Z GRILLS®

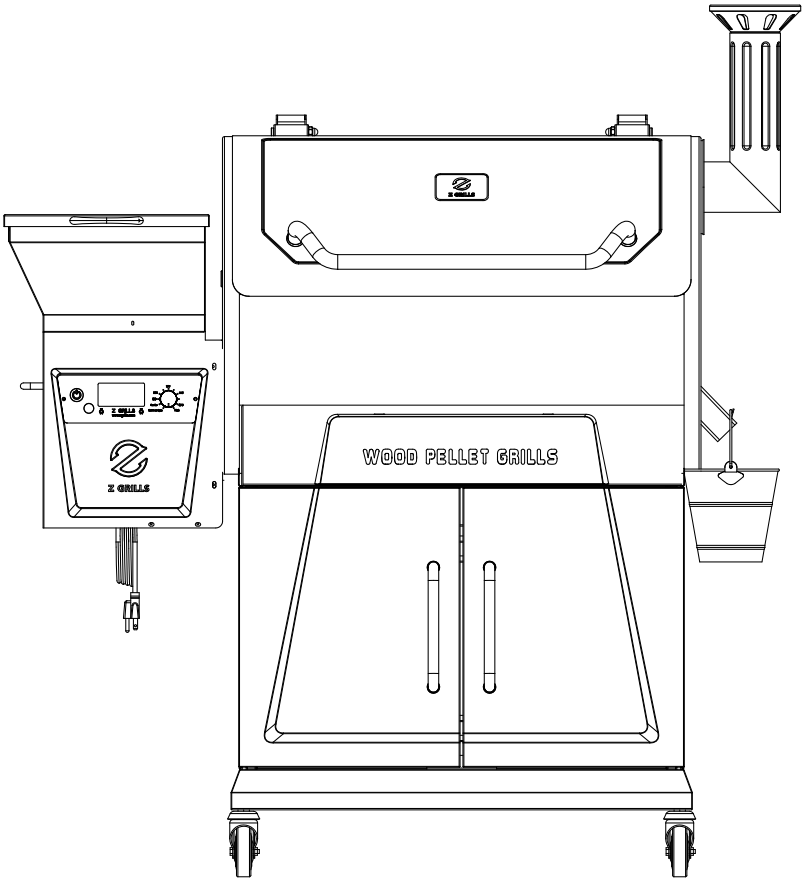

WOOD PELLET GRILLS

ZPG-700D3/ZPG-700D6

OWNER'S MANUAL

MON TO FRI, 8:00 A.M. - 5:00 P.M. PACIFIC STANDARD TIME
SERVICE CONTACT: 1-833-947-4557/1-833-ZGRILLS
EMAIL: support@zgrills.com
WEBSITE: www.zgrills.com

VN052026

CONTENTS

IMPORTANT SAFETY INFO 3

COMPONENT LIST 6

ASSEMBLY INSTRUCTIONS 8

SUBSEQUENT START-UP 18

OPERATING TIPS 19

MAINTENANCE & CLEANING 20

TROUBLESHOOTING 22

DIGITAL THERMOSTAT CONTROL WIRING DIAGRAM 24

Z GRILLS SUPPORT 26

3-Y LIMITED WARRANTY 27

INITIAL FIRING INSTRUCTIONS

SAVE THIS MANUAL FOR FUTURE REFERENCE

IMPORTANT SAFETY INFO

GENERAL WARNINGS

Please read this entire manual before installation and use of the pellet fuel-burning appliance. Failure to follow these instructions could result in property damage, bodily injury or even death.

Contact local building or fire officials about restrictions and installation inspection requirements in your area.

This grill is for outdoor use only. DO NOT use it in any enclosed area.

DO NOT store or use combustible materials or liquids near this appliance.

Keep children away while it is in use.

Maintain a safe distance between your grill and any combustible material.

DO NOT move your grill while operating or while it is hot. Wait until the grill is completely cold.

If a grease fire occurs, turn “off” and leave lid closed until the fire is extinguished. DO NOT unplug the power cord. DO NOT throw water on it. DO NOT try to smother the fire.

Clean and maintain your grill after each use.

DO NOT use your grill on rainy days.

DO NOT touch any part of your grill while it is hot. Serious bodily injury could result.

We suggest the use of heat-resistant gloves when operating this grill.

We suggest that you should wrap the Grease Drain Pan with heavy-duty aluminum foil before using because it is easy to clean.

For convenient and safe assembly, use at least two people to assemble the grill.

Make sure the power cord is disconnected before performing any service or maintenance.

DO NOT place anything heavy on top of hopper lid. It is not a shelf and is a tip hazard.

Never use gasoline, gasoline-type lantern fuel, kerosene, charcoal lighter fluid, or similar liquids to start or 'freshen up' a fire in this appliance. Keep all such liquids well away from the appliance when in use.

Do not use accessories not specified for use with this appliance.

NOTE: A MAJOR CAUSE OF FIRES IS FAILURE TO MAINTAIN REQUIRED CLEARANCES (AIR SPACES) TO COMBUSTIBLE MATERIALS. IT IS OF UTMOST IMPORTANCE THAT THIS PRODUCT BE INSTALLED ONLY IN ACCORDANCE WITH THESE INSTRUCTIONS.

PELLET RESTRICTIONS

This grill is designed for use of wood pellets only designed for burning in wood pellet grills. Do Not Use Pellet Fuel Labeled As Having Additives.

We suggest that you use Z GRILLS BBQ WOOD PELLETS, which are specifically made to work in our grills. There is no guarantee that other brands of pellets are suitable for use in Z GRILLS. And Z GRILLS assumes no liability for any loss, damage or injury caused by the use of any other brands of pellets.

Always keep the Pellet Hopper dry, the wood pellets will expand greatly, break apart and even jam the feed system if the pellets get wet or are exposed to high humidity.

CARBON MONOXIDE WARNING

Follow these guidelines to prevent this colorless, odorless gas from poisoning you, your family or others.

Know the symptoms of carbon monoxide poisoning: headache, dizziness, weakness, nausea, vomiting, sleepiness, and confusion. Carbon monoxide reduces the blood's ability to carry oxygen. Low blood oxygen levels can result in loss of consciousness and death.

See a doctor if you or others develop cold or flu-like symptoms while cooking or in the vicinity of this appliance. Carbon monoxide poisoning, which can easily be mistaken for a cold or flu, is often detected too late.

Alcohol consumption and drug use increase the effects of carbon monoxide poisoning.

Carbon monoxide is especially toxic to mother and child during pregnancy, infants, the elderly, smokers, and people with blood or circulatory system problems, such as anemia, or heart disease.

COMPONENT LIST

ITEM	QTY	DESCRIPTION
1	1	Grill Chamber Assembly
2	1	Hopper Bottom Assembly
3	1	Body Frame
4	1	Thermal Baffle
5	1	Heat Baffle
6	1	Grease Drain Pan
7	1	Warming Rack
8	2	Porcelain Grills
9	1	Lid
10	2	Hinge Assembly
11	1	Lid Handle
12	2	Lid Handle Base
13	1	RTD Temperature Probe
14	1	Chimney Cap Assembly
15	1	Smoke Stack Assembly
16	1	Smoke Stack Gasket
17	1	Grease Bucket
18	1	Hopper Burner Lid
19	1	Upper Hopper Safety Grate
20	1	Digital Control
21	1	Hopper Shell
22	1	Low er Hopper Safety Grate
23	1	Auger Drive Motor
24	1	Nylon Collar
25	1	Auger
26	1	Hot Rod(Ignitor)
27	1	Firepot Assembly
28	1	Feeder Assembly
29	1	Hopper Burner Gasket

ITEM	QTY	DESCRIPTION
30	1	Fan
31	1	Pow er Cord
32	1	Cable Clip
33	1	Beam
34	4	Magnet
35	1	Left Door Upper Pivot
36	2	Bottom Pivot
37	1	Left Door
38	1	Right Door Upper Pivot
39	1	Left Plate
40	1	Magnet Fixing Plate
41	2	Door Handle
42	4	Door Handle Base
43	1	Back Plate
44	1	Right Plate
45	1	Right Door
46	1	Hopper Top Assembly I
47	2	Wheels(w ithout brake)
48	2	Wheels(w ith brake)
49	1	Bottom shelf
50	1	Decorating Plate
51	1	Pellet Cleanout Door
52	2	Hinge Axle
53	1	Nameplate
54	1	Firepot shell
55	2	Meat Probe
56	1	Hopper Top Assembly II
57	1	Feeder seal strip
58	1	Butterfly screw

HARDWARE PACKAGE LIST

ITEM	QTY	DESCRIPTION
A	1	Hopper Burner Handle
B	18	Bolt 1/4-20*1/2
C	6	Hexagon Bolt 1/4-20*1/2
D	12	Gasket (OD0.75*ID0.25)
E	2	Hexagon Nut 1/4-20
F	2	Gasket (OD0.5*ID0.2)

ITEM	QTY	DESCRIPTION
G	2	Bolt 5/32-32*1/5
H	2	Open End Wrench
I	6	Bolt 8#-32*3/8
J	4	Hexagon Kep Nut 5/32-32
K	1	Screwdriver
L	6	Hexagon Bolt 1/4-20*3/4

ASSEMBLY INSTRUCTIONS

PARTS DIAGRAM

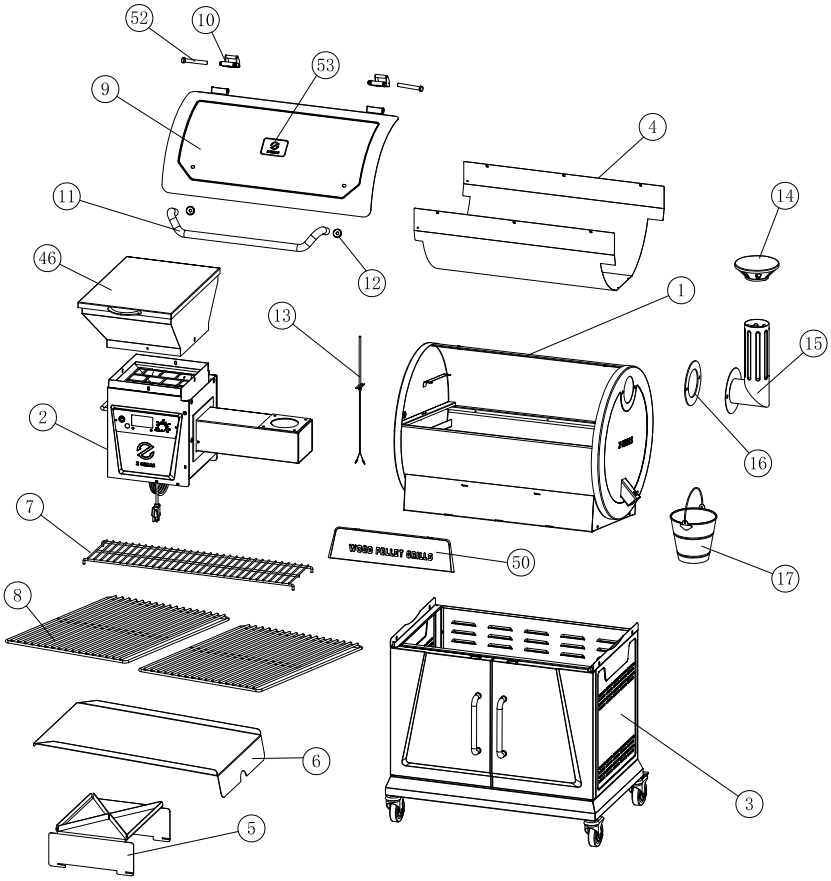

HOPPER BURNER ASSEMBLY

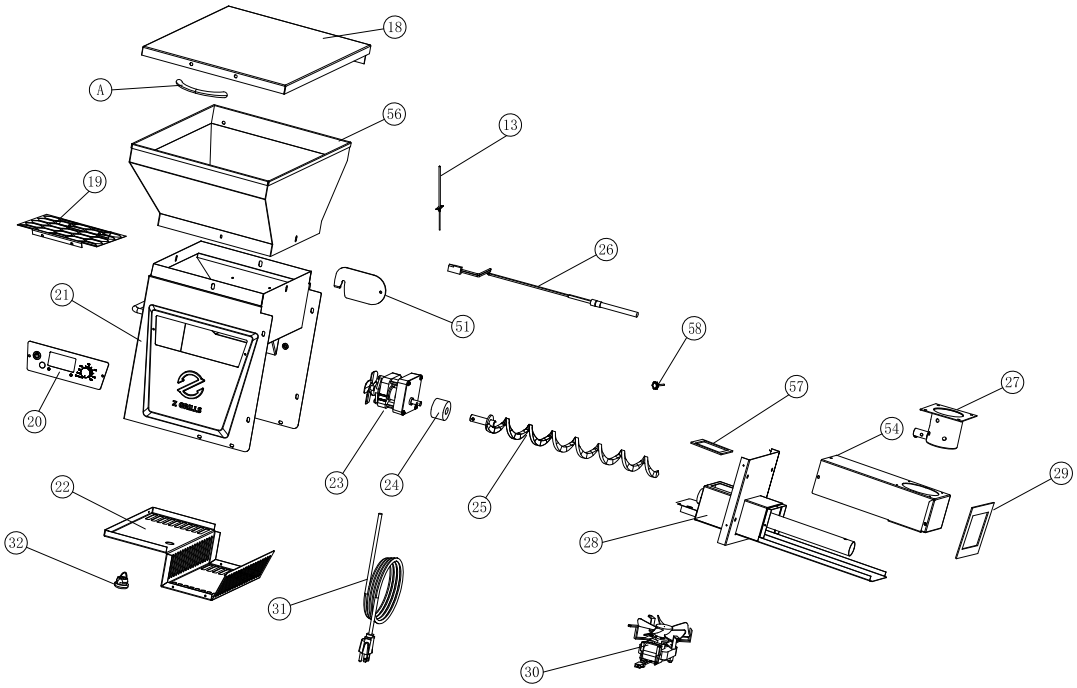

BODY FRAME ASSEMBLY

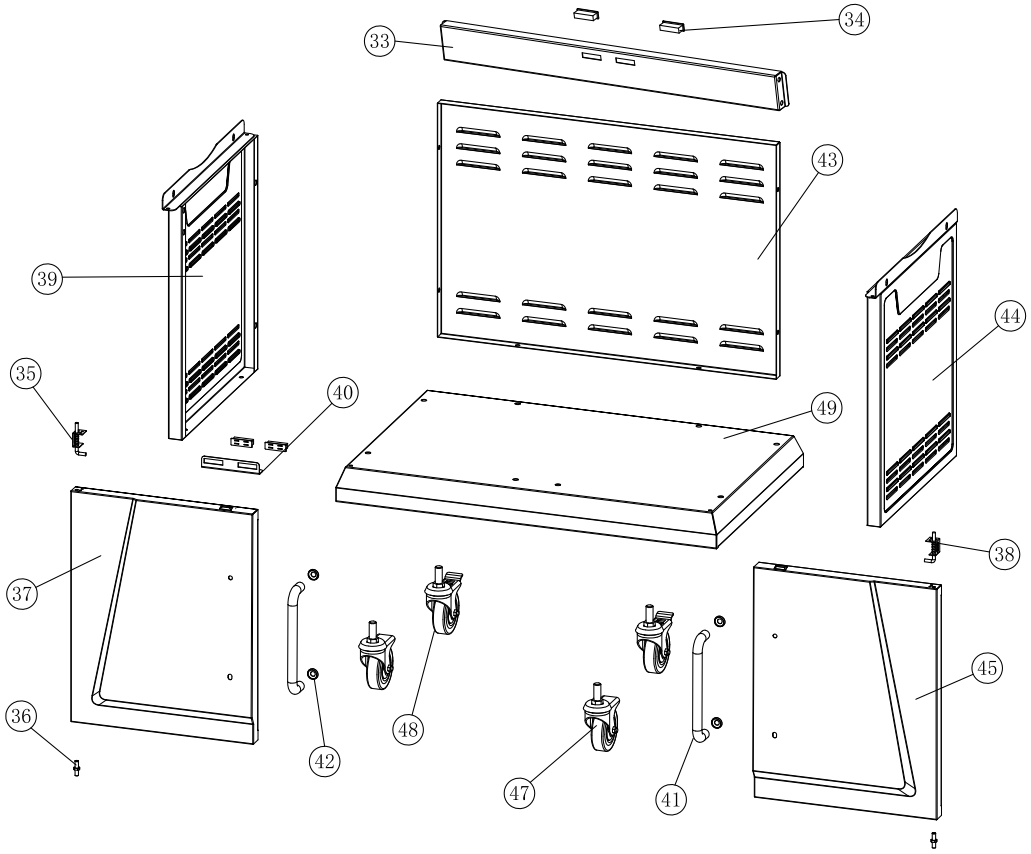

1.ASSEMBLING OF BOTTOM BASE

1.Turn the Platform (49) upside down. Install the wheels (without brake)(47) in the screw holes. Tighten with wrench (H). Note: The 2 wheels (without brake)(47) should be installed on the side near the magnet base. Install the wheels (with brake)(48) into the screw holes. Tighten with wrench (H). Note: The 2 wheels (with brake)(48) should be installed on the other side.
2.Use the screws (I) and assemble the magnet fixing plate (40) in the original position.
3.Clip the magnets (34) into the square holes in the magnet fixing plate (40).

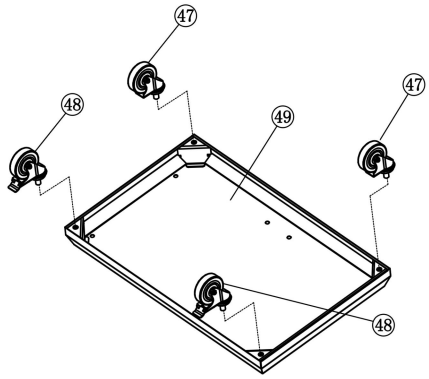

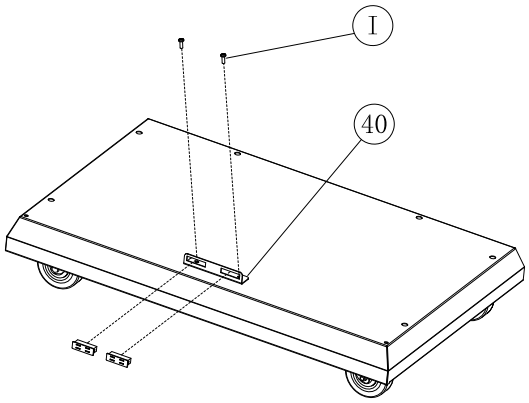

2.MOUNTING THE BODY FRAME

1.Secure Left Plate (39) on the Platform (49) with Bolt (B).
2.Secure Right Plate (44) on the Platform (49) with Bolt (B).
3.Secure Back Plate (43) on the Platform (49) with Bolt (B) and connect to Left Plate (39) and Right Plate (44).
4. Attach the Beam (33) between Left Plate (39) and Right Plate (44) with Bolt (B).

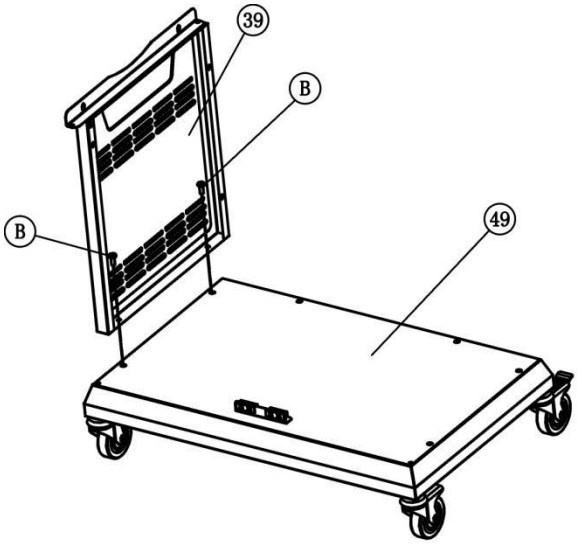

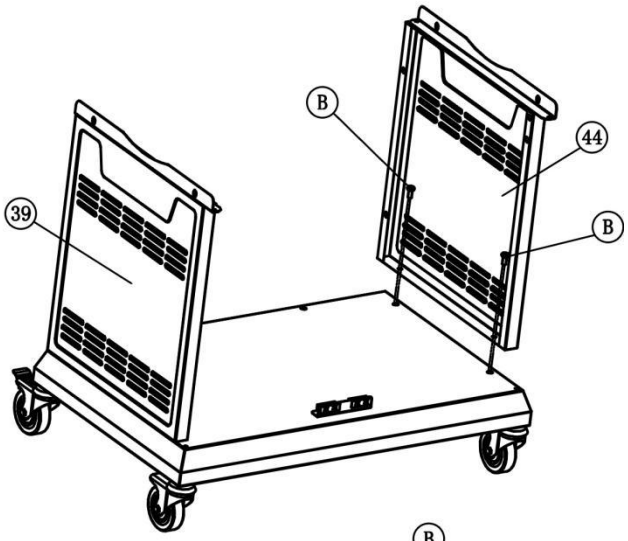

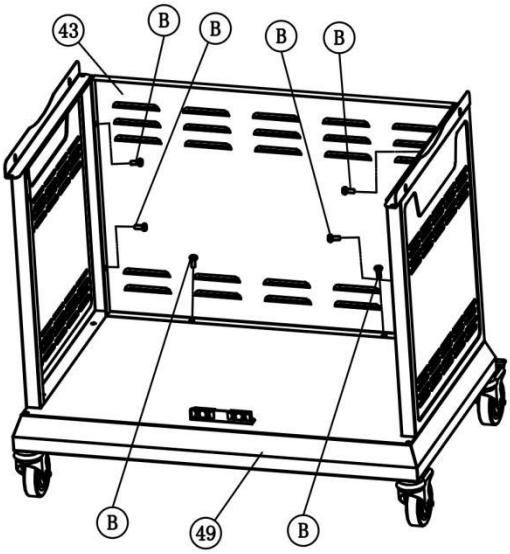

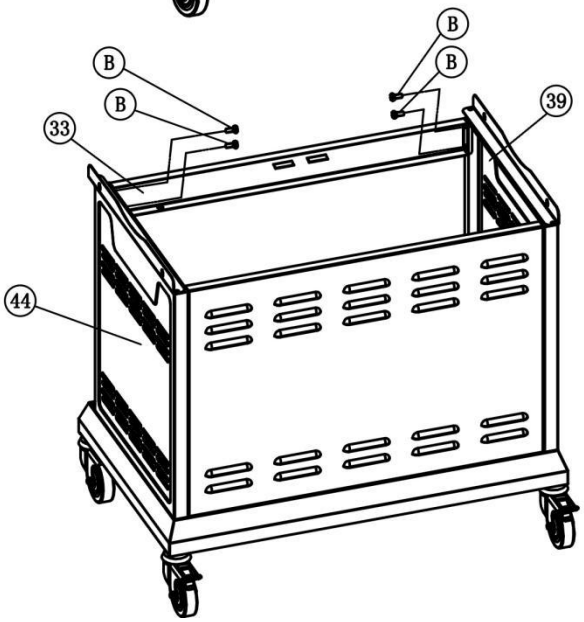

3.ASSEMBLING OF HOPPER

Insert Hopper Top Assembly I (46) into Hopper Bottom Assembly (2), align the holes. Make sure hopper opens to the front (control side). Insert the Bolts (I) through the holes in the Hopper and Kep Nuts (J), then open the Hopper Lid and tighten it from inside. The four sides are installed in the same way.

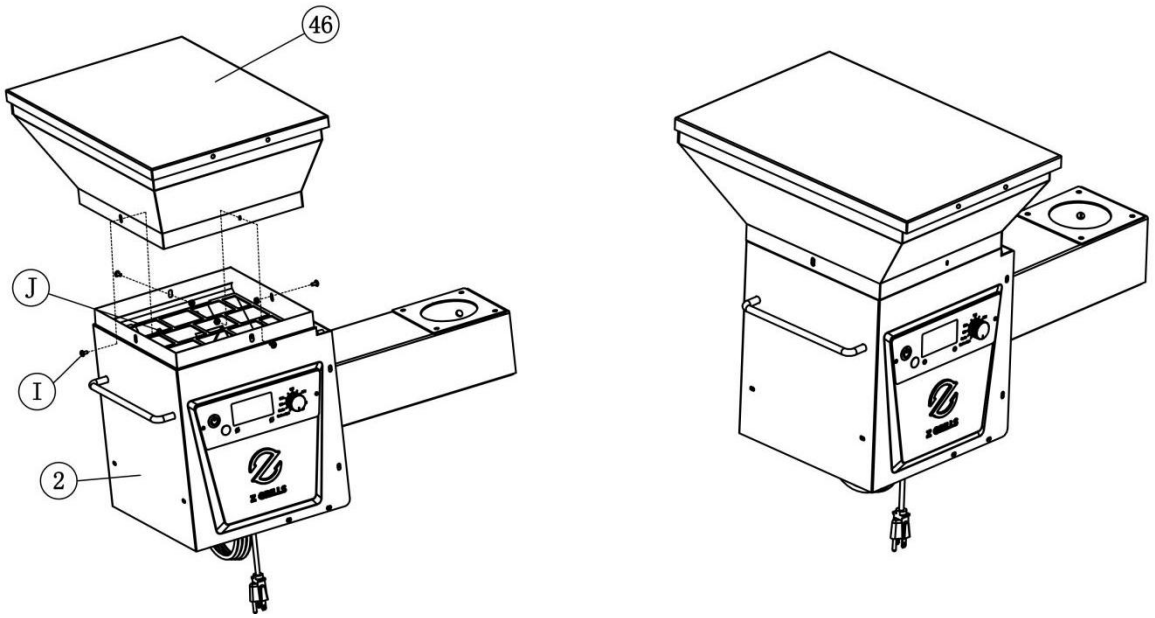

★Usage of Pellet Cleanout Door

Note: The Hopper is equipped on the back with a Pellet Cleanout Door to clear the hopper of unused pellets so as to replace with fresh pellets or pellets of a different smoking flavor.

1. Place a bucket or bowl below cleanout door to capture falling pellets.
2. Turn cleanout door Butterfly screw counterclockwise to unlock door, and pellets will fall through cleanout chute. (Don’t remove the Butterfly screw completely.)
3. Once pellets have dispensed through chute, lower the door down. Turn Butterfly screw clockwise to lock door.

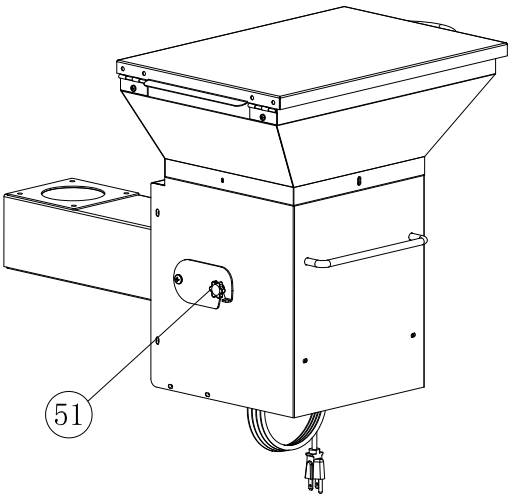

4.POSITIONING THE CHAMBER ON THE BODY FRAME

Lift up the Chamber (1) on the Body Frame (3). Make sure that the Chamber (1) is inside the left and right plate of the Frame (3). Align the Chamber holes with the plate holes and secure with Bolt (B).

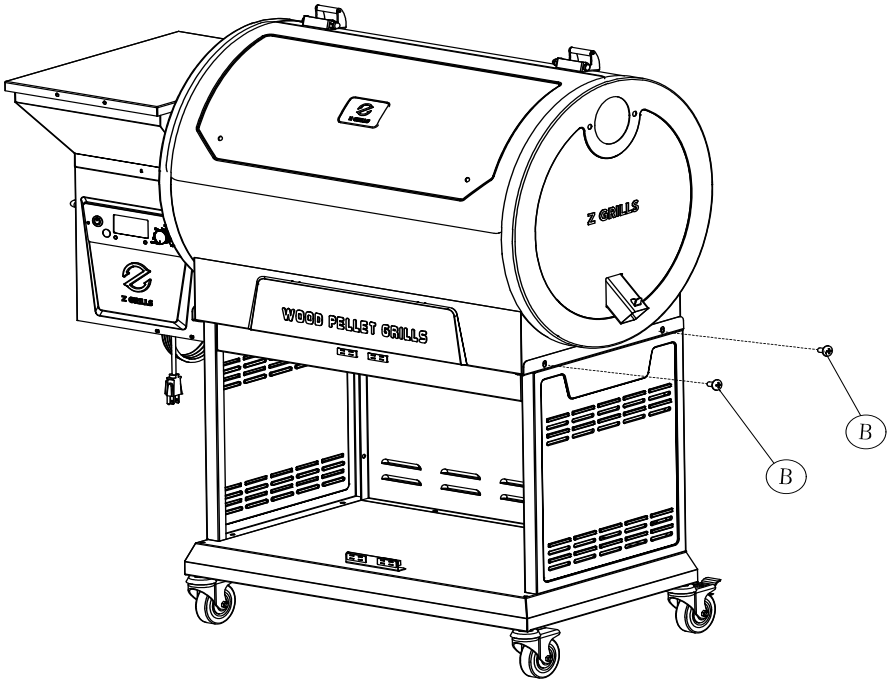

5.Installation instructions for RTD Temperature Probe

1.Remove the screws from the left plate of the grill chamber.
2.Use the screws through the RTD Temperature Probe and fix on the left plate of the grill chamber.
3.The distance between the RTD Temperature Probe and the left panel of the grill chamber should be kept about 14mm, otherwise the RTD Temperature Probe effect will be affected.

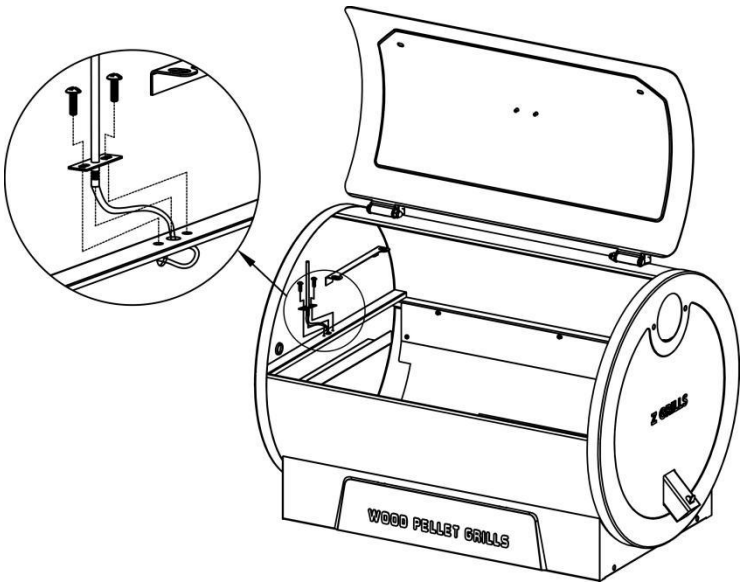

6.MOUNTING THE HOPPER TO THE CHAMBER

1.Open the Lid, insert the Hopper into the Chamber, then using these Bolts(L) and Gaskets(D) install it in sequence from inside.
2. Locate the RTD plug-in connector coming from the mounted RTD inside the grill frame. Connect this with the mating connector located on the outside of the hopper burner assembly. NOTE: excess wire on the RTD plug should remain outside the Chamber.

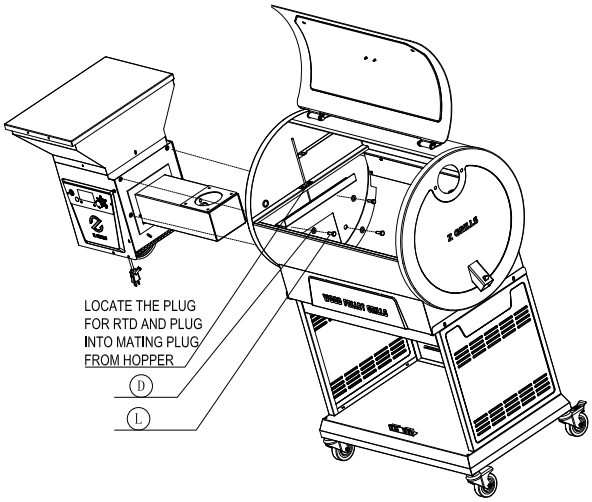

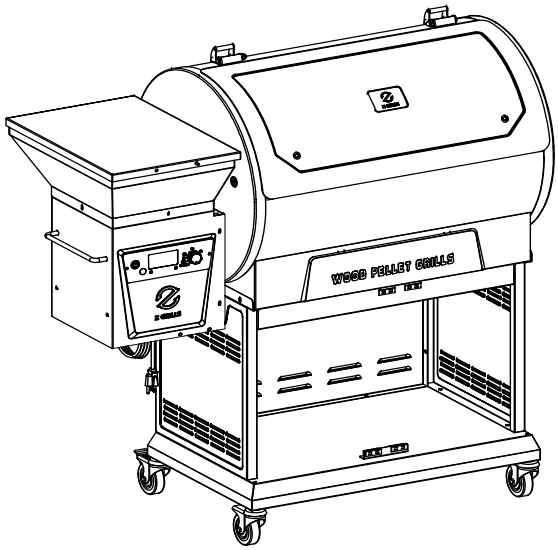

7.ATTACHING THE HOPPER BURNER LID DOOR HANDLE

Keep the Hopper Burner Lid (18) open. Insert the Bolt (G) into Gasket (F) and the hole on the Hopper Burner Lid (18) from inside. Hopper Lid Handle (A) from the outside and tighten the Bolts (G) with screwdriver (K), as shown.

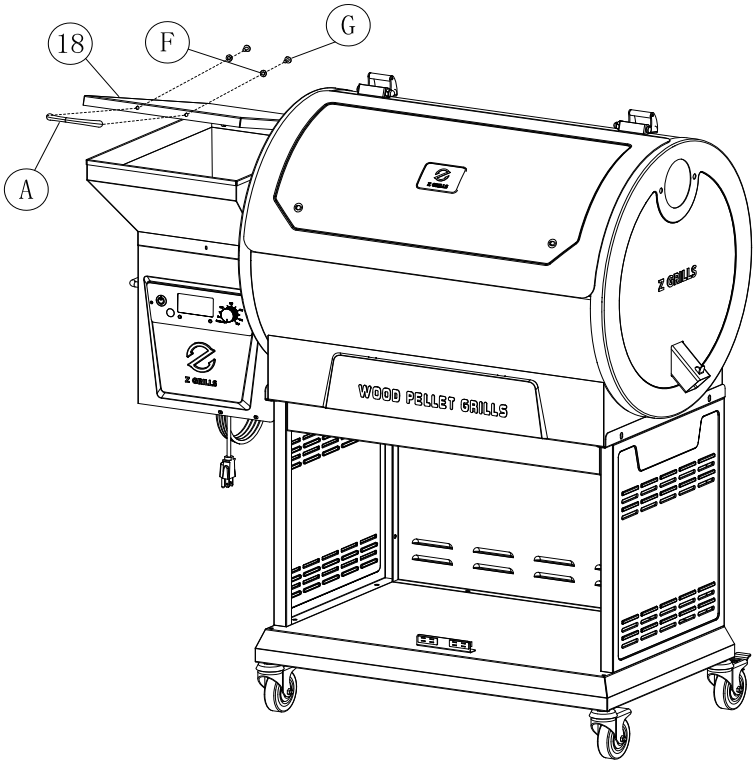

8.ATTACHING THE CHAMBER DOOR HANDLE

Insert Hexagon Bolt (L) through Gasket (D), Lid (9) and Handle Base (12) directly to the handle (11) and tighten up. Do not over-tighten.

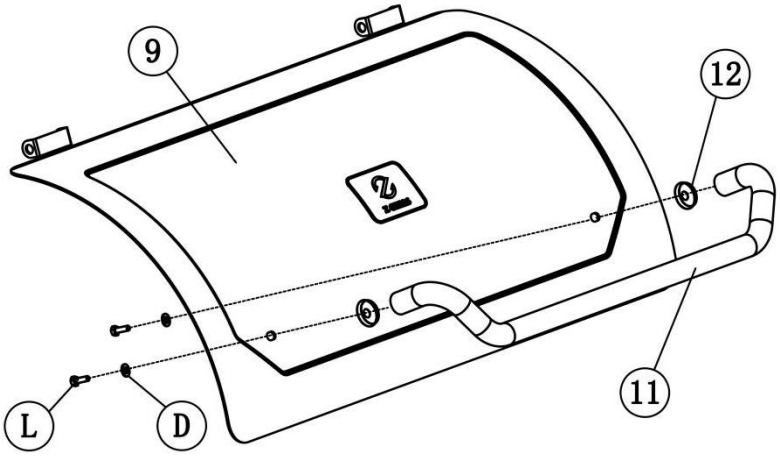

9.ATTACHING THE SMOKE STACK AND CHIMNEY CAP

1.Install the Chimney Cap (14) to Smoke Stack (15).Note that the Chimney Cap (14) is vertical and then tighten.
2. Align the holes in the Smoke Stack (15) with holes in the Smoke Stack Gasket (16), which fits between right end of the Grill and the Smoke Stack (15). Insert the Hexagon Bolts (C) through the holes in the Smoke Stack (15) and the Smoke Stack Gasket (16).Place a Gasket (D) on each Bolt and secure with Hexagon Nut (E).

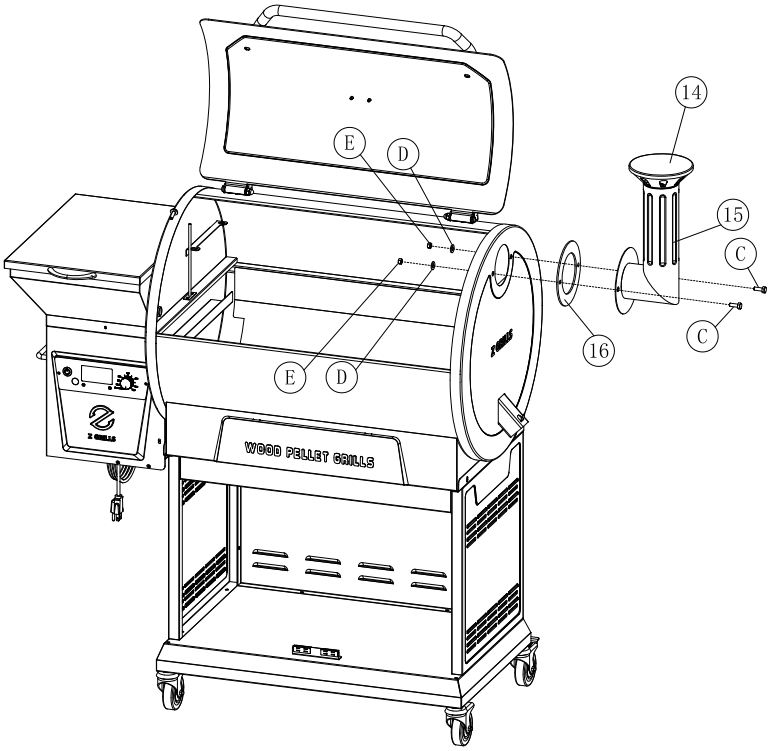

10.POSITIONING THE DOOR HANDLE

Align the holes in the Left Door (37) with the holes in the Handle (41). Insert Hexagon Bolt (C) through the Gasket (D), Left Door (37) and Door Handle Base (42) to Door Handle (41). Use the wrench to tighten. Repeat the former step to assemble the Right Door (45).

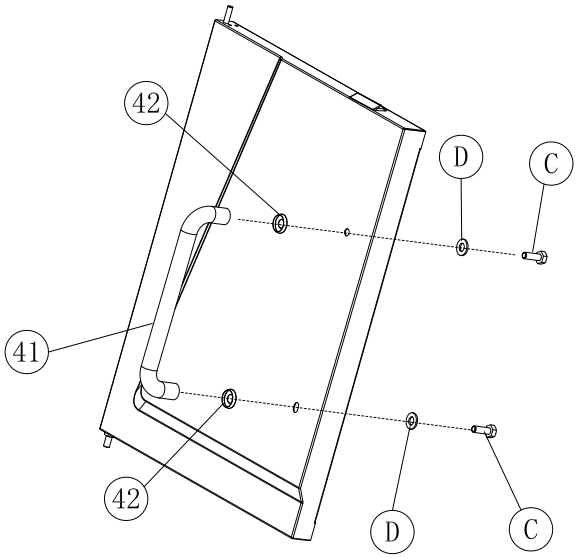

11.POSITIONING THE DOOR

1.Take the Right Door (45) with handle assembled. First insert the Bottom Pivot (36) into the small hole on Platform (49).Then pull down the Right Door Upper Pivot (38) until the upper end is aligned with top edge of the door. Then align the Right Door Upper Pivot (38) with the upper hole and pull up the pivot to secure the door.
2.Repeat Step 1 to secure the Left Door (37). Make a proper adjustment until the doors can be firmly closed.

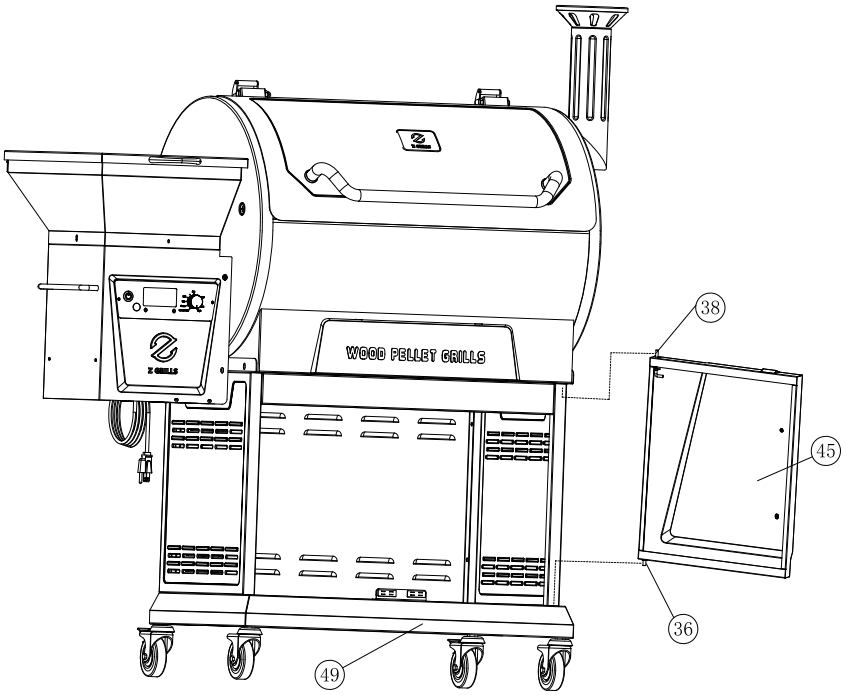

12.POSITIONING THE HEAT BAFFLE

Position The Heat Baffle (5) on the locating brackets which is on the inside walls of the Grill. The notched legs should be facing downward. Slide Heat Baffle (5) to the right to lock in place.

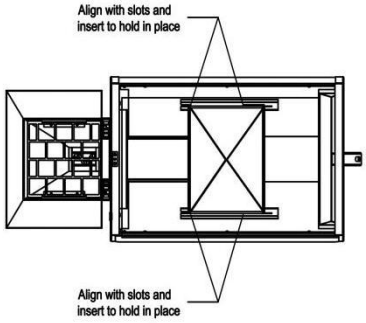

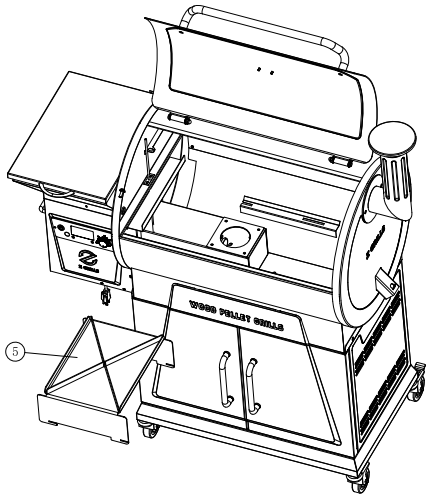

13.POSITIONING THE GREASE DRAIN PAN

Position The Grease Drain Pan (6) over the Firepot (27) by fitting over the bracket on the left side of grill wall. The notched leg of the Grease Drain Pan should be facing downward directly over the hole to the Grease Basket to fit onto the locating brackets so that the grease can flow into the Grease Drain Tube . If installed correctly the Grease Drain Pan should be lower on the right side to allow the grease to drain into the Grease Drain Tube.

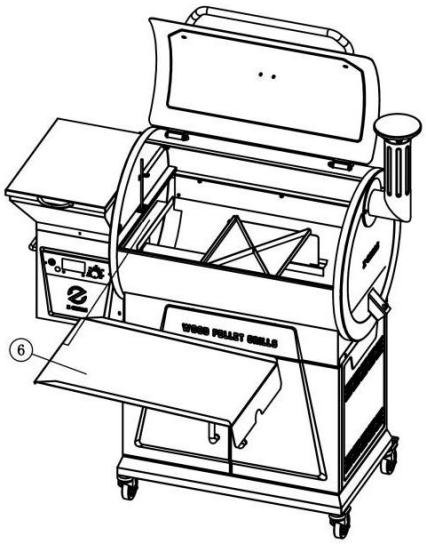

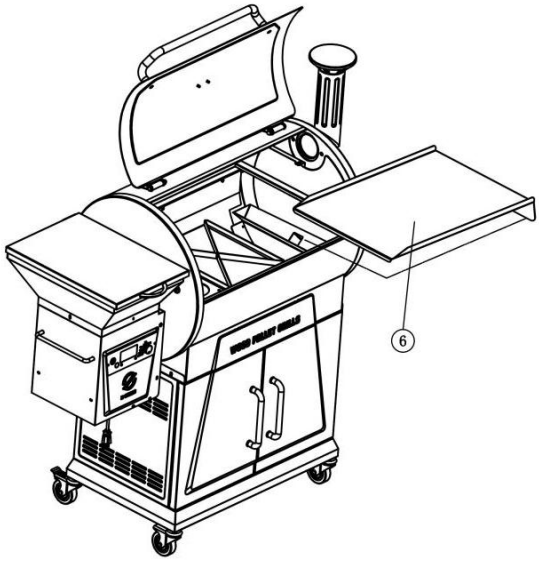

14.POSITIONING THE PORCELAIN GRILL AND WARMING RACK

Position the Porcelain Grill (8) inside the chamber. Install the Warming Rack (7) on the rack supports inside the chamber.

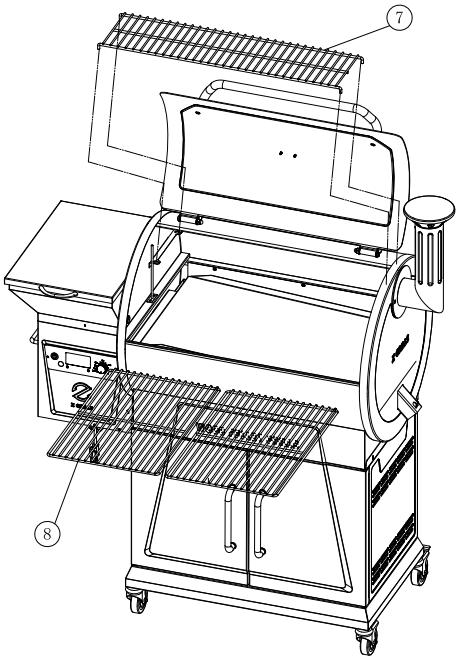

15.HANG ON THE GREASE BUCKET

Locate the Grease Drain Tube which is on the right side of the chamber, then hang the Grease Bucket (17) on the hook.

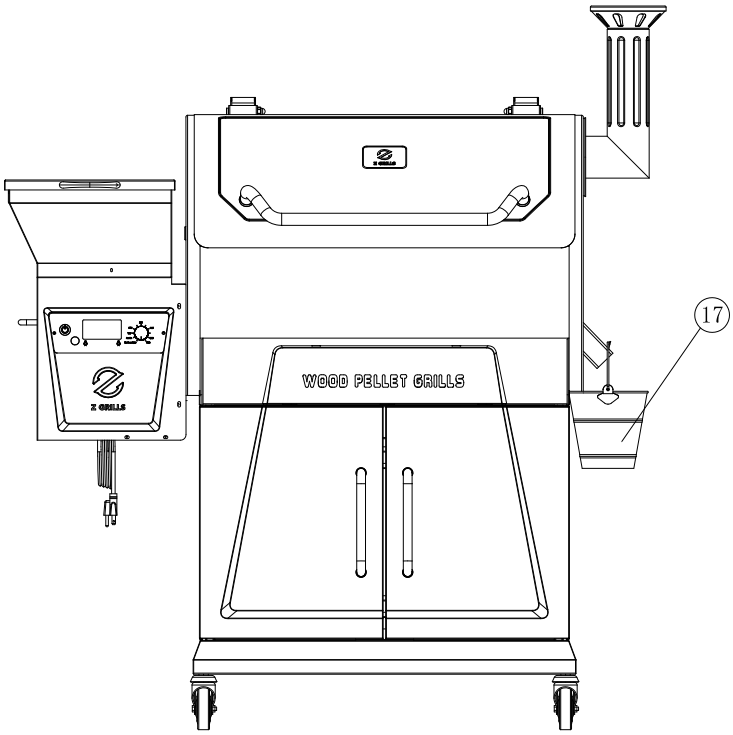

SUBSEQUENT START-UP

ATTENTION: If the grill fails to light or the fire in the Firepot goes out while cooking, it is vital to follow these steps when sufficient pellets are still in the Pellet Hopper. Failure to follow the steps may cause a hazardous “over-firing” of your grill due to an excess of unburned pellets in the Firepot.

1.Turn OFF the appliance and unplug the Power Cord. After the grill cools down, remove all food, the Porcelain Grills, Grease Drain Pan and the Heat Baffle.

2.Remove all unburned pellets and ash from inside and around the Firepot (See instruction for proper handling and disposal of ash).

3.Plug the Power Cord and turn on the grill. Pellets should fall into the Firepot and the Hot Rod should begin to heat (it will start to turn red).

4.If this step is successful, you will see flames come out of the Firepot.

Then turn the Temperature Dial to SHUT DOWN CYCLE and let it cool down. Next, put components back in place, open the lid and turn the Temperature Dial to SMOKE. Wait a few minutes until you see whitish-gray smoke coming out of the grill, then close the lid and turn the Temperature Dial to any cooking setting desired.

5.If this step is not successful, see TROUBLESHOOTING or contact Z GRILLS Technical Support to help diagnose the problem.

SHUTDOWN CYCLE

- Auger turns off
- Fan continues to run for 10 minutes

After you have finished cooking, turn the Temperature Dial to Shutdown Cycle position. The function of this setting is to leave the Draft Induction Fan running for 10 minutes to burn redundant pellets in the firepot. After the fan runs for 10 minutes, the fan will stop and the controller will power off.

CAUTION: The main power switch will shut the power off to the controller and the Temperature Dial Knob switch will cut off power to the grill components only. When servicing the controller or any parts ensure that the power supply is disconnected by unplugging the grill to avoid a shock hazard.

OPERATING TIPS

1.Like all grills, the actual temperature of this grill and the cooking times will be affected by external temperature, humidity, wind conditions, quality of pellets, etc.

2.It is beneficial to shelter your grill from the wind. This will aid in temperature output, heat retention and heat recovery time when the lid is open.

3.Do not open the lid frequently, it will increase your cooking time. You can open the lid when you want the grill to cool down quickly.

4.Please preheat the grill for 10 minutes before adding food. This will allow your grill to heat up quickly and return to your desired temperature once food is added.

5.Never move your grill while in use.

6.Never put water into the Pellet Hopper or Firepot.

7.**WARNING: NEVER ADD PELLETS TO THE FIREPOT DIRECTLY. IT IS DANGEROUS.** If you run out of pellets and lose your fire while cooking, let the grill cool down and start again with the INITIAL FIRING INSTRUCTIONS.

8.We recommend you cover your Grease Drain Pan with heavy-duty aluminum foil and change it frequently. This is the simplest way to clean your Grease Drain Pan. Failure to clean the Grease Drain Pan, V-shaped Grease Drain and Grease Drain Tube may cause grease fires. If this situation happens, turn the Temperature Dial to SHUT DOWN CYCLE and keep the lid open until the fire is completely out. AT THE SAME TIME, BE CAREFUL NOT TO BURN YOURSELF. When the grill is completely cool, clean any grease accumulation from the V-shaped Grease Drain and the Grease Drain Pan. Replace the foil on the Grease Drain Pan. Then restart the grill and resume cooking.

MAINTENANCE & CLEANING

Your Z GRILL requires regular maintenance.

Make sure your grill is OFF, unplugged and completely cold before performing any maintenance and cleaning.

Grease

1.With regular use your grill will accumulate grease on the Flue Lining, the Grease Drain Tube, the V-shaped Grease Drain and the Grease Drain Pan. Always be sure these areas are clean and free of grease and debris. You should check and clean these areas regularly to reduce the risk of fire.

2.It is easier to remove accumulated grease when the grill is still warm (not hot).

BE CAREFUL NOT TO BURN YOURSELF. Heat-resistant gloves are recommended.

If too much grease is allowed to build up in the V-shaped Grease Drain or is allowed to plug the Grease Drain Tube, a grease fire could result. It is necessary to clean these area regularly. You can scarp the grease accumulation from inside the V-shaped Grease Drain and Grease Drain Tube by using a stiff, nonmetallic tool. Much of the loosened grease can be pushed down through the Grease Drain Tube and fall into the Grease Bucket. Wipe up remaining grease residue with paper towels or disposable rags.

Flue Pipe(Smoke Stack)

Remove the Chimney Cap Assembly, clean it with warm soapy water. Scrape the creosote and grease accumulation from inside of the vertical and horizontal sections of the Flue Pipe by using a stiff, nonmetallic tool such as a wooden paint stir stick. Once the creosote and grease residue has been loosened from the Flue Pipe Lining, much of it can be cleaned with paper towels or disposable rags. Do not spray water or other liquid cleaners onto the inside of the grill.

Outside surfaces

1.Use warm soapy water to wipe away grease. Do not use oven cleaner, abrasive cleansers or abrasive cleaning pads on the outside grill surfaces.

2.It is highly recommended that you use Z GRILLS Cover to protect your grill .

3.You can use a high-quality car wax on the outside surfaces of your grill to protect it’s finish.

Internal component

1.To clean the Porcelain-coated Grill Grates we recommend using a long-handled cleaning brush designed for Porcelain-coated Grates.

2.It is recommended that you clean your Grill Grates after each use.

3.Clean the inner RTD temperature probe after each use.

Ash

Clean the ash from the interior of the grill periodically. If excessive ash is in the firepot, it may cause the fire to go out. This is especially true in the SMOKE setting. A shop vac is an excellent tool to use for removing the ash. **WARNING: MAKE SURE THE GRILL FIRE IS OUT, THE UNIT IS OFF, UNPLUGGED AND COLD BEFORE ATTEMPTING TO CLEAN ASH FROM THE GRILL.**

TROUBLESHOOTING

CAUTION: Make sure the grill is completely cool and unplugged before you do any inspection, cleaning, maintenance or service work.

Problem	Potential Cause	Solution
Grill does not work properly	Power	Make sure the power cord is plugged in. Verify there is power at the electrical outlet.
	Fuse	Remove the digital control, check the fuse on the back. Replace the fuse if blown.
	Hot Rod	If both of the Draft Inducer Fan and the Auger Driver Motor are operating, the Hot Rod needs to be replaced. If one or both are not operating, please contact customer support.
	Wires & Connections	Check the wires and connectors to make sure they are fastened securely and not damaged. Contact customer support if you need help.
	Auger Drive Motor	Locate the small fan motor blade on the back of the auger drive motor. Turn unit on. If the fan does not turn on then the Auger Drive Motor needs to be replaced.
Fire goes out	Too much ash	Clean the ash. Refer to MAINTENANCE & CLEANING.
How to start	SMOKE setting	Start your grill on the SMOKE setting with the lid open. After 5 minutes, close the lid and turn to any temperature setting desired. Read the INITIAL FIRING INSTRUCTIONS carefully.

Unexpected grill temperature is displayed	External Factor	Grill temperature is influenced by environmental factors such as high temperature, wind and direct sun. Place unit in shaded area. Open the lid to reduce inside temperature. After start your grill in 40 minutes, the grill will reach your desired temperature.
Excess or discolored smoke	Pellets	Replace moist pellets with fresh dry pellets.
Get your new parts	Contact Z GRILLS Customer Service or your Z GRILLS dealer to place an order	When contacting customer support please have the following information available: Your authorized Z Grills dealer, your name, phone number, address, your Z Grill serial number and part identification number. Your part number is listed on the COMPONENT LIST.

ERROR CODES

LEr (Low Temperature Alarm)

- Grill temperature was below 120℉ for more than 20 minutes.

Solution

Turn the Temperature dial to SHUT DOWN CYCLE, then you can turn the Temperature Dial to any cooking temperature desired.

HEr (High Temperature Alarm)

- Grill temperature reached 550℉.

Solution

Turn the Temperature dial to SHUT DOWN CYCLE.Open the Lid and let the grill cool down for 5-10minutes.Then you can turn the Temperature Dial to any cooking temperature desired.

Er 1

- Ensure temperature probe is properly connected to the controller board.

Er 2

- Temperature dial security alarm.

Turn the Temperature dial to SHUT DOWN CYCLE, turn off the grill and then turn it on. Then you can turn the Temperature Dial to any cooking temperature desired.

Er 3

- Temperature dial security alarm.

The ignition was successful, and the temperature rose .When the temperature dropped below 120℉ for more than 6 minutes and out of pellets , then the alarm was called Er 3. The method is the same as Er2.

WARNING: DO NOT TURN OFF THE SWITCH WHILE THE FAN IS STILL WORKING ON THE SHUT DOWN CYCLE, THE GRILL WILL AUTOMATICALLY SHUT OFF WHEN THE CYCLE IS DONE. INTERRUPTION OF THE SHUT DOWN CYCLE COULD RESULT IN A FIRE IN THE HOPPER CHAMBER.

Unexpected grill temperature is displayed	External Factor	Grill temperature is influenced by environmental factors such as high temperature, wind and direct sun. Place unit in shaded area. Open the lid to reduce inside temperature. After start your grill in 40 minutes, the grill will reach your desired temperature.
Excess or discolored smoke	Pellets	Replace moist pellets with fresh dry pellets.
Get your new parts	Contact Z GRILLS Customer Service or your Z GRILLS dealer to place an order	When contacting customer support please have the following information available: Your authorized Z Grills dealer, your name, phone number, address, your Z Grill serial number and part identification number. Your part number is listed on the COMPONENT LIST.

ERROR CODES

LEr (Low Temperature Alarm)

- Grill temperature was below 120℉ for more than 20 minutes.

Solution

Turn the Temperature dial to SHUT DOWN CYCLE, then you can turn the Temperature Dial to any cooking temperature desired.

HEr (High Temperature Alarm)

- Grill temperature reached 550℉.

Solution

Turn the Temperature dial to SHUT DOWN CYCLE.Open the Lid and let the grill cool down for 5-10minutes.Then you can turn the Temperature Dial to any cooking temperature desired.

Er 1

- Ensure temperature probe is properly connected to the controller board.

Er 2

- Temperature dial security alarm.

Turn the Temperature dial to SHUT DOWN CYCLE, turn off the grill and then turn it on. Then you can turn the Temperature Dial to any cooking temperature desired.

Er 3

- Temperature dial security alarm.

The ignition was successful, and the temperature rose .When the temperature dropped below 120℉ for more than 6 minutes and out of pellets , then the alarm was called Er 3. The method is the same as Er2.

WARNING: DO NOT TURN OFF THE SWITCH WHILE THE FAN IS STILL WORKING ON THE SHUT DOWN CYCLE, THE GRILL WILL AUTOMATICALLY SHUT OFF WHEN THE CYCLE IS DONE. INTERRUPTION OF THE SHUT DOWN CYCLE COULD RESULT IN A FIRE IN THE HOPPER CHAMBER.

DIGITAL THERMOSTAT CONTROL

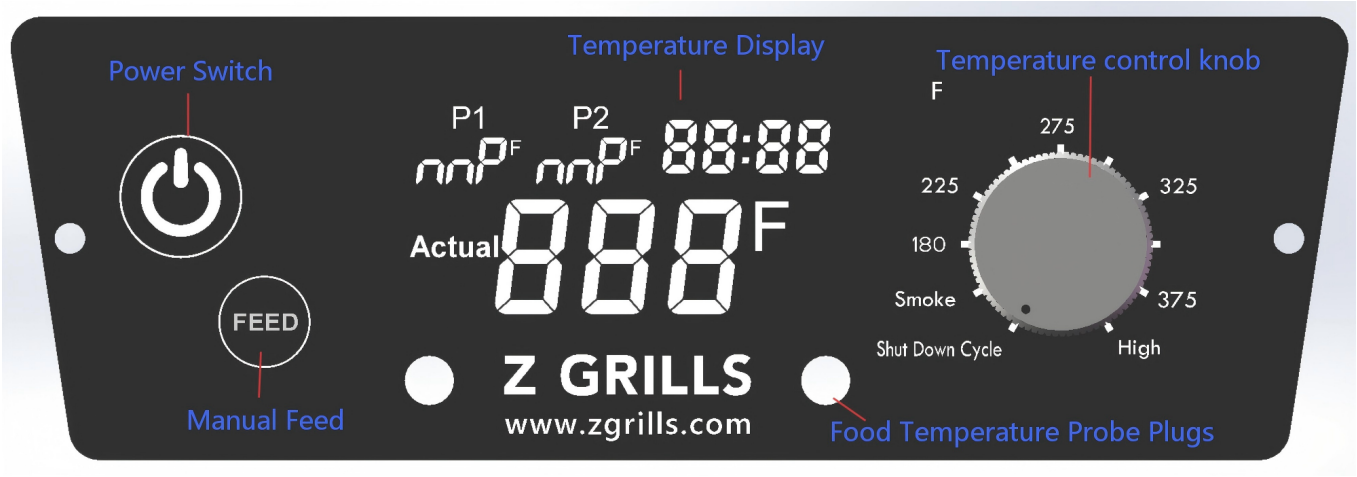

DIGITAL THERMOSTAT CONTROL WIRING DIAGRAM

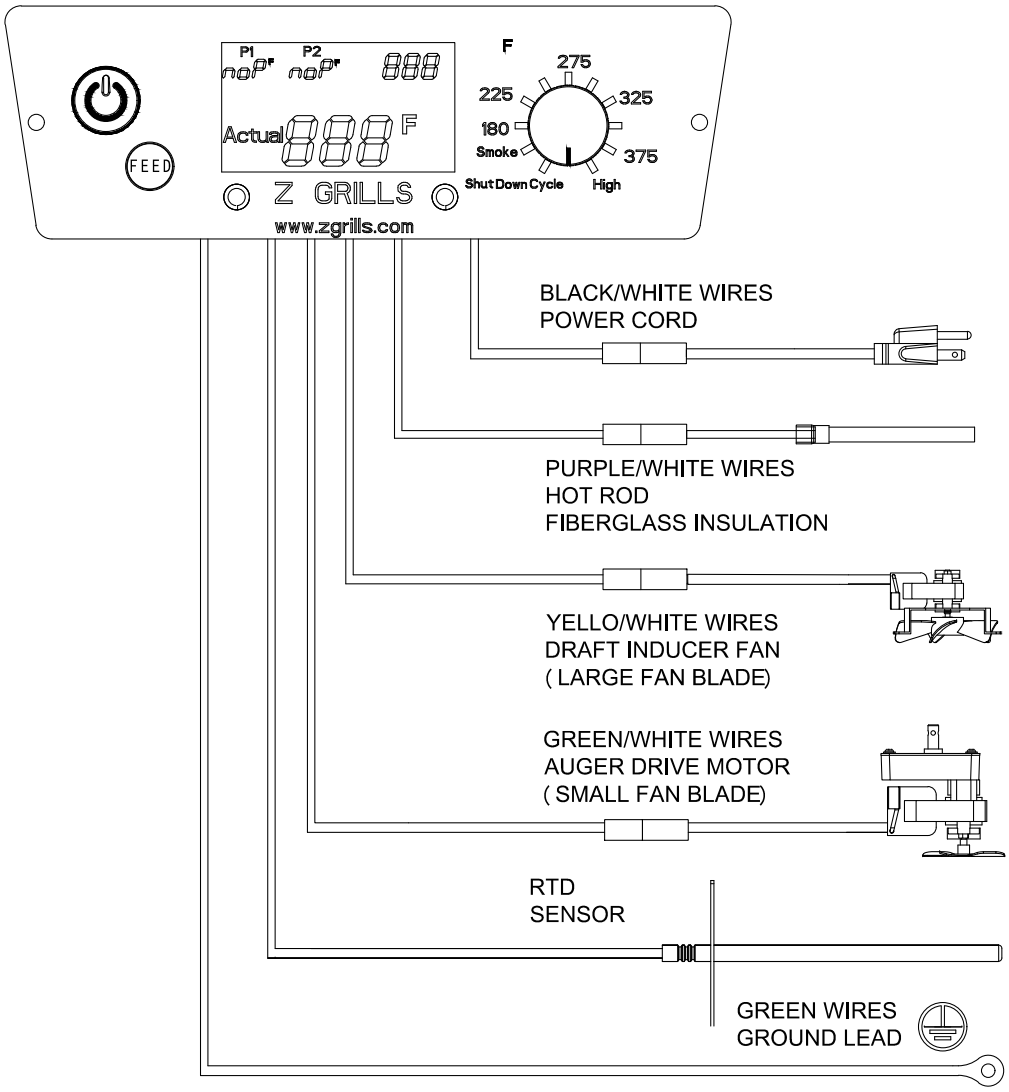

Usage of the Meat Probe

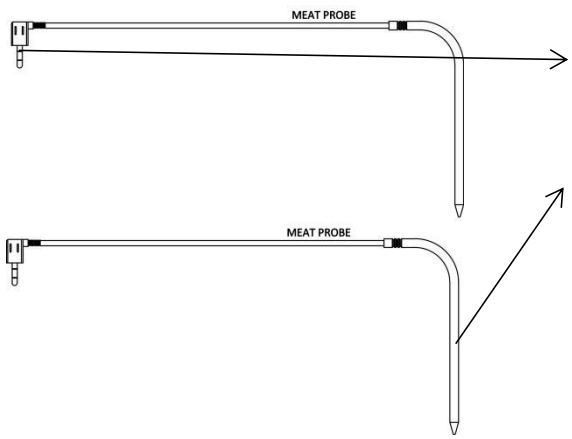

Put the plug of the Meat Probe into the control panel (PROBE1 or PROBE2)

Insert the Probe into the food to measure the temperature

The P1 temperature of the control panel is displayed as the temperature of PROBE1, while the P2 temp is displayed as the temp of PROBE2

Z GRILLS SUPPORT

Thank you for purchasing a Z GRILL!
If you have any question, please contact customer support or your Z GRILL dealer.
Z GRILLS, INC. offers the best technical and sales support in the industry.
When calling customer please be prepared to provide the following information:

1.Dealer's name and date of purchase
2.Purchaser's name, phone number and address
3.Z GRILLS model number, serial number and part identification numbers
4.Please be prepared to describe your problem accurately so we can help you resolve your issue
5.Providing pictures or videos is beneficial

Z GRILLS CUSTOMER SERVICE

MON TO FRI, 8:00 A.M. - 5:00 P.M. PACIFIC STANDARD TIME

SERVICE CONTACT: 1-833-947-4557/1-833-ZGRILLS

EMAIL: support@zgrills.com

WEBSITE: www.zgrills.com

Z GRILLS
3-YEAR LIMITED WARRANTY

Z GRILLS, Inc. provides a 3-year warranty from the date of purchase by the original owner. This warranty applies to defects in all materials and workmanship. During the warranty period, Z GRILLS, Inc. will at its option repair or replace defective parts or units.

This limited warranty does not apply to paint, firepot, grill cover or damage caused from corrosion. Z Grills shall not be liable for transportation charges, labor costs or export duties.

Z GRILLS, Inc. takes every precaution to utilize materials that retard rust including the use of high-temperature paint where advisable. Even with these safeguards, the protective coating can be compromised by various substances and conditions beyond Z Grills' control. Humid environment, high temperature, chlorine, insecticide, salt and disinfectant are some of the substances that can affect paint and metal coatings. For these reasons, the limited warranties do not cover rust or oxidization, unless there is loss of structural integrity on the grill components.

Z GRILLS, Inc. shall not be liable if you install, operate, clean or maintain your grill without following the owners' manual instructions. Misuse, abuse, alteration and natural disasters are not included in this warranty.

INITIAL FIRING INSTRUCTIONS

Please read this manual carefully and follow it step by step before starting your Z Grills for the first time and each time the grill runs out of pellets.

After plugging in the grill, the controller display will first show the program code. Press the power button once to turn on the grill, then rotate the knob to adjust the temperature setting.Note:Quickly press the power button (a long press may fail to start the grill correctly).

1.Remove the Porcelain Grills, Warming Rack, Grease Drain Pan and Heat Baffle from the interior of the grill.

2.Open the Pellet Hopper Lid, make sure there are no foreign objects in the Auger and Hopper.

3.With the Switch in the position of Shut Down Cycle , plug the power cord into a 120 Volt AC grounded outlet.

4.Press button to turn on your Z Grill and turn the Temperature Dial to the SMOKE position.

Please check the following things:

(WARNING: Please do not touch it!)

- Confirm the Auger is turning. (Wait for 1-2 minutes.)
- Hold your fingers above the Firepot to confirm the fan is blowing air through the Firepot.
- The hotrod will heat up and you should be able to sense the heat coming from it. (It takes approximately 1-2 minutes.)
- **You should see a temperature number displayed on your LCD DISPLAY. If you see something different displayed it is an ERROR CODE. NOTE: PLEASE SEE TROUBLESHOOTING FOR DETAILS ON ERROR CODES.**

5.Turn the Temperature Dial to SHUT DOWN CYCLE.

(Please note the draft fan will stay on for 10 minutes in this mode.)

6.Fill the Pellet Hopper with Pellets. Then turn the Temperature Dial to HIGH. It takes some time for the Pellets to travel through the tube, when the Pellets start to drop, turn the Temperature Dial to SHUT DOWN CYCLE. Leave grill until it shuts off automatically.

7.Turn the Temperature Dial to SMOKE. Allow the Pellets to come to full flame. Once flames are coming out of the Firepot, turn the Temperature Dial to SHUT DOWN CYCLE and let the grill cool down.

[We suggest that you should wrap the Grease Drain Pan with heavy-duty aluminum foil before using because it is easy to clean.]

8.Place components back in place. Open the lid and turn the Temperature Dial to SMOKE. A few minutes later, when you see whitish-gray smoke coming out of the grill, close the lid and turn the Temperature Dial to any cooking setting desired.

9.Set Temperature Dial to HIGH and let grill run for 45 minutes at this setting to rid it of any foreign matter. This step must be done before cooking any food.

10.Please preheat the grill for 10 minutes before adding food. This makes your grill heat up faster and quickly reach your desired cooking temperature. Adding food sooner will slow down the heating process.

11.To turn off the grill, rotate the knob to the 'Shut Down Cycle' position. The fan will continue to run for approximately 10 minutes to extinguish any remaining fire in the firepot.NOTE: Do not unplug the power cord during or immediately after cooking, as this may pose a safety hazard.

ALWAYS START THE GRILL ON SMOKE SETTING WITH THE LID OPEN !

After the Pellets are ignited, you can turn the Temperature Dial to any cooking temperature desired. Please don't turn the Temperature Dial to SHUT DOWN CYCLE while in use.

★(Feed button): Feed pellets into the fire pot. Pressing and holding the Feed button will activate an extra feed of pellets to the fire pot. Release "FEED" to stop feeding pellets.