vive®

ALTERNATING PRESSURE MATTRESS

User Manual

LVA1004

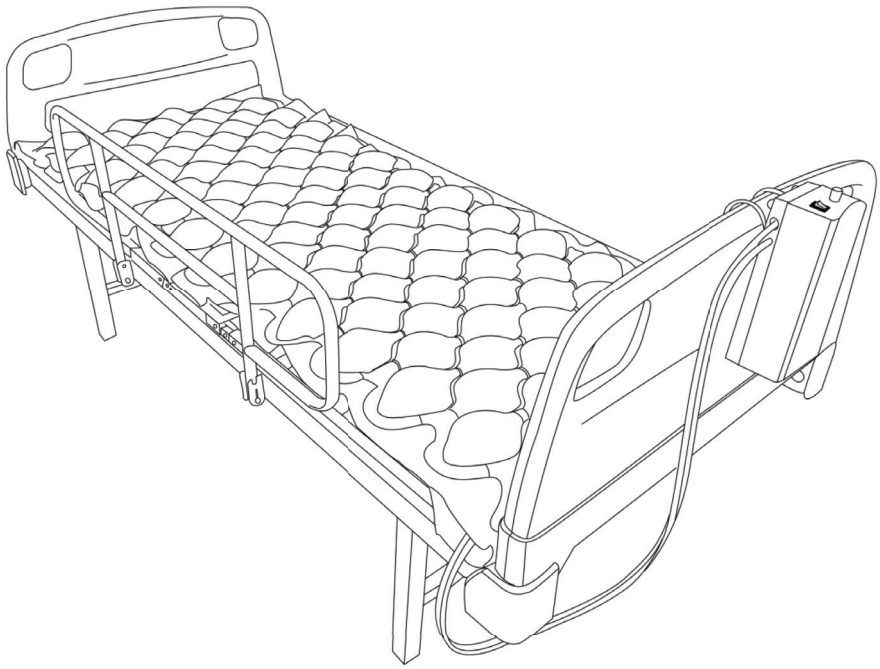

vivehealth.com

WHAT'S INCLUDED

- 1x Pressure Pad
- 1x Inflation Tubes
- 1x Alternating Pressure Pump

QUICK SETUP

▶ *Watch at* **bit.ly/pressuremattress**

1. Unroll the pressure Pad and lay it flat on your mattress. Make sure the inflation tubes are facing up and positioned at the head or foot of the bed, depending on where you plan to place the pressure pump.
2. Use Built in metal hooks to Hang the Pressure Pump over the bed frame at the foot of the bed(Recommended). You may also lay the pump flat on a table or floor.
3. Connect the inflation tubes to the pressure pump and pressure Pad
4. Plug the pressure pump into electrical outlet. Power supply is compatible with USA Standards (110v)
5. Turn the Pump on and adjust the pressure dial to "Firm" setting to speed up inflation process. Wait until the mattress has been fully inflated before using (takes approx. 10 minutes to fully inflate).
6. Set the variable pressure dial to ideal setting for the user depending on weight and comfort. We recommend starting at "Firm" and adjusting based on the user.

HOW IT WORKS

▶ *Watch at* **bit.ly/pressuremattress**

The Vive Alternating Pressure Mattress has 130 bubble air cells. The air cells are divided into two different sections. Each section is connected separately to the pressure pump. The pressure pump automatically alternates between sections at 6 minutes intervals.

The pressure dial on the front of the pressure pump allows you to adjust the pad pressure from firm to soft. Regardless of the pressure setting the pump will always alternate in 6 minute intervals.

CLEANING INSTRUCTIONS

Variable Pressure Pump

- Disconnect from the electrical supply before attempting to clean.

- Use cloth with a mild detergent solution.

Pressure Mattress/Pressure Hose

- Use cloth with a mild detergent solution or a surface detergent/ disinfectant for cleaning the mattress and hose.

SPECIFICATIONS

Mattress

- Weight Capacity: 300 lbs.
- Dimensions: 36" x 78" x 3" (inflated)
- Materials: PVC (EN-71) 0.3mm

Pump

- Interval Duration: 6 Mins.
- Air Output: 6-7 L/Min.
- Pressure Range: 35~130 mmHg
- Electrical Power Supply: 110-120 Volts
- Protection Against Class II Electric Shocks

WARNING ⚠

- Product should not be left unattended when plugged in.
- Do not continue to operate if the cord is damaged or has been exposed to water.
- Do not expose the equipment to excessive humidity.
- Do not use corrosive cleaning products such as industrial degreasers or acetic solvents.
- Do not attempt to relocate this equipment while connected to the electrical supply.
- Keep away from sharp objects as they may puncture the pressure pad.

GUARANTEE

You are protected by Vive Health's industry leading guarantees and customer service:

60 Days - Pressure Pad

1 Year - Alternating Pressure Pump

If you did not purchase through vivehealth.com, please register at vivehealth.com/register to validate your guarantee.

Product Code: LVA1004

vivehealth.com

If you have any questions please contact us.



service@vivehealth.com



1-800-487-3808
Monday - Friday 9am - 5pm EST