

2024 WAHOO TRAIL

SERVICE MANUAL

Contents

About this manual

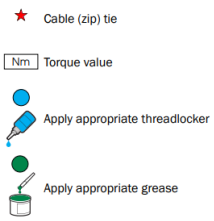

Brake/shift routing

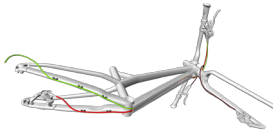

Dropper seatpost routing

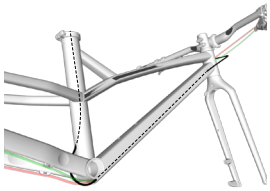

Rear derailleur hanger and axle



Front axle

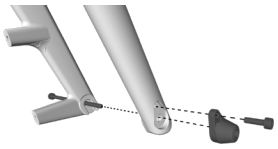

Headset



Front fender



Specifications

		20"	24"
Rear hub OLD		135mm	135mm
Front hub OLD		100mm	100mm
Seatpost OD		31.6mm	31.6mm
Upper fork steerer tube OD		28.6mm	28.6mm
Lower fork steerer tube OD		28.6mm	28.6mm
Brake rotor diameter min/max	Front	160mm	160mm
	Rear	160mm	160mm
Tire width max	Without fenders	2.40"	2.40"
	With fenders	2.40"	2.40"
Tire width min		2.0"	3.0"
Fender compatible	Front	Yes	Yes
	Rear	Yes	Yes
Kickstand compatible		Yes	Yes

Chainline/chainring

Chainline	Max chainring teeth (T)		
	Small	Large	Single (1x)
49mm	—	—	30T

Copyright 2023 Trek Bicycle Corporation All Rights Reserved

About this manual

Scope

This manual contains parts diagrams, specifications (such as grease and torque values), instructions, part numbers, and helpful tips. It does not contain instructions for all components (such as brake calipers). Refer to the original manufacturer for more information.

Replacement parts

Trek recommends using only Trek OEM (original manufacturer) replacement parts.

Additional info

The Owner's Manual is available at *Trekbikes.com/manuals*.

Legend

★ Cable (zip) tie

Nm Torque value

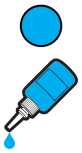

Apply appropriate threadlocker



Apply appropriate grease

Safety

WARNING

Properly tighten hardware

Always tighten hardware to the specified torque. Over-tightening hardware could deform or break the hardware or components. Under-tightening hardware could cause hardware or components to become loose. Either situation could damage the bicycle and result in injury to the rider.

WARNING

Reapply threadlocker

All reused-fasteners with pre-applied threadlocker must be cleaned with isopropyl alcohol and have new thread-locker applied before re-assembly. If threadlocker is not applied, the fasteners may loosen which could damage the bicycle and result in injury to the rider.

Brake/shift routing

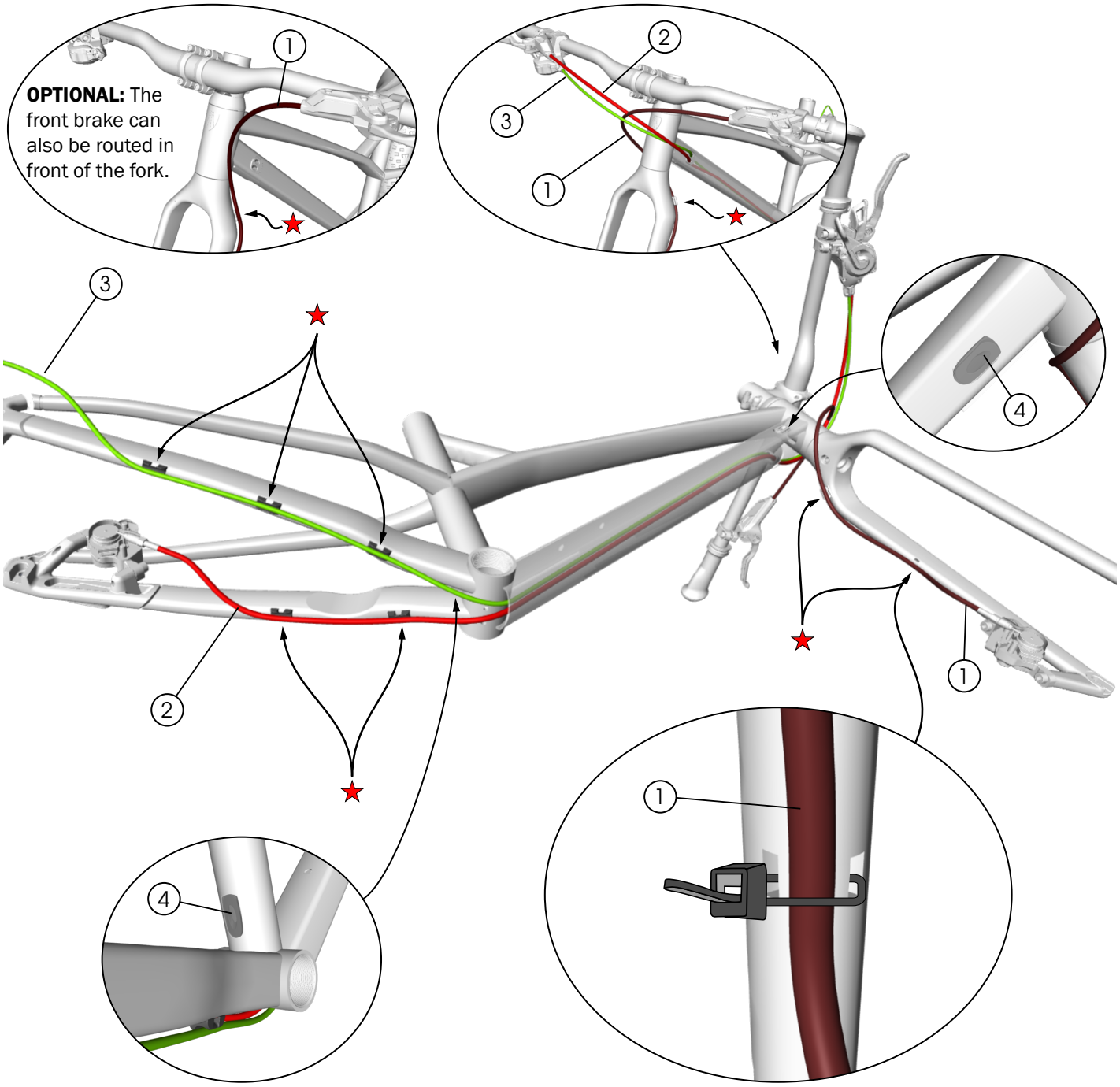

1. Front brake hose
2. Rear brake hose
3. Rear derailleur housing
4. Hole cover (optional) — *W556418*

Dropper seatpost routing

NOTE: The dropper seatpost is sold aftermarket.

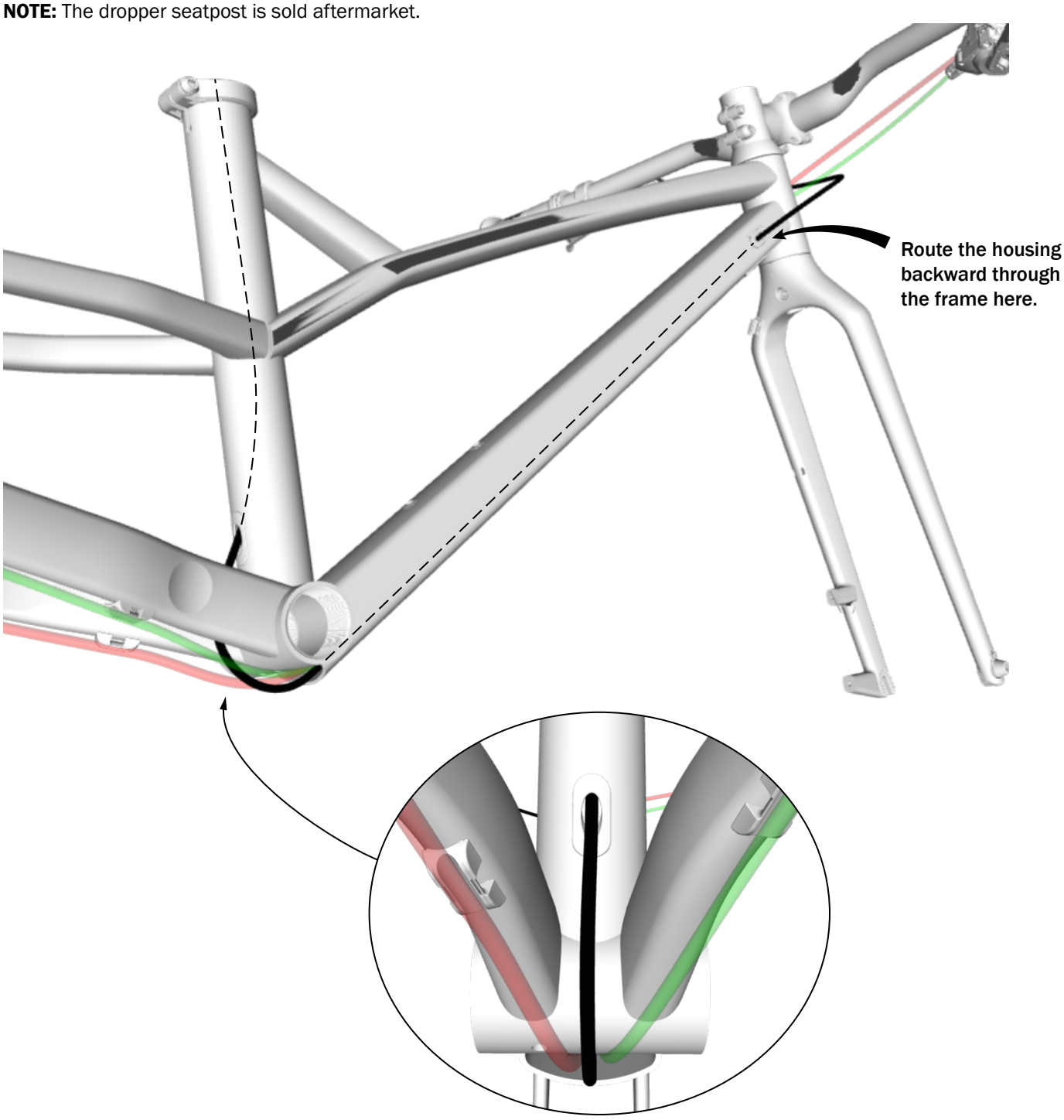

NOTICE: When installing a dropper seatpost, make sure there is adequate clearance for seatpost insertion.

Rear derailleur hanger and axle

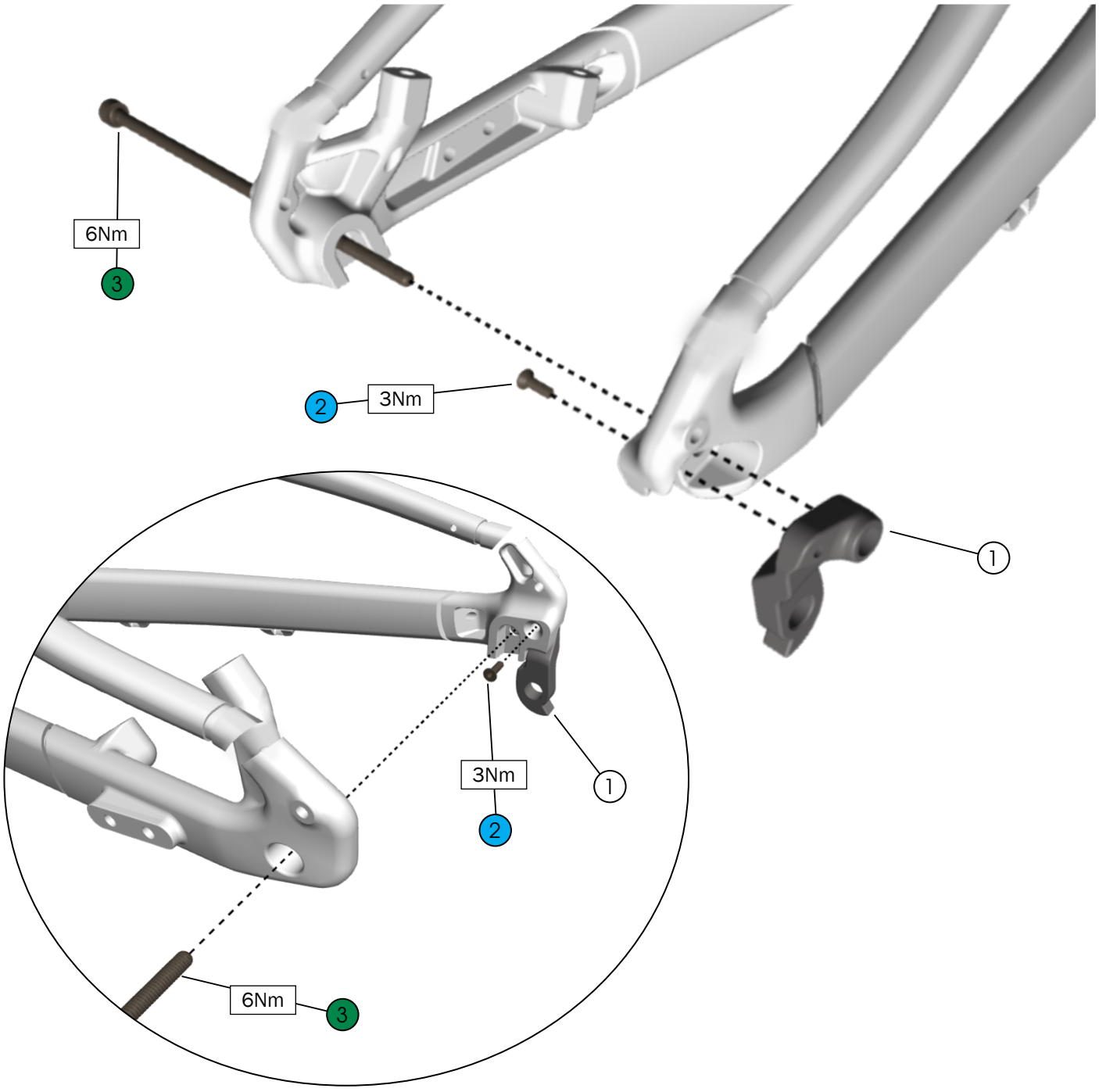

1. Rear derailleur hanger — *W5260077*
2. Fastener (M4x14mm) — *W5270010*
3. Thru-axle — (M5x135mm) — *W5267150*

Front axle

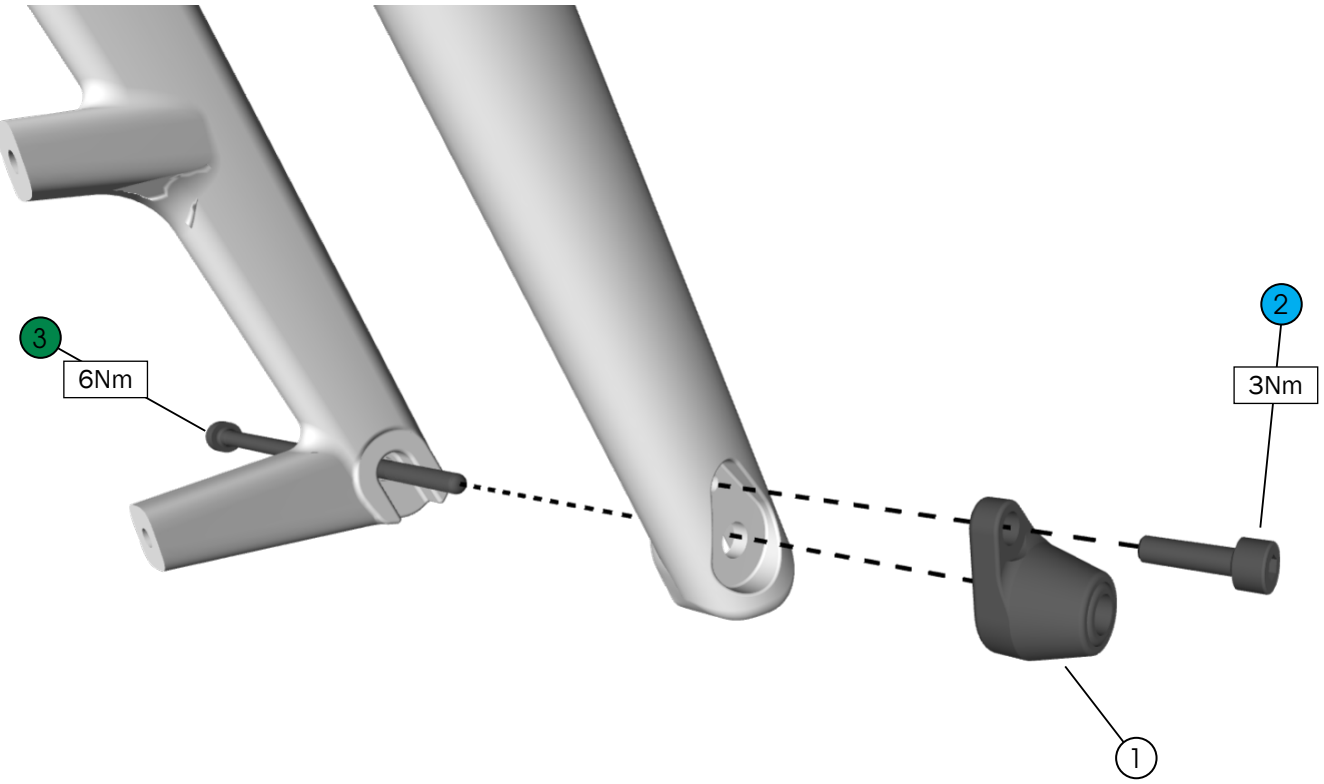

1. Retention nut — *5273062*
2. Fastener (M4x12mm) — *5305635*
3. Thru-axle (M5x100mm) — *W5267149*

Headset

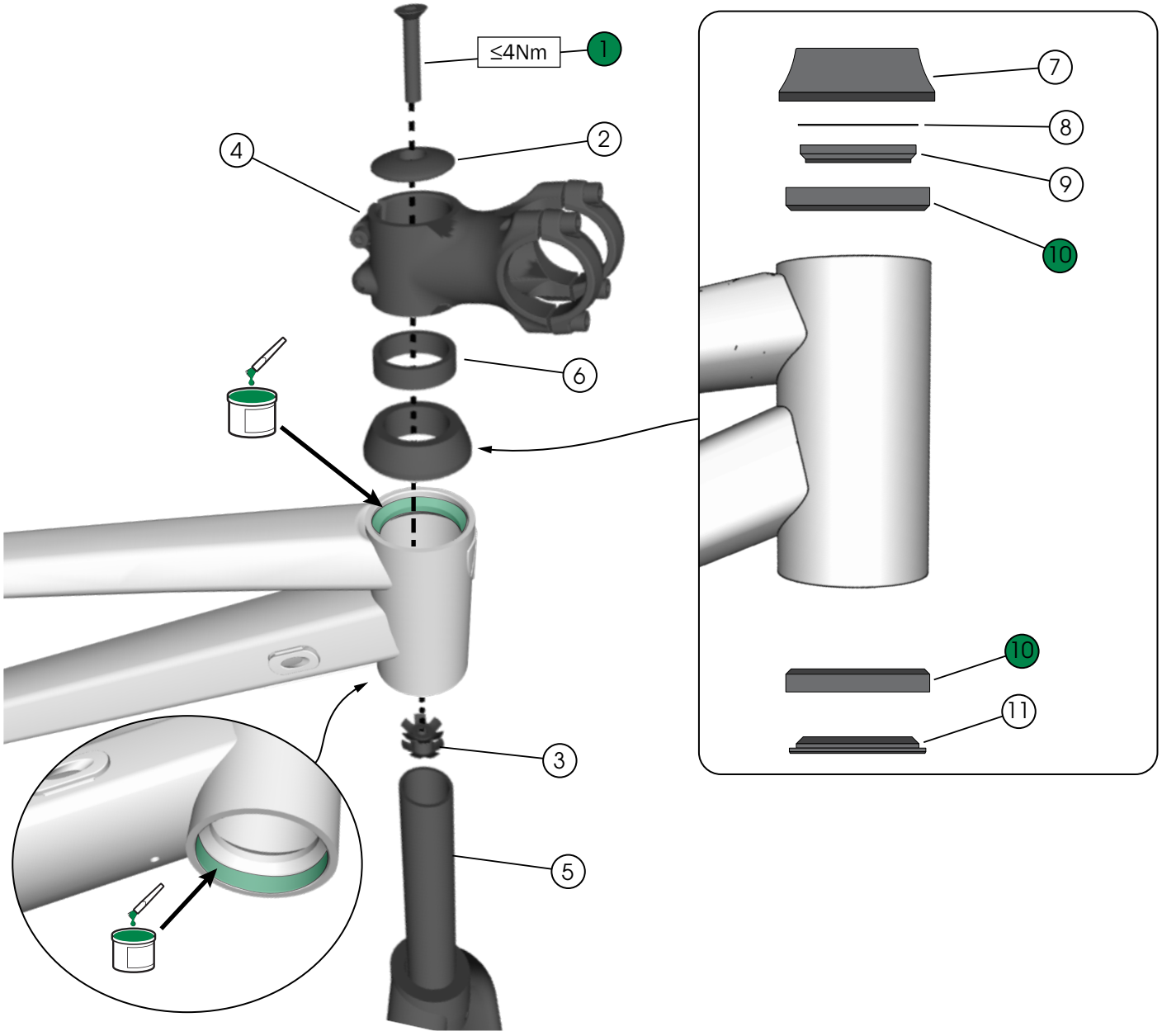

1. Top cap fastener
2. Top cap

W545877

3. Compression nut (1-1/8”)
4. Stem (50mm) — *W562039*
5. Fork (Carbon Smoke)
   - 20” — *5315919*
   - 24” — *5315920*
6. Spacer, 10mm — *5253929*
7. Dust cover
8. Gasket
9. Cling ring
10. Bearings
11. Reducer

W5310900

Front fender

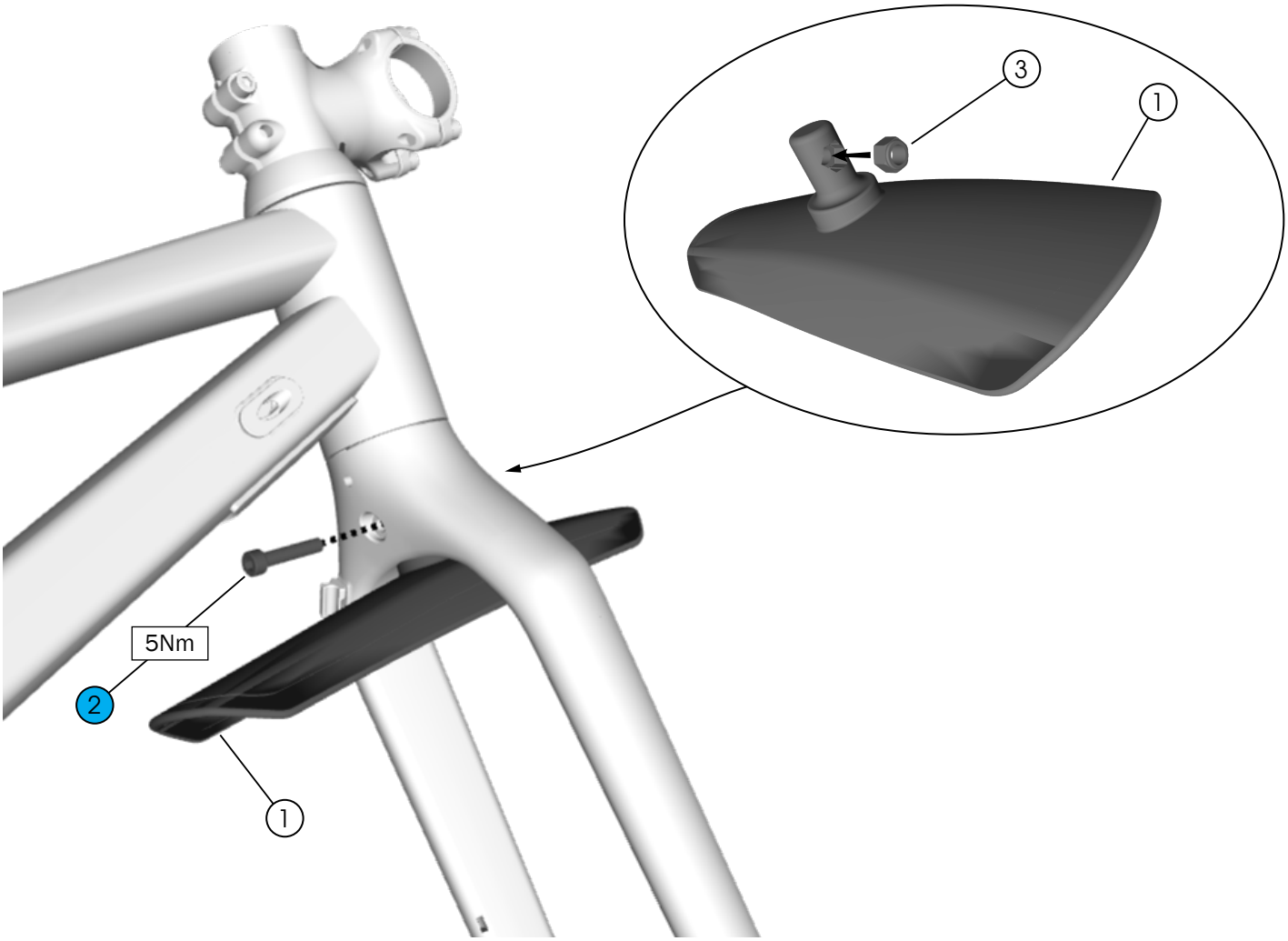

1 Front fender

2 Fastener (M5x25mm) — *W5252787*

3 Nylock nut (M5)

W5306985

Specifications

Frame

		20”	24”
Rear hub OLD		135mm	135mm
Front hub OLD		100mm	100mm
Seatpost OD		31.6mm	31.6mm
Upper fork steerer tube OD		28.6mm	28.6mm
Lower fork steerer tube OD		28.6mm	28.6mm
Brake rotor diameter min/max	**Front**	160mm	160mm
	Rear	160mm	160mm
Tire width max	**Without fenders**	2.40”	2.40”
	With fenders	2.40”	2.40”
Tire width min		2.0”	2.0”
Fender compatible	**Front**	Yes	Yes
	Rear	Yes	Yes
Kickstand compatible		Yes	Yes

Chainline/chainring

Chainline	Max chainring teeth (T)		
	Small	Large	Single (1x)
49mm	—	—	30T