

VERVE+ 1, 2

SERVICE MANUAL

Contents

Routing

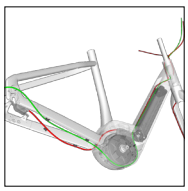
Brake/shift routing


Light routing

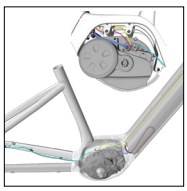
E-system routing

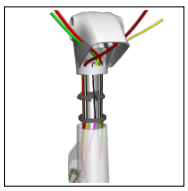
Headset routing

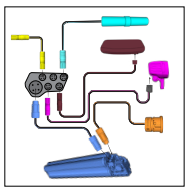
Wiring diagram

E-system


Charge socket

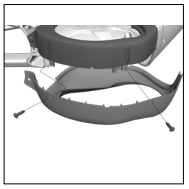
Drive unit cover

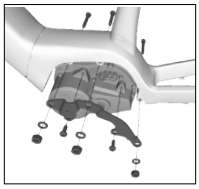
Drive unit

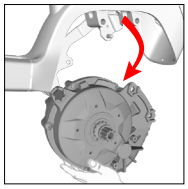
Lower or remove the drive unit

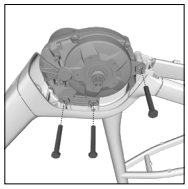
Install the drive unit

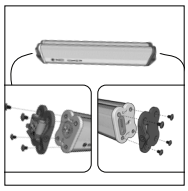
Battery

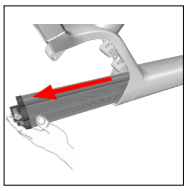
Remove the battery

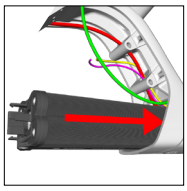
Install the battery

Headset

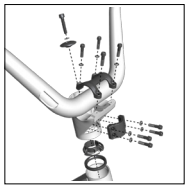
Stem


Stem cover

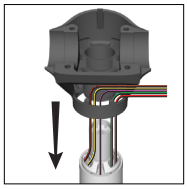
Install the stem


Headset — standard stem

Frame

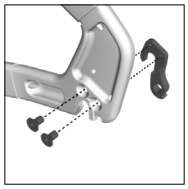
Rear derailleur hanger

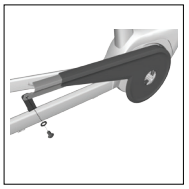
Chainguard

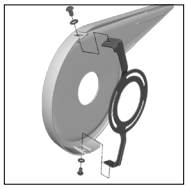
Install the chainguard


Rear rack

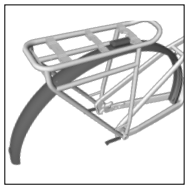
Rear fender

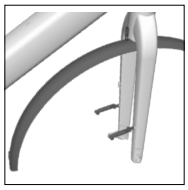
Front fender

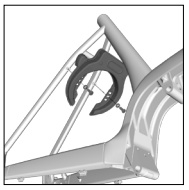
Ring lock

Copyright 2024 Trek Bicycle Corporation All Rights Reserved

About this manual

Scope

This manual contains parts diagrams, specifications (such as grease and torque values), instructions, part numbers, and helpful tips. It does not contain instructions for all components (such as brake calipers). Refer to the original manufacturer for more information.

Replacement parts

Trek recommends using only Trek OEM (original manufacturer) replacement parts.

Additional info

Additional manuals are available at Trekbikes.com/manuals.

- Owner's Manual
- Quick Start Guide - Bosch Smart System
- Manual - 2023 Bosch Smart System

Inspect the bike

Please inspect the bicycle carefully after removal from the box and all packaging:

- Inspect all surfaces of the bicycle for damage, pay special attention to the fork legs and the seat stays (both inside and outside surfaces).
- If packaging damage is located near the front of the bicycle, remove the fork from the frame and inspect the steerer tube for damage.

Legend

★ Cable (zip) tie

Nm Torque value

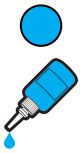
Apply appropriate threadlocker


Apply Bontrager grease

Safety

WARNING

Properly tighten hardware

Always tighten hardware to the specified torque. Over-tightening hardware could deform or break the hardware or components. Under-tightening hardware could cause hardware or components to become loose. Either situation could damage the bicycle and result in injury to the rider.

WARNING

Reapply threadlocker

All reused-fasteners with pre-applied threadlocker must be cleaned with isopropyl alcohol and have new threadlocker applied before re-assembly. If threadlocker is not applied, the fasteners may loosen which could damage the bicycle and result in injury to the rider.

Brake/shift routing

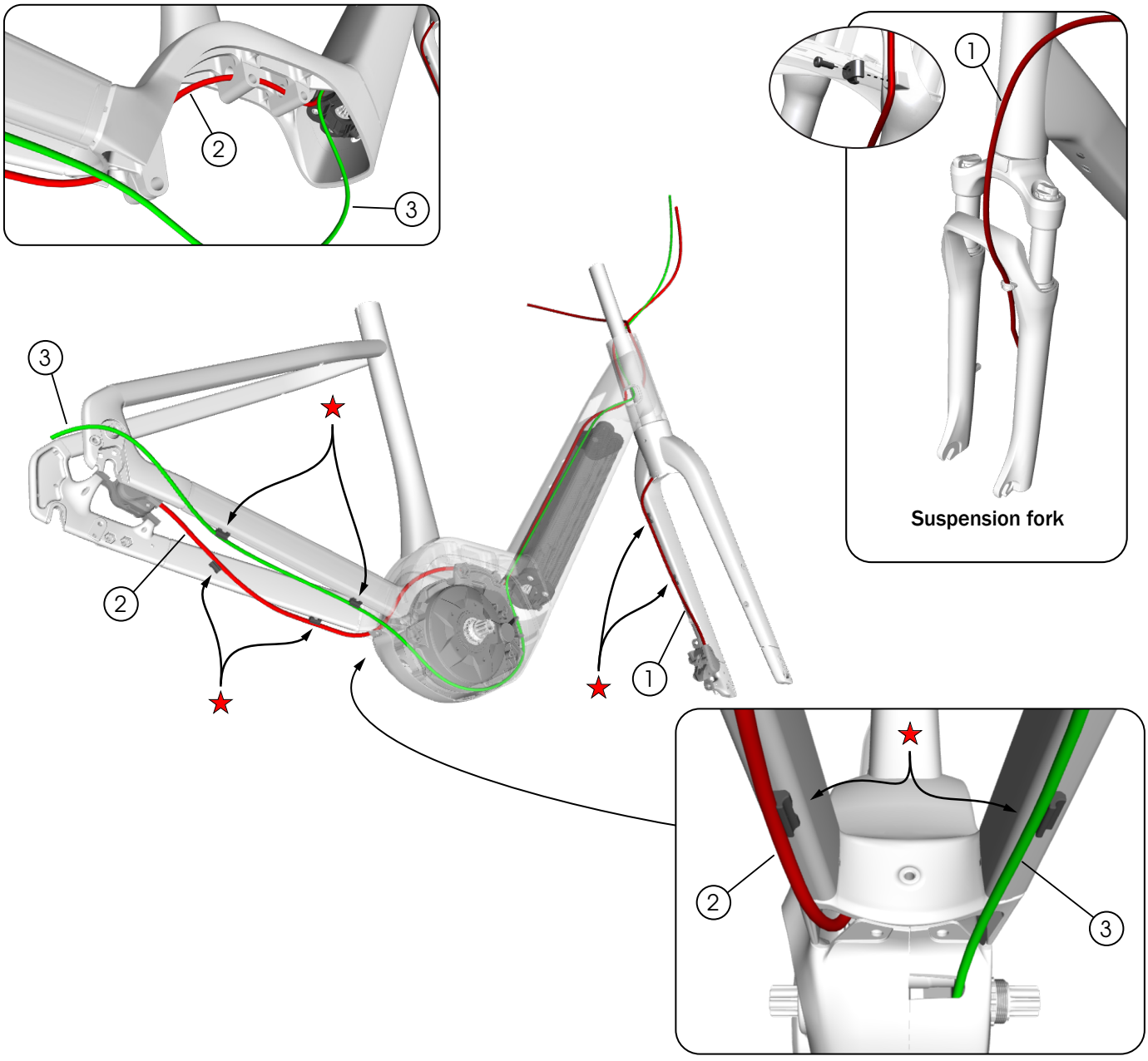

1. Front brake hose
2. Rear brake hose
3. Rear derailleur cable

Light routing

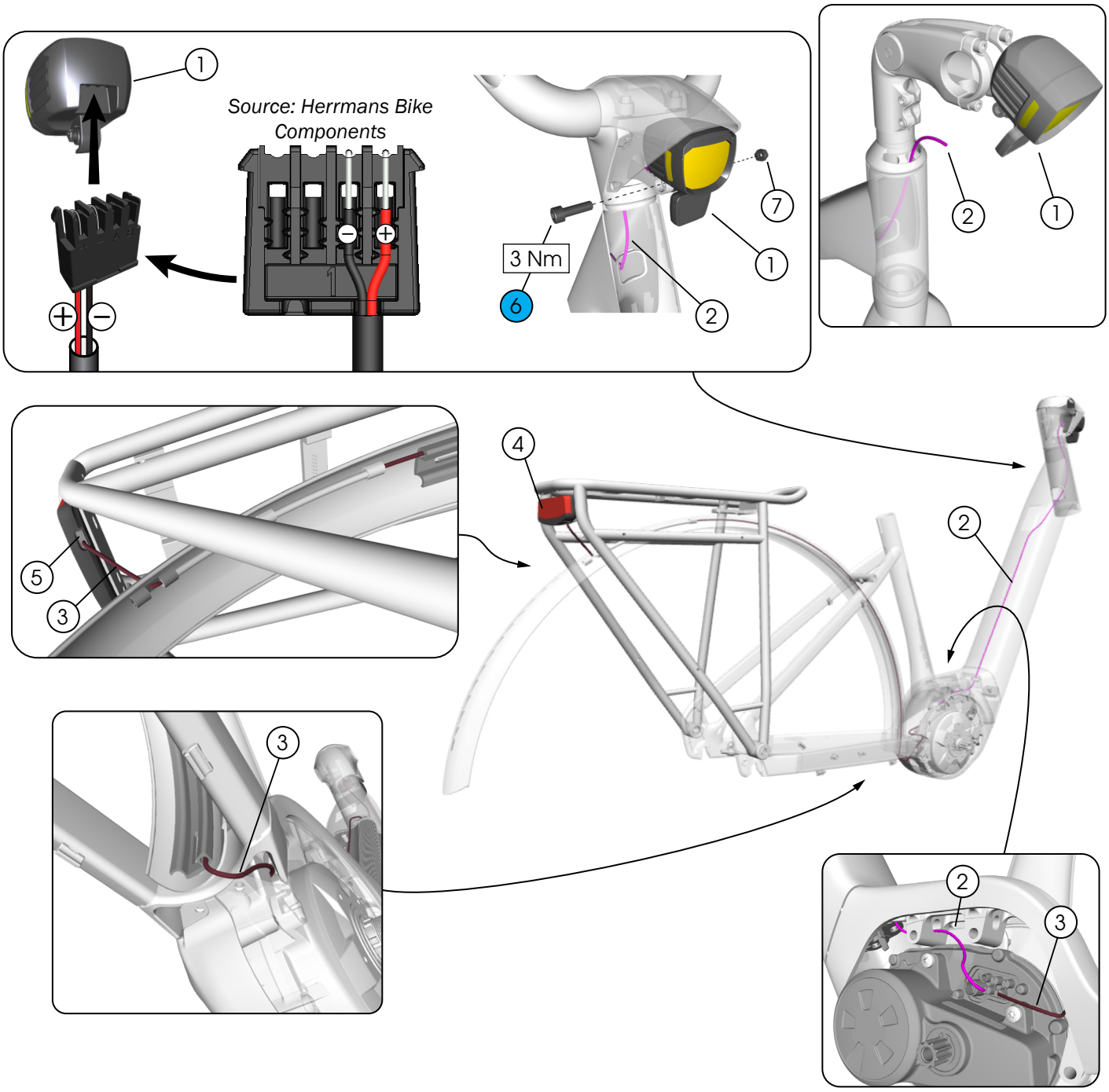

1. Front light — *598624*
2. Front light wire
3. Rear light wire
4. Rear light — *W504513*
5. Cable connector — *5307542*
6. Fastener (M6 x 22 mm)
7. Nut (M6)

E-system routing

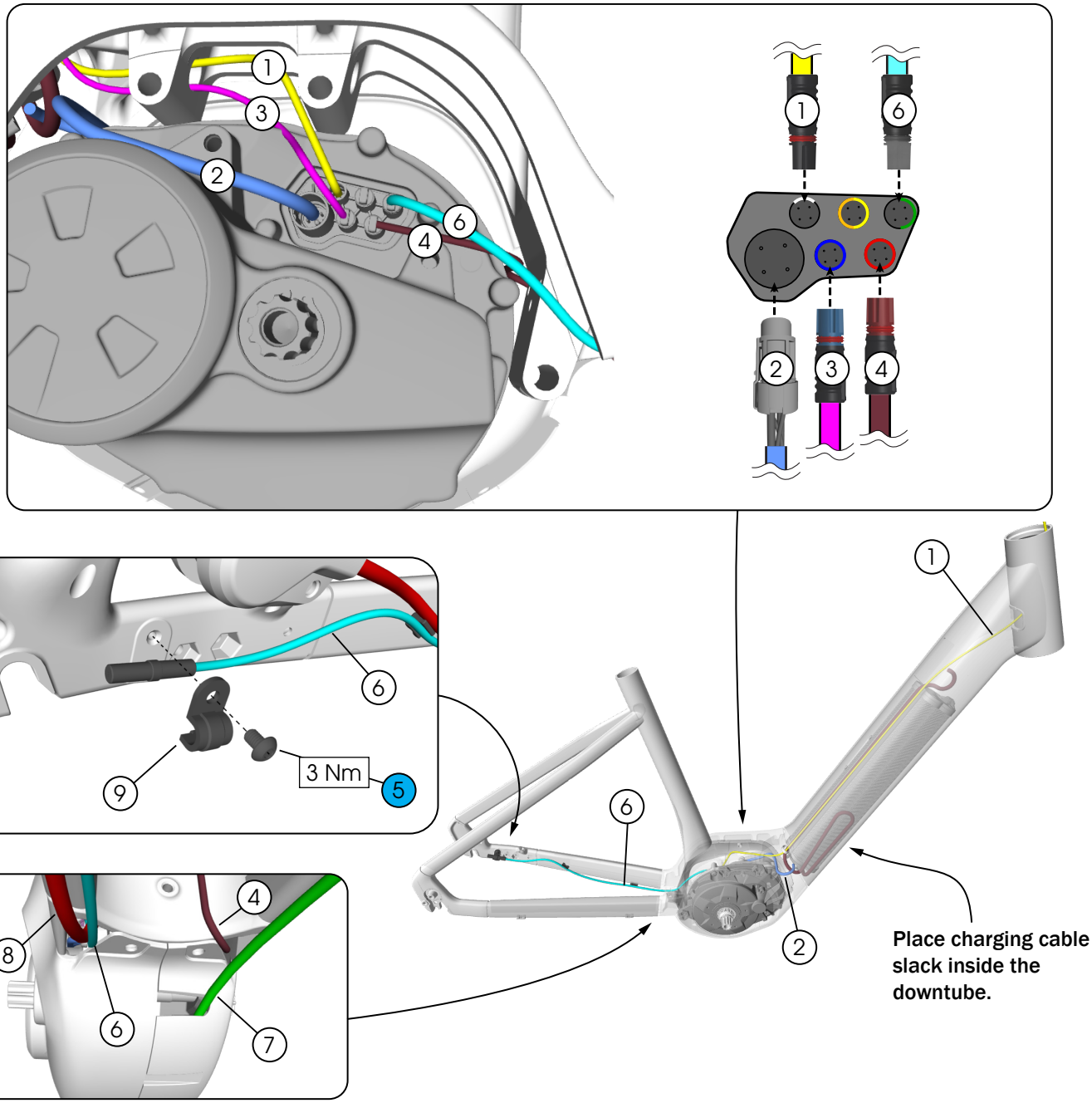

1. Remote cable
2. Battery cable — *5332741*
3. Front light cable
4. Rear light cable
5. Fastener (M4 x 6 mm) — *W575056*
6. Speed sensor cable, slim — **EB11.200.011*
7. Rear shift cable
8. Rear brake hose
9. Speed sensor clip — **1270.016.038*

**Bosch part number*

Headset routing

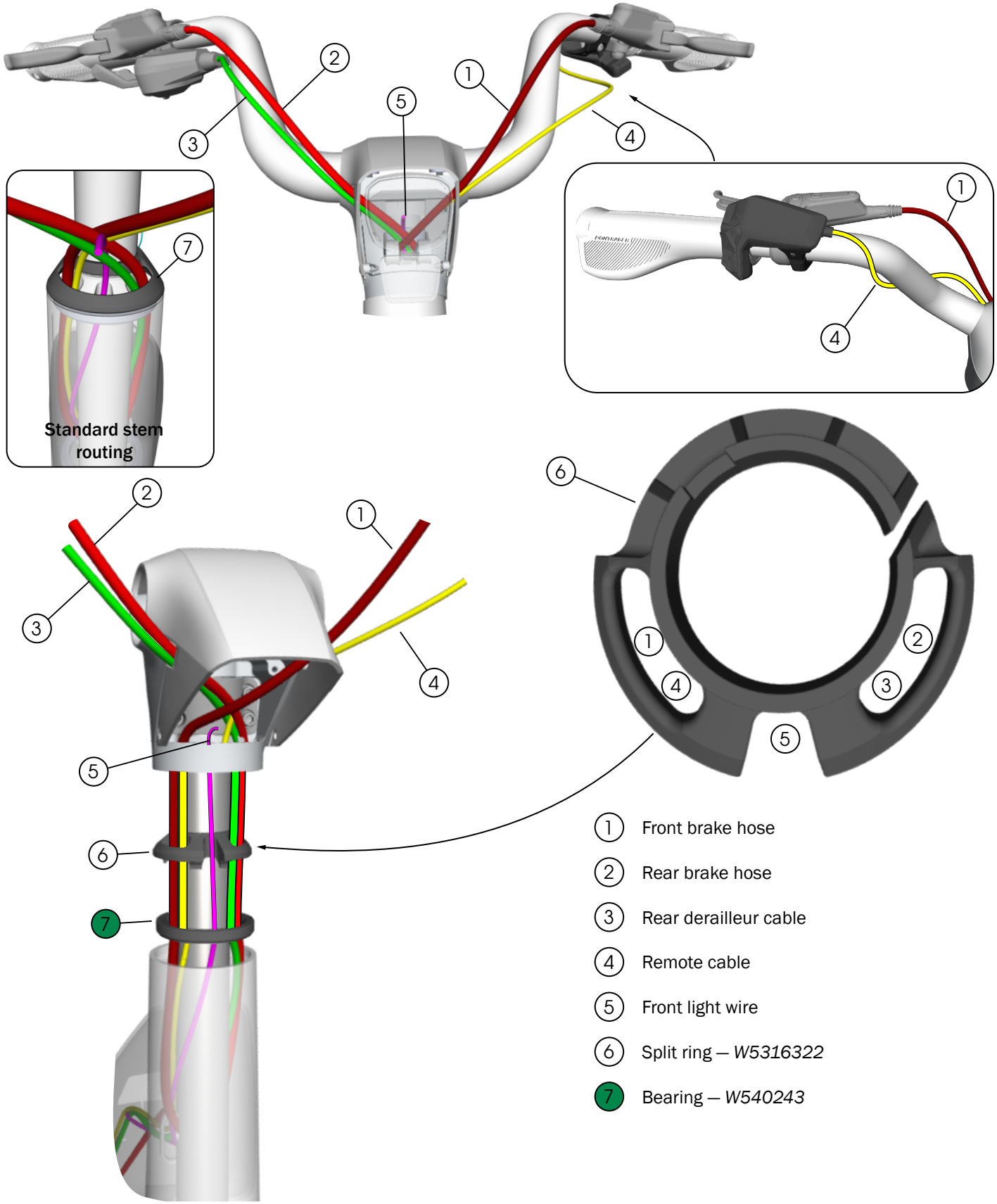

1. Front brake hose
2. Rear brake hose
3. Rear derailleur cable
4. Remote cable
5. Front light wire
6. Split ring — *W5316322*
7. Bearing — *W540243*

Wiring diagram

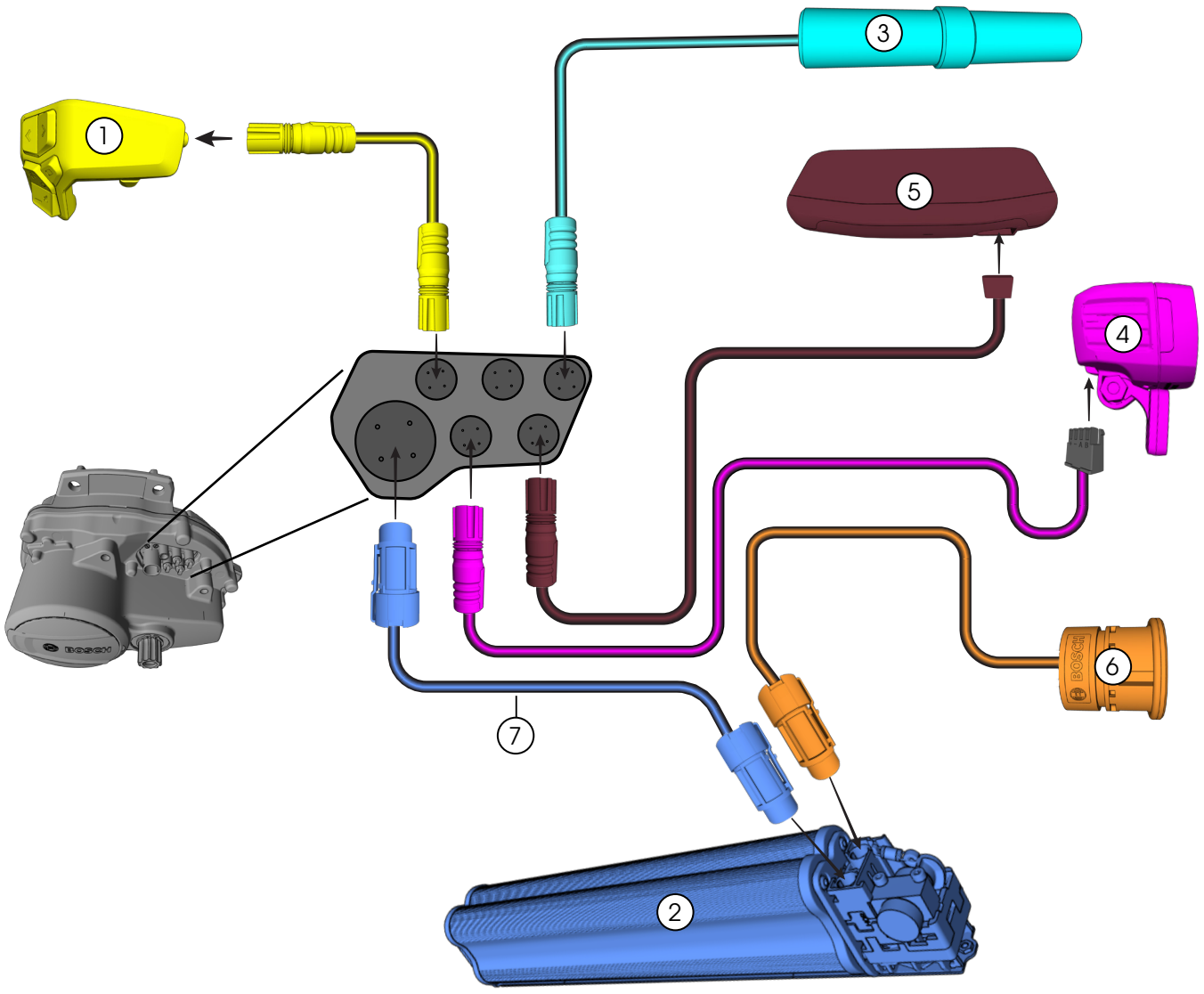

1. Remote
2. Battery, Bosch Compact PowerTube 400 — ** EB12.100.046 (US) / * EB12.100.020 (EU)*
3. Speed sensor cable, slim — **EB11.200.011*
4. Front light — *598624*
5. Rear light — *W504513*
6. Charge socket — **EB12.120.02C*
7. Battery cable — *5332741*

**Bosch part number*

Charge socket

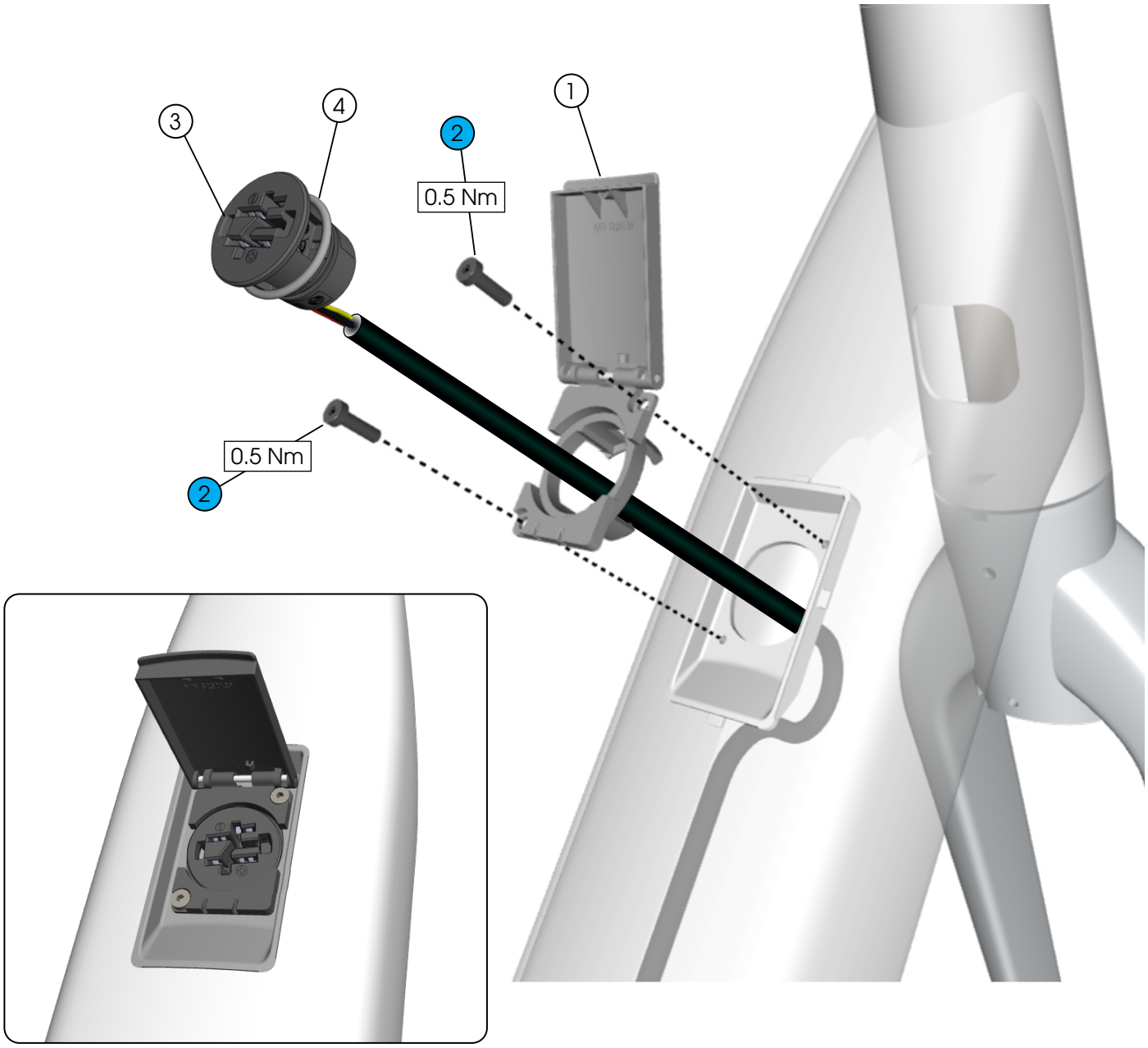

1. Charge socket cover — *W5251862*
2. Fasteners (M3 x 10 mm) — *5284849*
3. Charge socket — **EB12.120.02C*
4. O-ring — **EB12.120.019*

**Bosch part number*

Drive unit cover

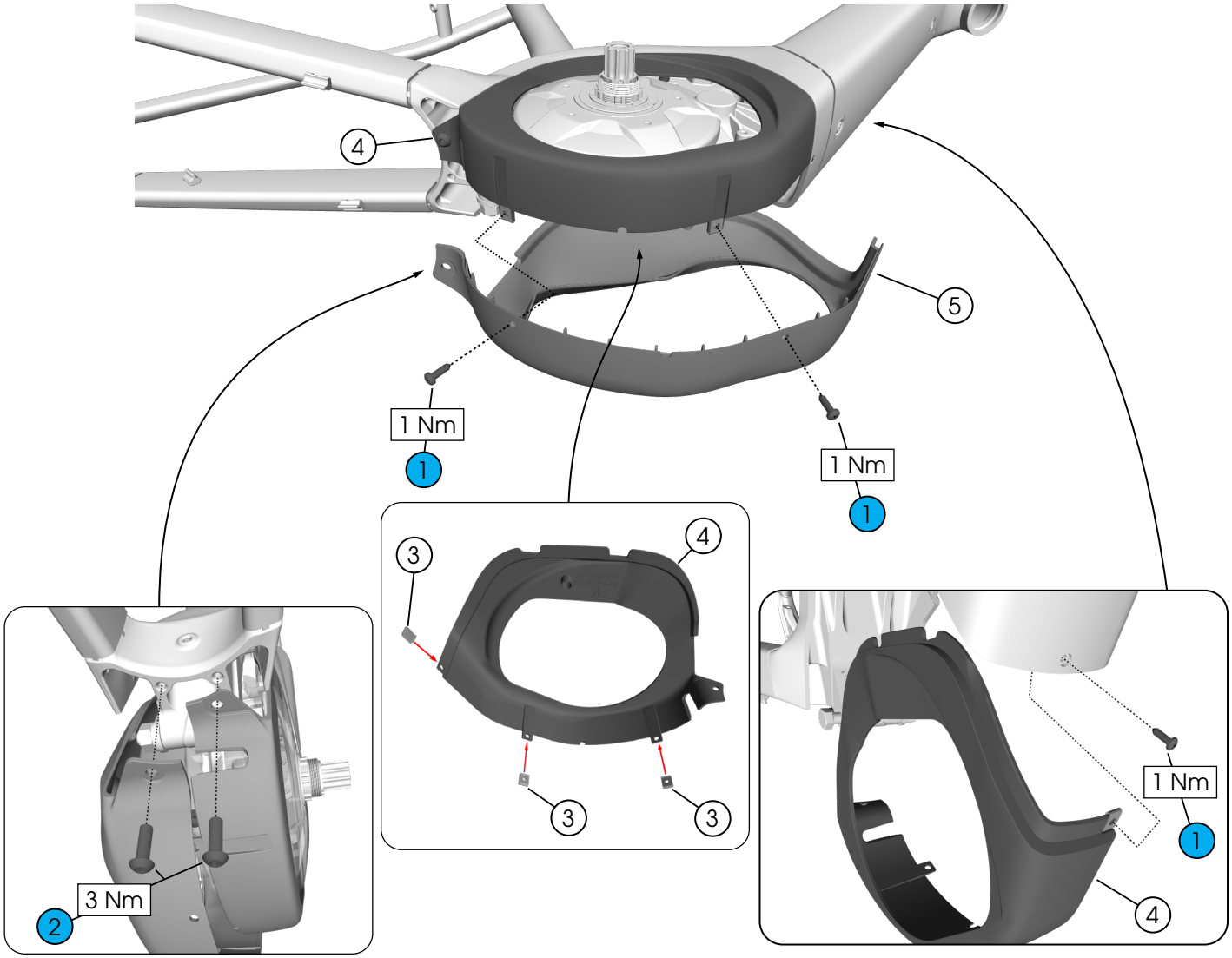

1. Fasteners, T10 (M2.9 x 13 mm) — *W5296506*
2. Fasteners (M5 x 16 mm)
3. Clips — *W562939*
4. Driveside drive unit cover — *W5310769*
5. Non-driveside drive unit cover — *W5310770*

Drive unit

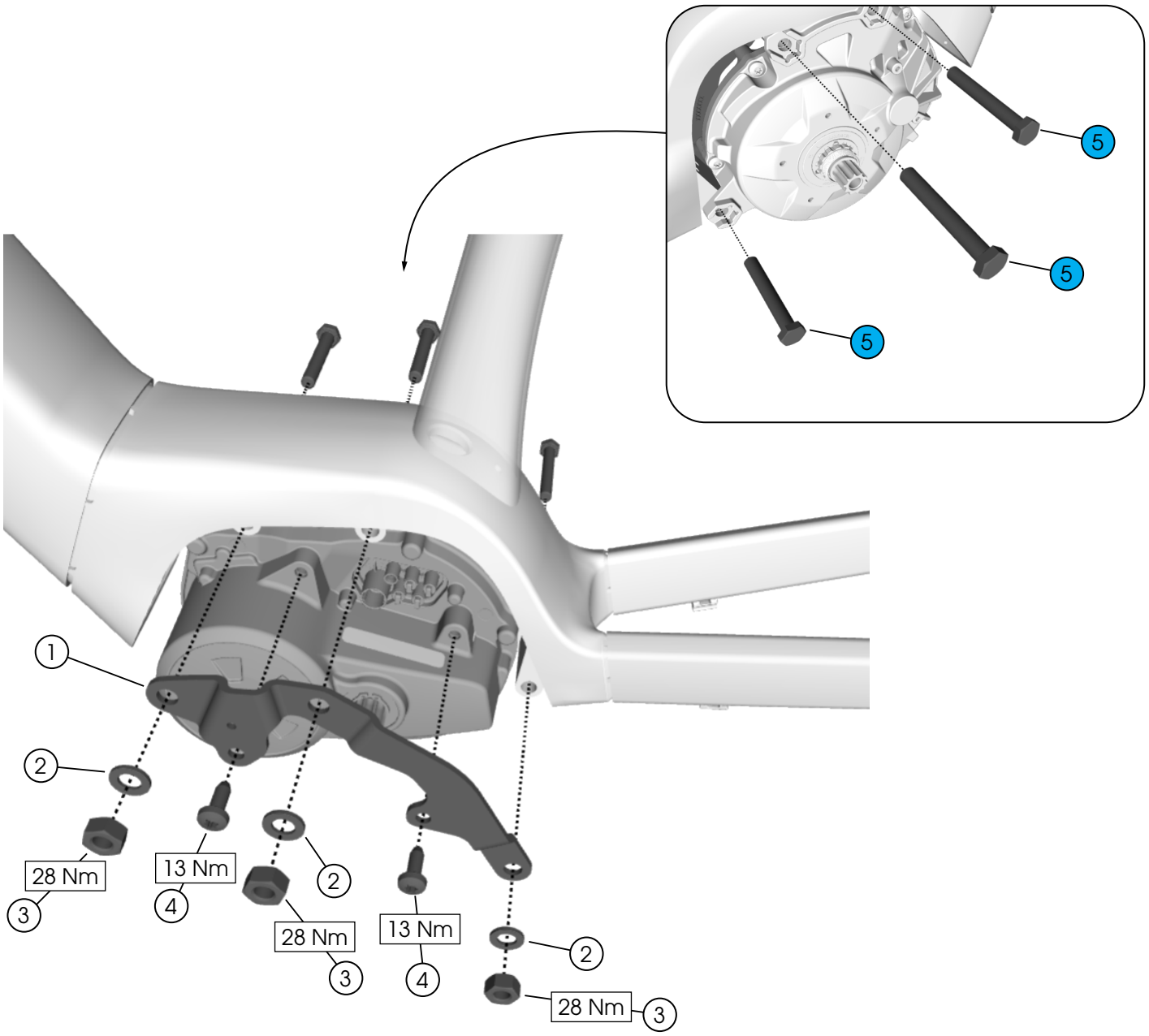

1. Mounting plate — **EB11.200.03R*
2. Washers (M8) — *5268467*
3. Nuts (M8) — **5268469*
4. Mounting plate fasteners, TP30
5. Drive unit fasteners (M8 x 60 mm) — *5268468*

**Bosch part*

Lower or remove the drive unit

For access to routing and battery connections, you can lower the drive unit instead of completely removing it.

NOTICE: Unplug all cables before removing the drive unit.

1. Remove the drive unit cover (see Drive unit cover).
2. Remove the front two nuts/washers and loosen the rear nut. Remove the middle fastener.

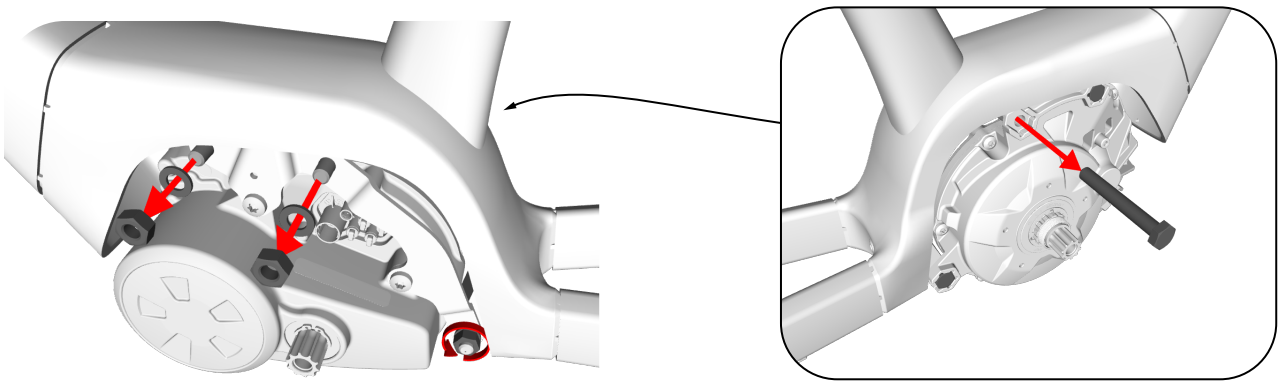

3. Support the motor with one hand and use your other hand to remove the front fastener. Slowly lower the drive unit.

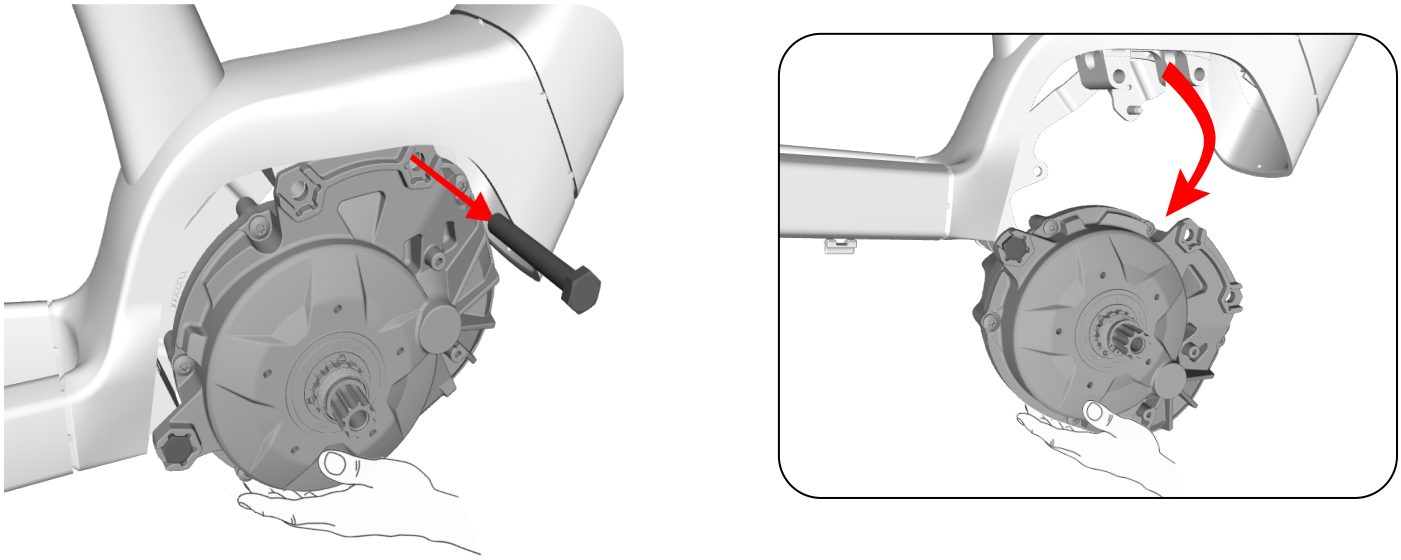

4. If you are fully removing the drive unit, unplug all cables connected to the drive unit and remove the remaining nut, washer, and fastener.

Install the drive unit

BEFORE YOU BEGIN: Make sure the battery is installed (see Install the battery) and all cables are routed.

1. Place the drive unit in the frame and insert the three fasteners.

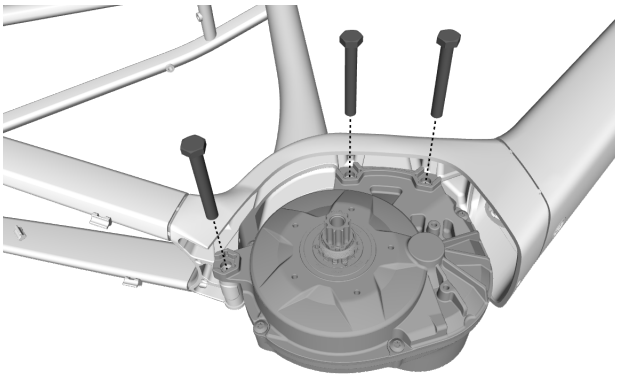

2. Loosely attach the mounting plate and hardware shown below. Make sure all cables are inside the mounting plate.

   IMPORTANT! If you are replacing the drive unit, you must replace the mounting plate.

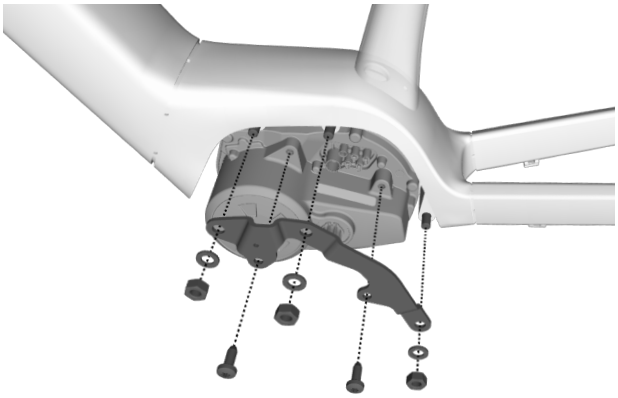

3. Fully torque each mounting plate fastener in the order shown below.

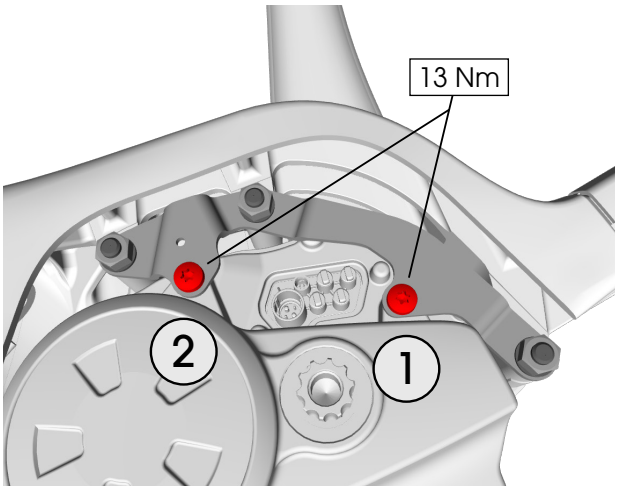

4. Fully torque each nut in the order shown below.

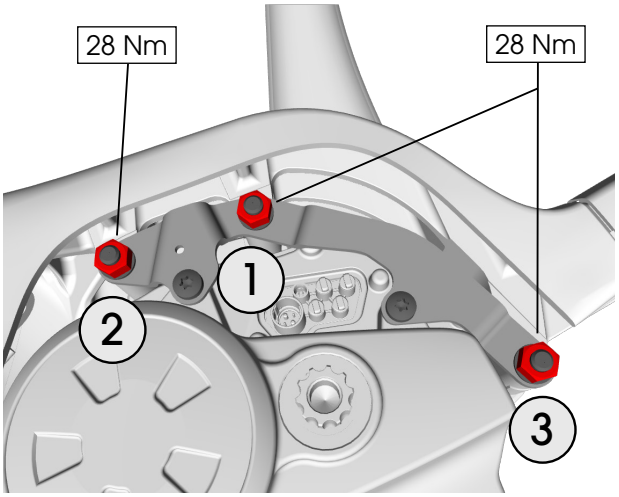

5. Connect all of the cables to the drive unit. Make sure they are all inside of the mounting plate.

Battery

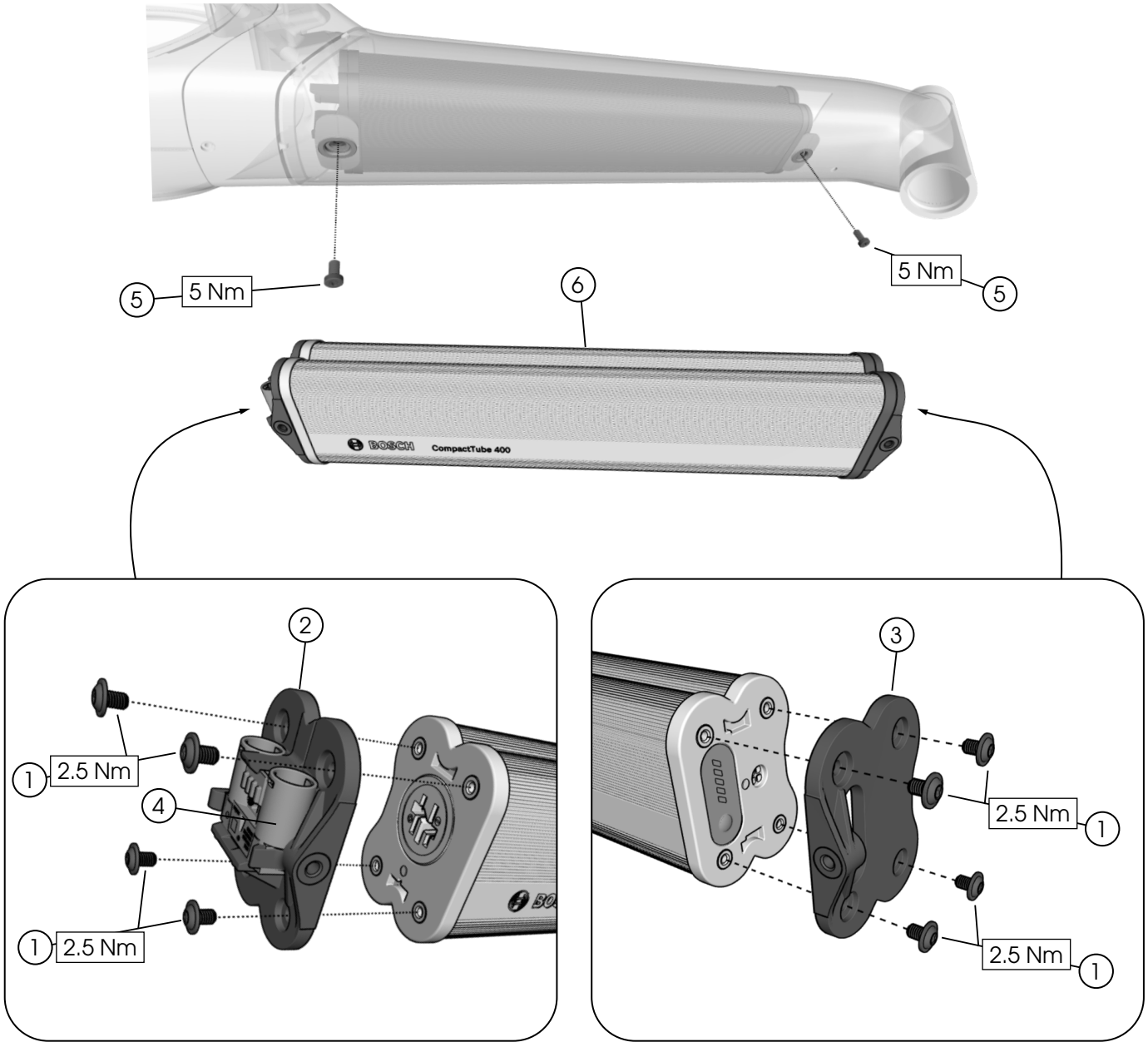

1. Fasteners (M4 x 6 mm) — **EB12.100.03U*
2. Fixed mount, lower — **EB12.100.058*
3. Fixed mount, upper — **EB12.100.059*
4. Battery outlet — **EB12.100.015*
5. Fasteners (M5 x 10 mm)
6. Battery, Bosch Compact PowerTube 400 — ** EB12.100.046 (US) / * EB12.100.020 (EU)*

*Bosch parts

Remove the battery

BEFORE YOU BEGIN: Remove the following:

- Cranks
- Chainguard
- Chainring
- Drive unit cover
- Drive unit

1. Rotate the bike in the repair stand so the downtube is parallel with the ground.
2. Remove the two battery fasteners.

   NOTE: The battery is now loose in the frame.

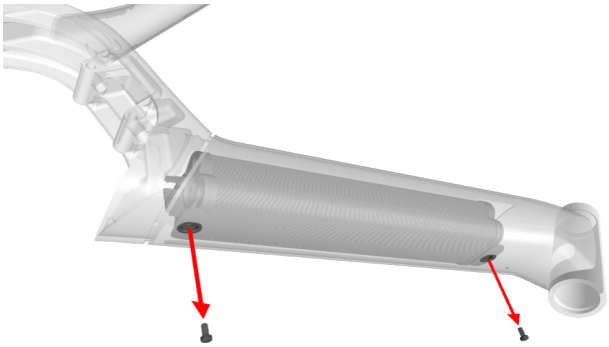

3. Pull the battery out halfway and remove the charge plug.

   NOTICE: Disconnect the cable by holding the plug. Do not use the cable to pull the plug apart — this can damage the cable/plug.

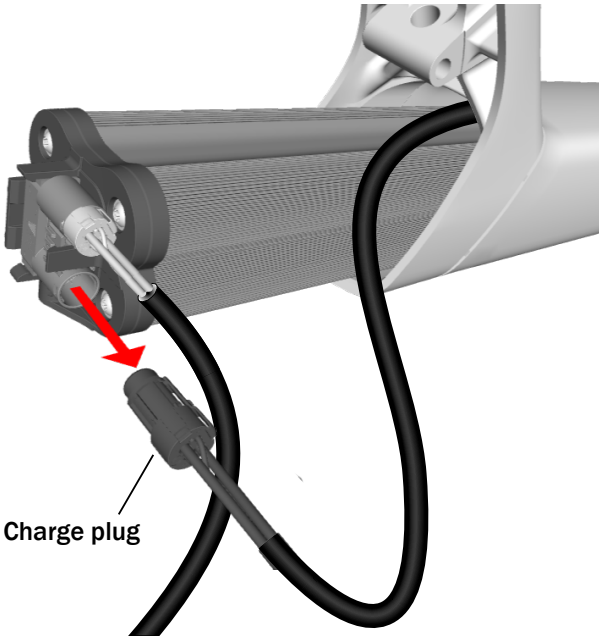

4. Carefully remove the battery.

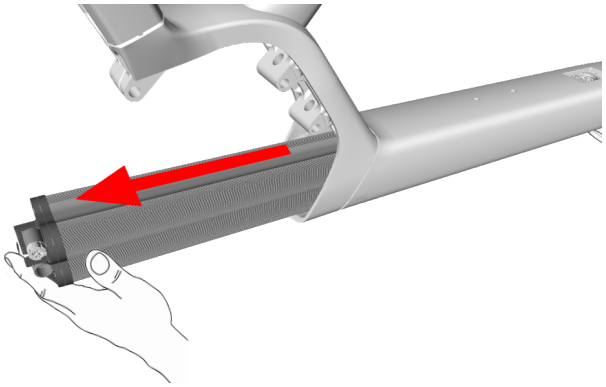

Install the battery

BEFORE YOU BEGIN: Make sure all cables are routed through the downtube and the charge socket is installed.

1. Rotate the bike in the repair stand so the downtube is parallel to the ground.
2. Zip tie the five cables together.

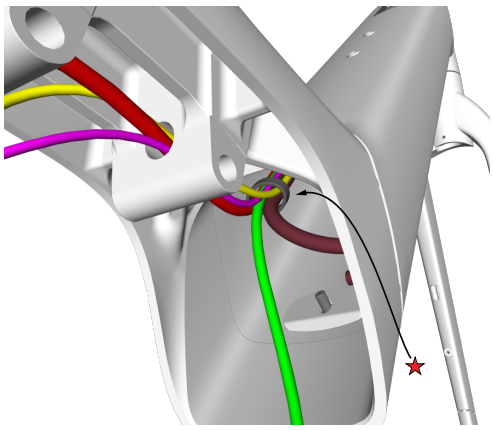

3. Insert the battery halfway into the downtube with the fastener threads facing down. Make sure the cables are routed above the battery.

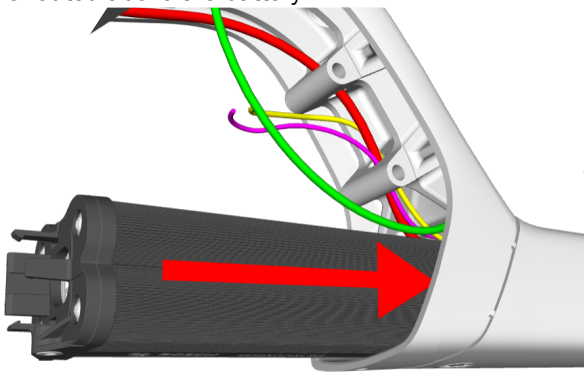

4. Connect the battery cable and charge socket cable to the battery outlet.

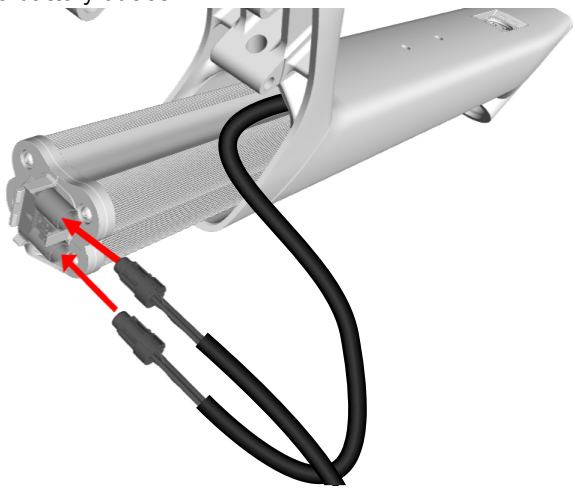

5. Fully insert the battery.

   NOTE: The front mount secures the battery in the correct position and aligns it with the fastener holes.

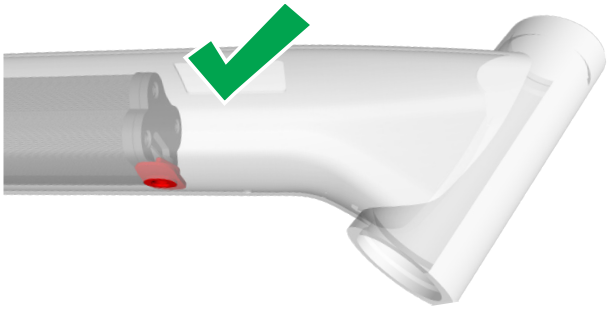

6. Install both battery fasteners.

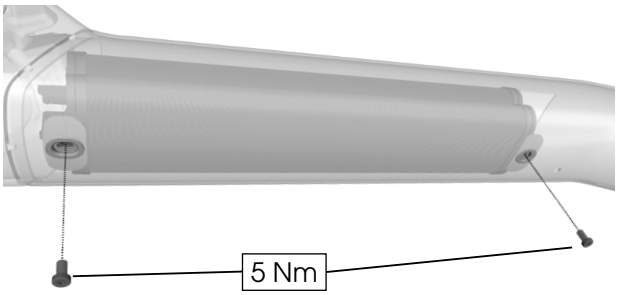

7. Tuck the excess charging cable slack into the drive side of the downtube.

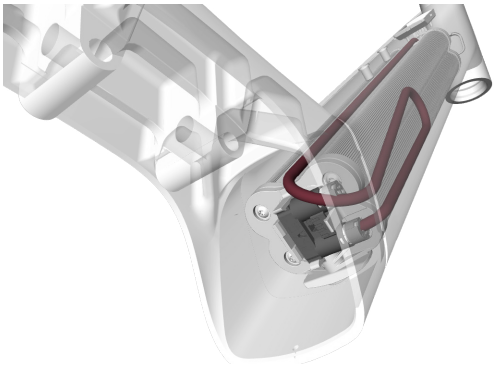

Stem

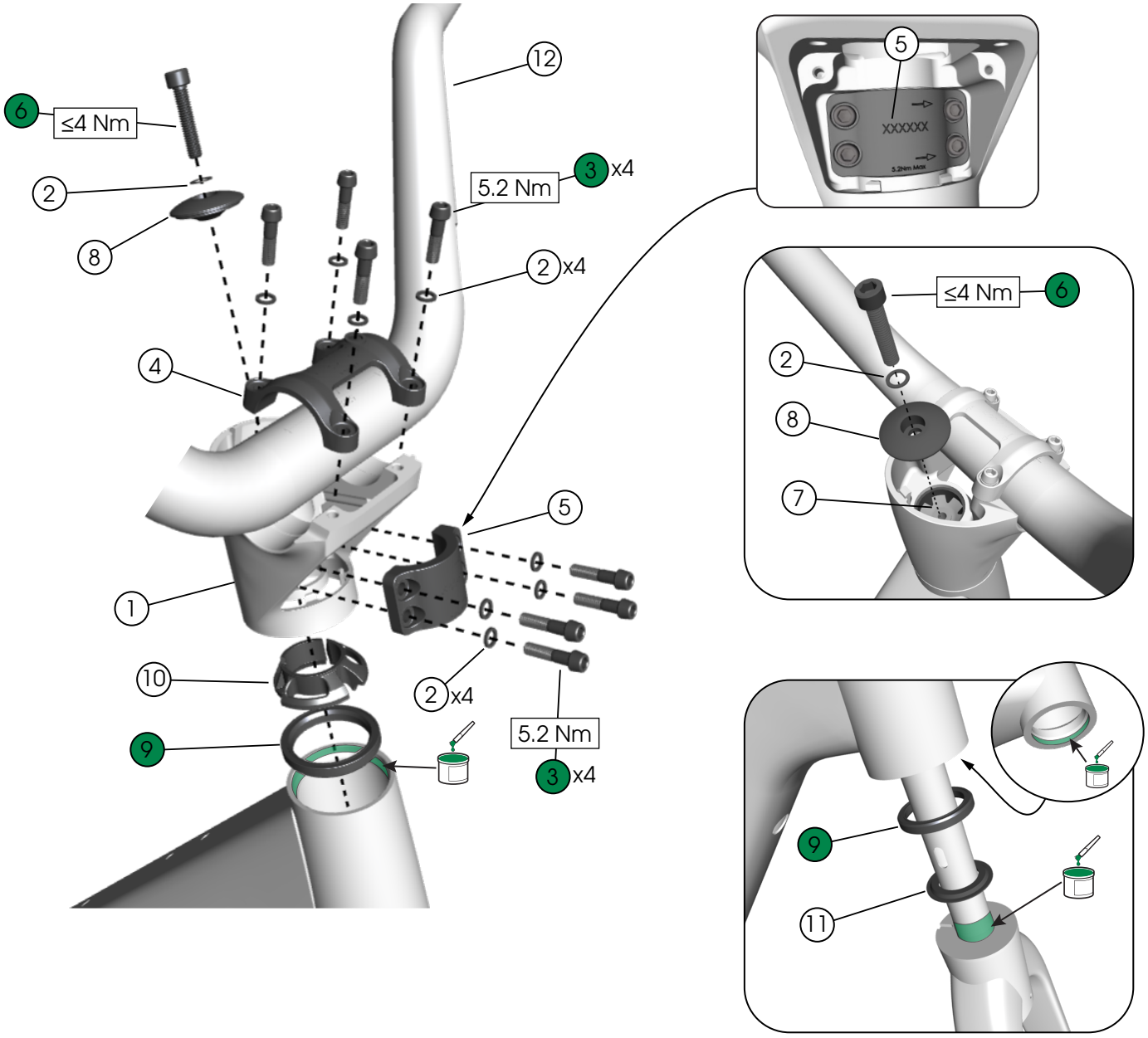

1. Stem
2. Washers
3. Fasteners
4. Stem clamp
5. Faceplate

W5311617

6. Fastener
7. Star fangled nut
8. Top cap
9. Bearings — *W540243*
10. Split ring — *W5316322*
11. Crown race reducer — *W5283141*
12. Handlebar — *W5319144*

Stem cover

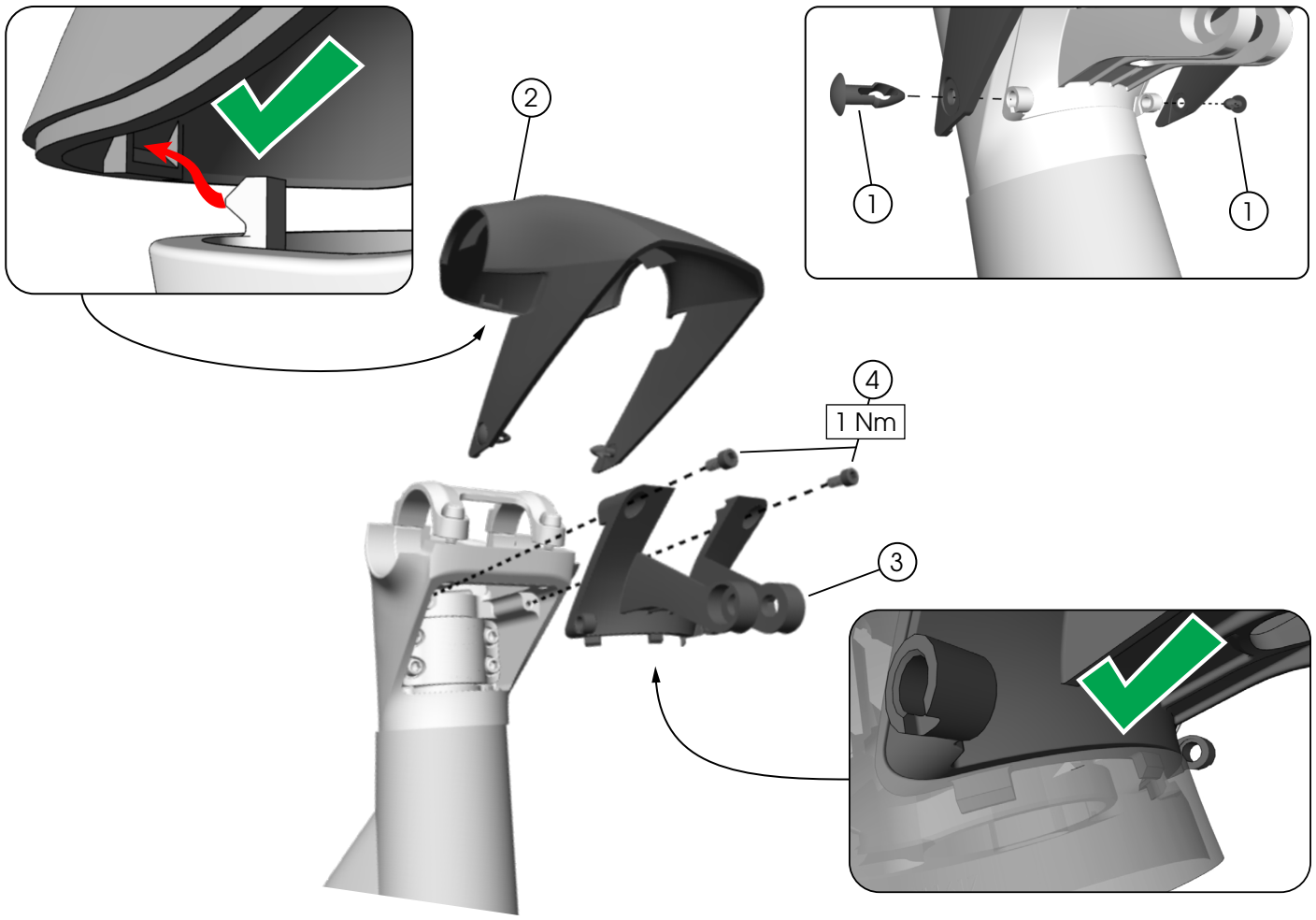

1. Rivets — *W308963*
2. Stem cover
   - Standard — *W5310988*
   - Bosch Kiox — *5318693*



3. Light bracket — *W5310989*
4. Fasteners (M3 x 6 mm) — *W438743*

Install the stem

NOTE: This procedure shows a full assembly from a frame without all components installed. You may have more components assembled — skip ahead as needed.

BEFORE YOU BEGIN: All cables/housings must be routed through the down tube.

NOTE: If you are rerouting cables, you must remove the drive unit and battery to adjust cable lengths when installing the headset.

1. Grease the upper bearing and bearing bores.
2. Route the cables through the upper bearing down to the bottom bracket area.

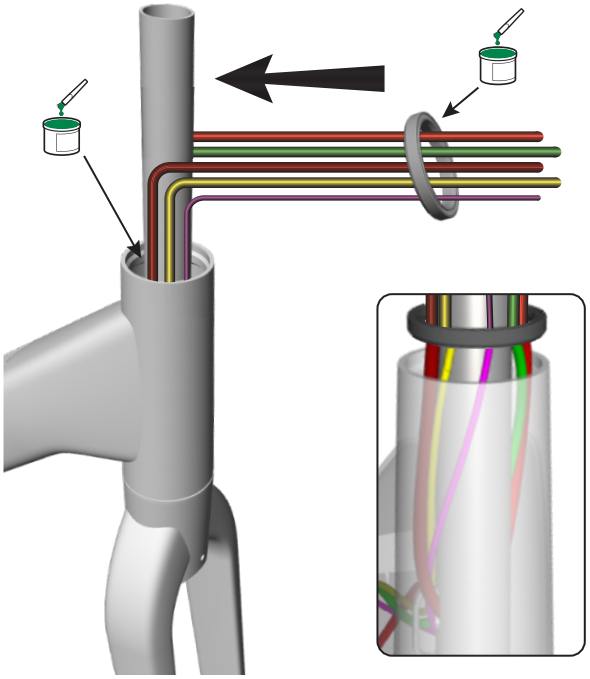

3. Route the split ring down the steerer tube and seat it onto the headset.

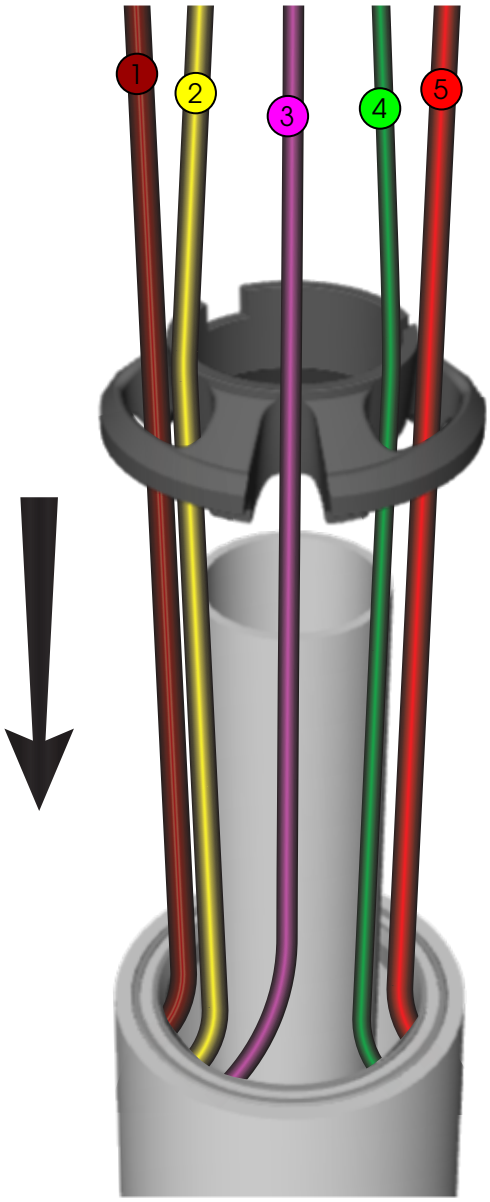

1. Front brake hose
2. Remote cable
3. Light wire
4. Rear derailleur housing
5. Rear brake hose

Install the stem (continued)

4. Route the cables through the stem and slide the stem onto the steerer tube.

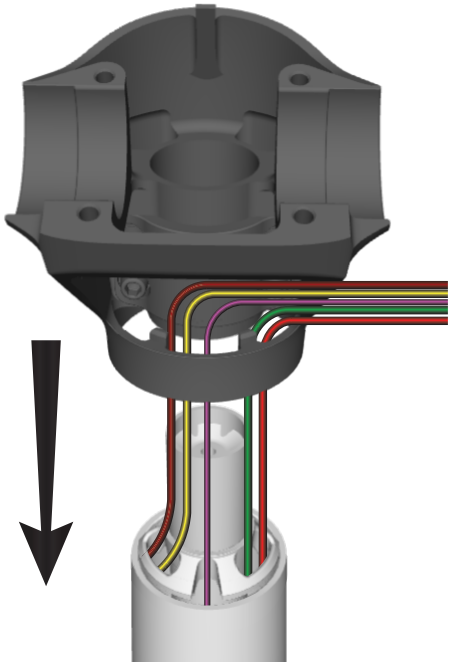

5. Install the top cap.

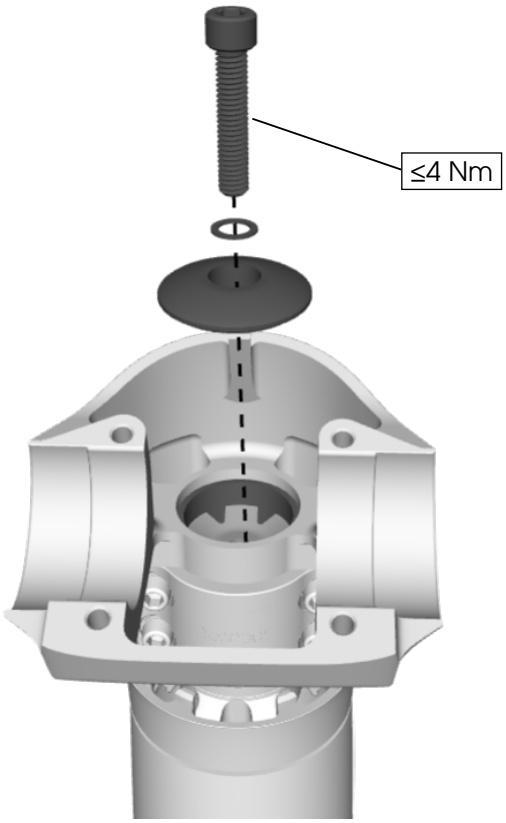

6. Align the stem with the front wheel and loosely tighten all faceplate fasteners. Then, fully tighten the two non-driveside bolts, then the two driveside bolts.

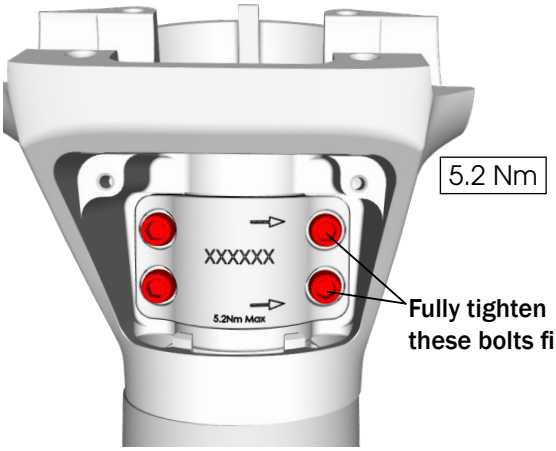

7. Seat the stem clamp over the handlebar and loosely tighten all four fasteners.

NOTE: Make sure the notches are aligned.

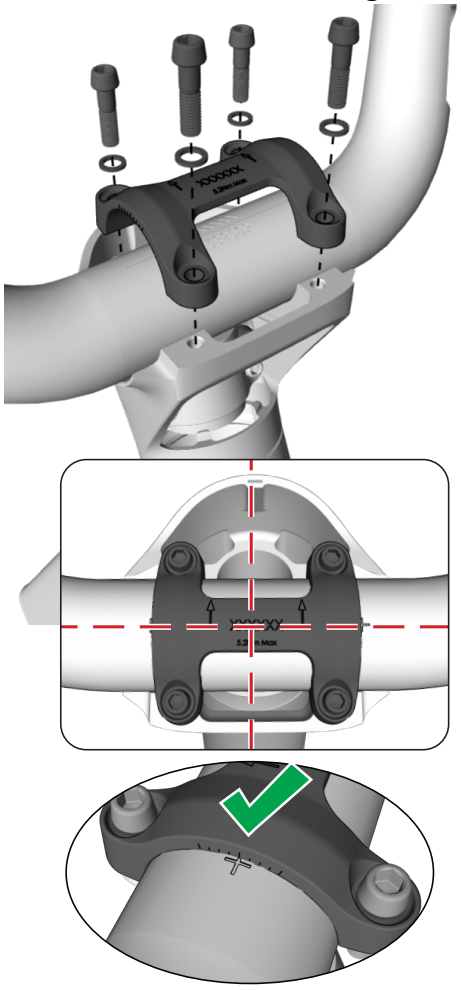

Install the stem (continued)

8. Fully tighten the two rear fasteners. Then, fully tighten the two front fasteners.

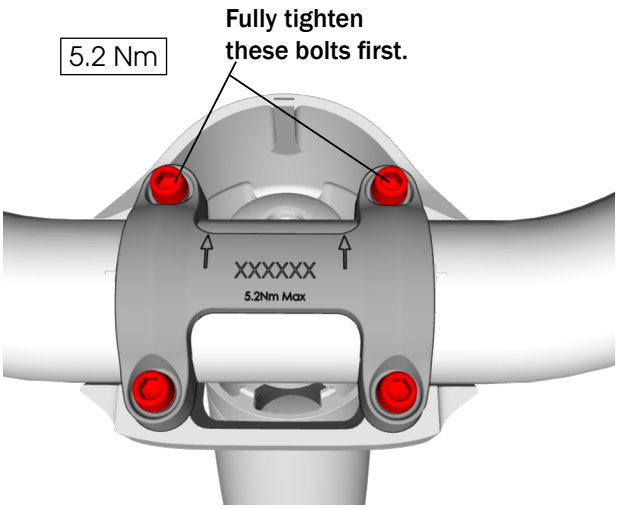

9. Install the light bracket.

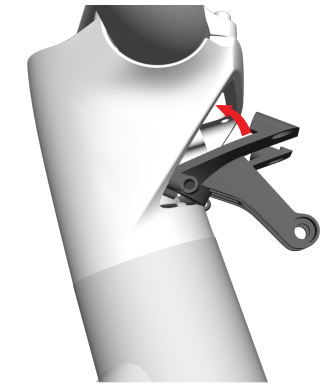

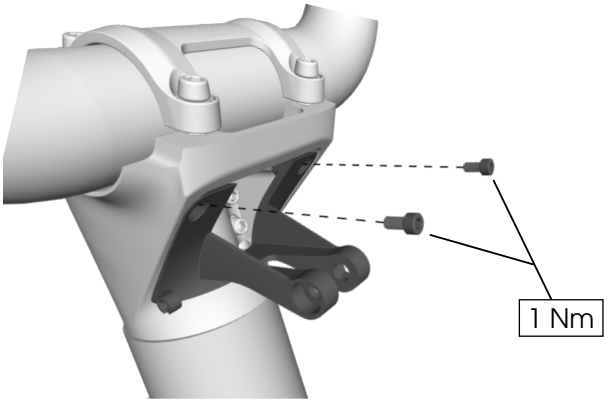

10. Install the stem cover.

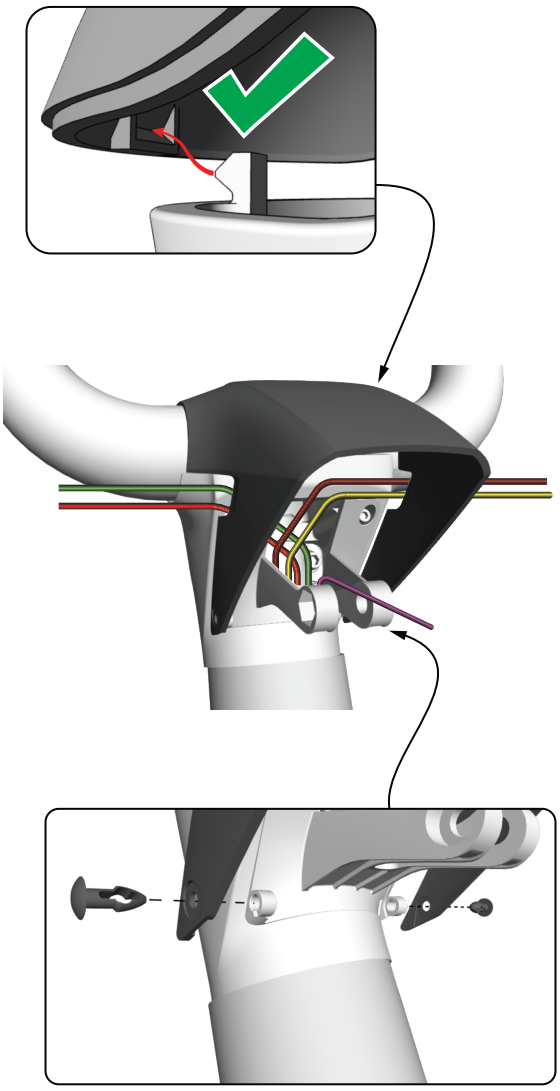

11. Connect handlebar levers and e-system components.

Headset — standard stem

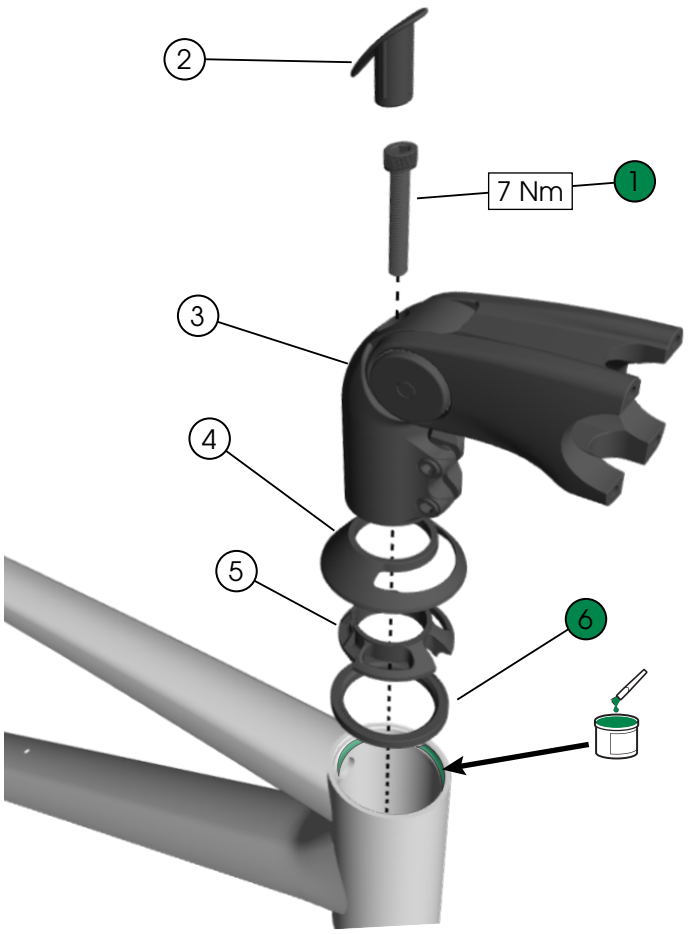

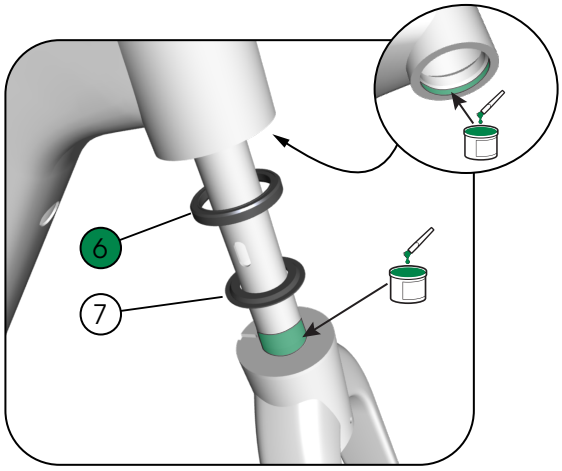

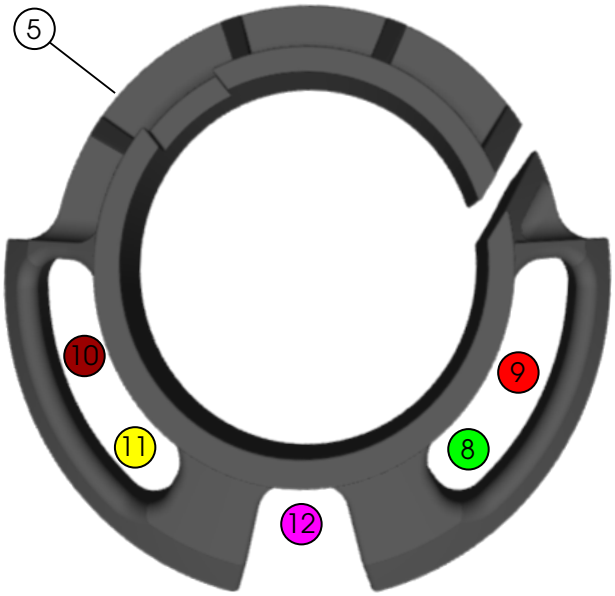

1. Fastener (M8 x 33 mm)
2. Stem plug — *602179*
3. Adjustable stem (85 mm)

5262988

4. Bearing cover — *W5260269*
5. Split ring — *5319267*
6. Bearings — *W540243*
7. Crown race reducer — *W5283141*
8. Rear derailleur housing
9. Rear brake hose
10. Front brake hose
11. Remote cable
12. Light wire

Rear derailleur hanger

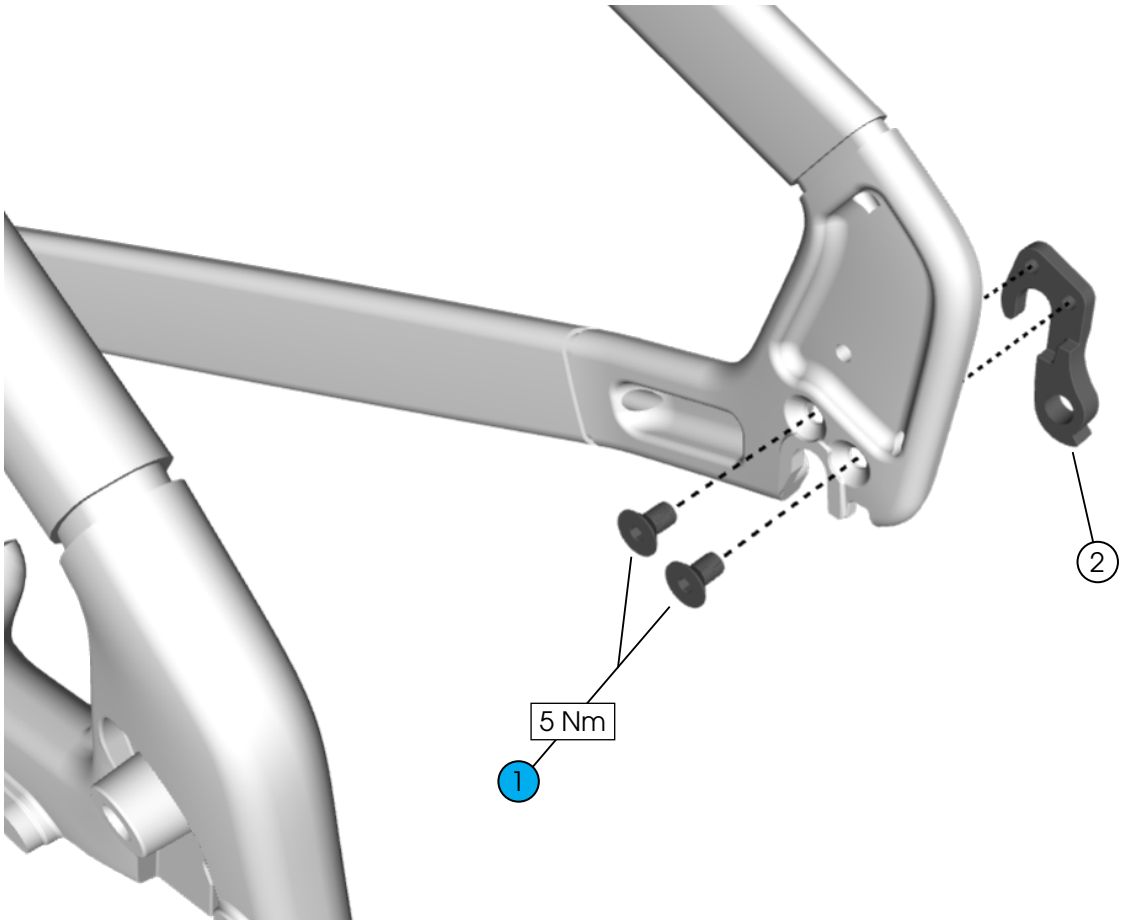

1. Fasteners (M3 x 6.5 mm) — *W300580*
2. Rear derailleur hanger — *W5309067*

Chainguard

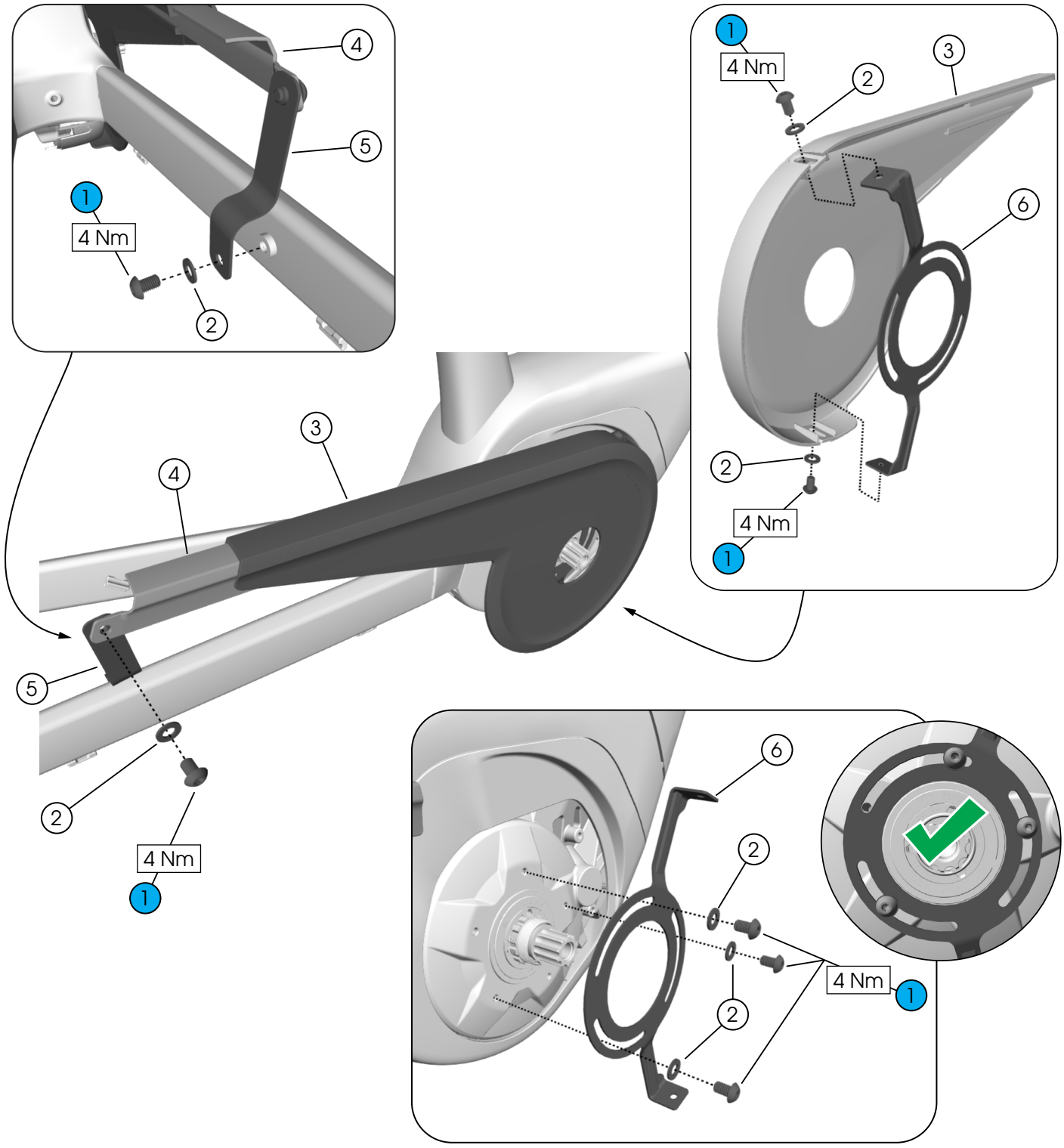

1. Fasteners (M5 x 8 mm) — *W549307*
2. Washers (M5) — *5317316*
3. Chainguard
4. Chainguard end piece
5. Chainstay bracket — *W558816*
6. Drive unit bracket

Install the chainguard

NOTE: The bracket positions vary slightly for different frame sizes. To position the chainguard properly, you need to ensure fit first.

1. Loosely install the drive unit and chainstay brackets (you will fully tighten them later).

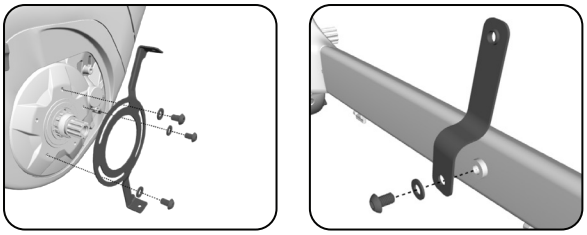

2. Loosely install the chainguard.

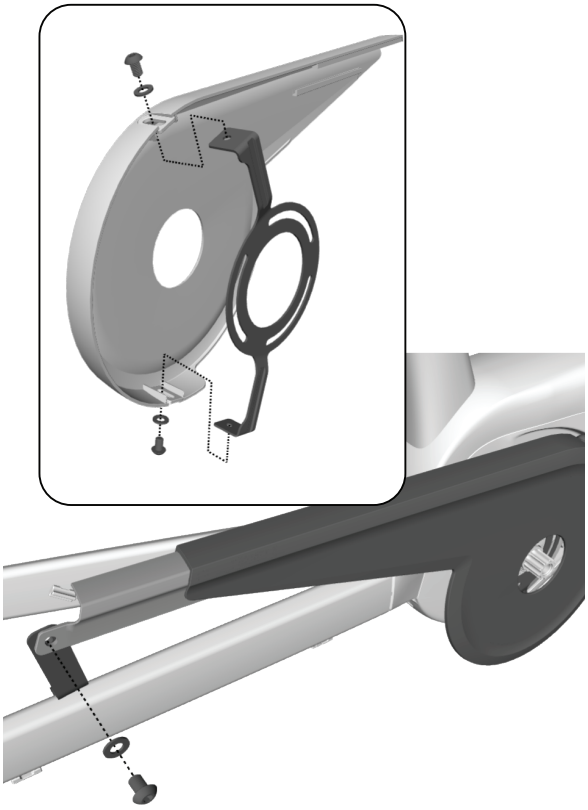

3. Tighten the rear chainstay bracket fastener.

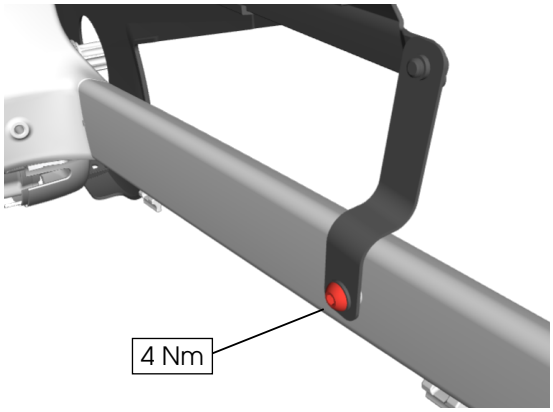

4. Remove the chainguard (see step 2).
NOTE: Be careful not to rotate the drive unit bracket.
5. Tighten the drive unit bracket fasteners.

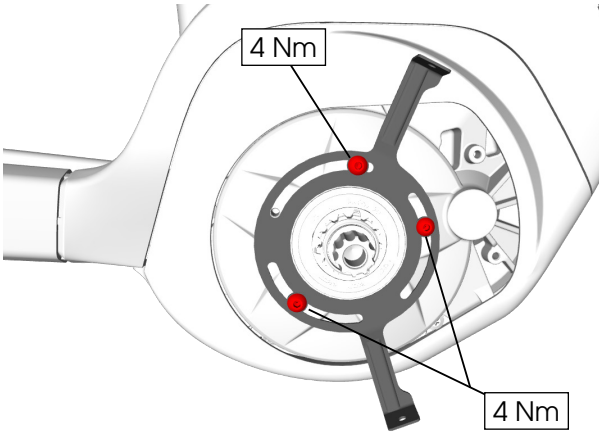

6. Install the chainring and chain.
7. Install the chainguard and tighten the fasteners to 4 Nm (see Step 2).
8. Install the crank.

Rear rack

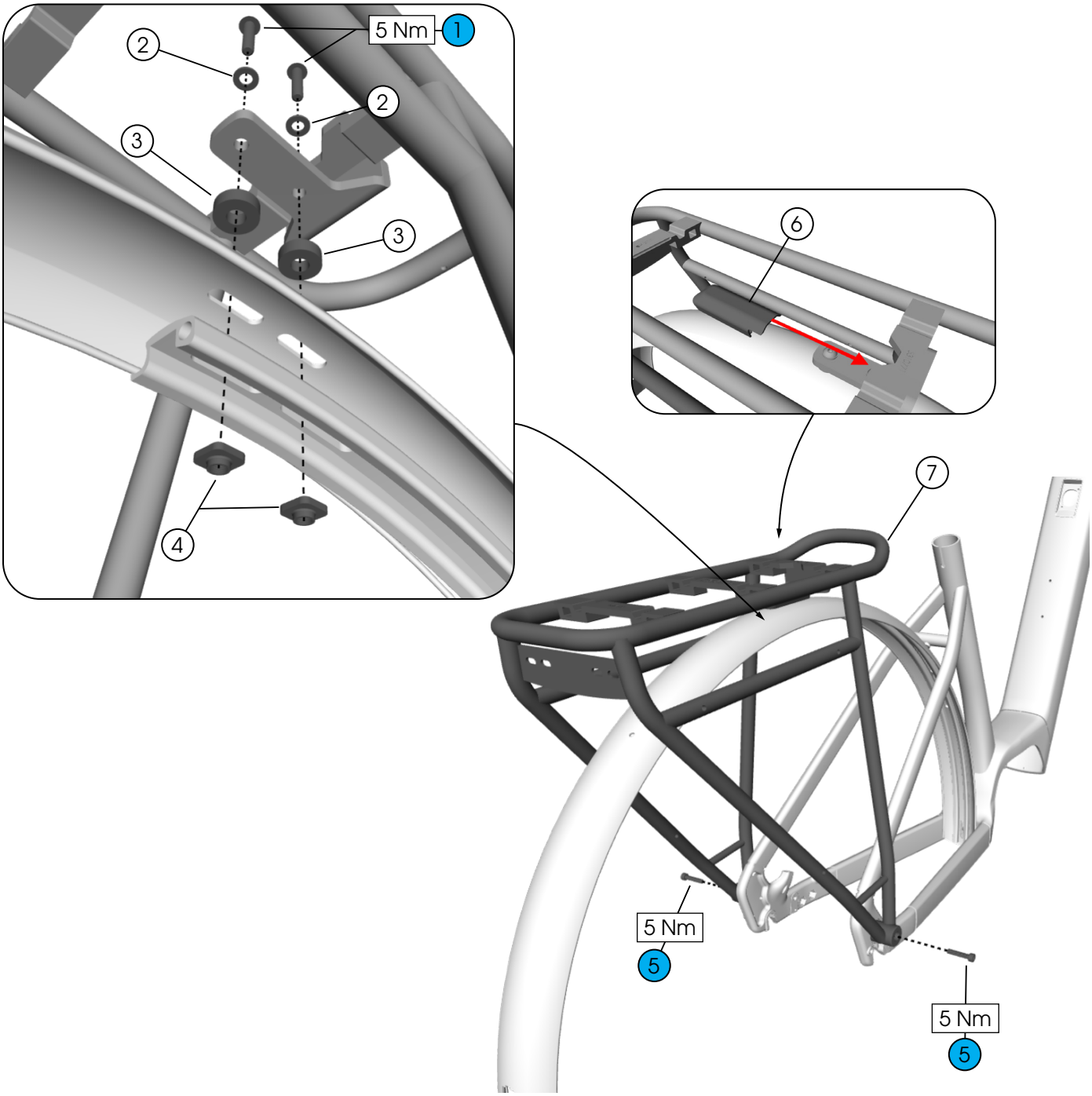

1. Fasteners (M5 x 20 mm) — *5317310*
2. Washers (M5) — *5317316*
3. Spacers (5 mm) — *5260275*
4. Mounting nuts — *W5251640*
5. Fasteners (M5 x 25 mm) — *5308514*
6. Bolt cover — *W5318891*
7. Rear rack — *W5310771*

Rear fender

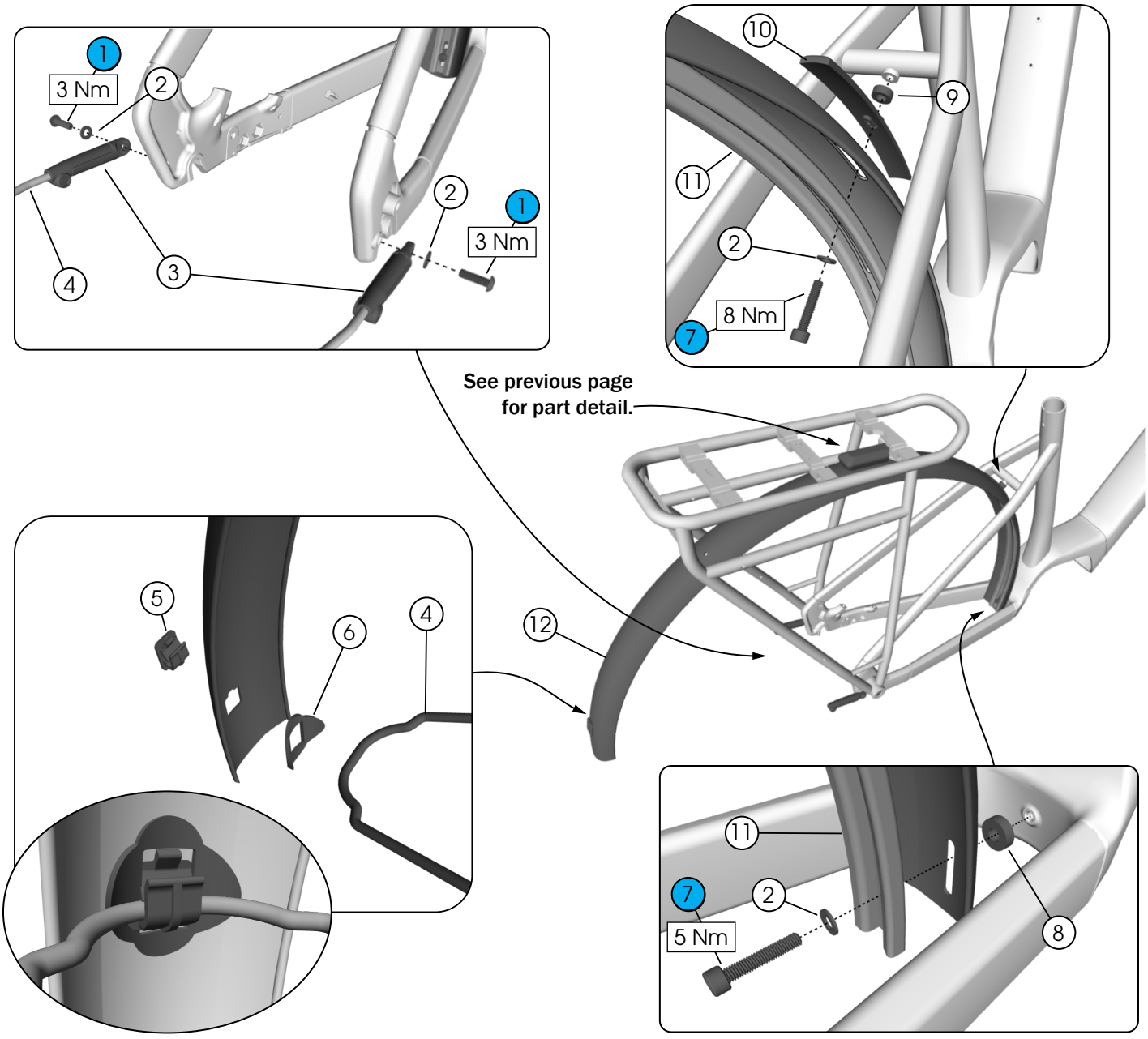

1. Fasteners (M5 x 16 mm) — *5260274*
2. Washers (M5) — *5317316*
3. Stay mounts — *5258260*
4. Fender stay, wide (330 mm) — *W5254585*
5. Stay clip
6. Damping rubber

   — *5258253*
7. Fasteners (M5 x 25 mm) — *5308514*
8. Spacer (15 mm x 5 mm) — *5260275*
9. Spacer (12 mm x 5 mm) — *5307541*
10. Slot cover — *W1049294*
11. Fender strut — *W5310775*
12. Fender
    - Small — *W5312171*
    - Medium — *W5312172*
    - Large — *W5312173*

Front fender

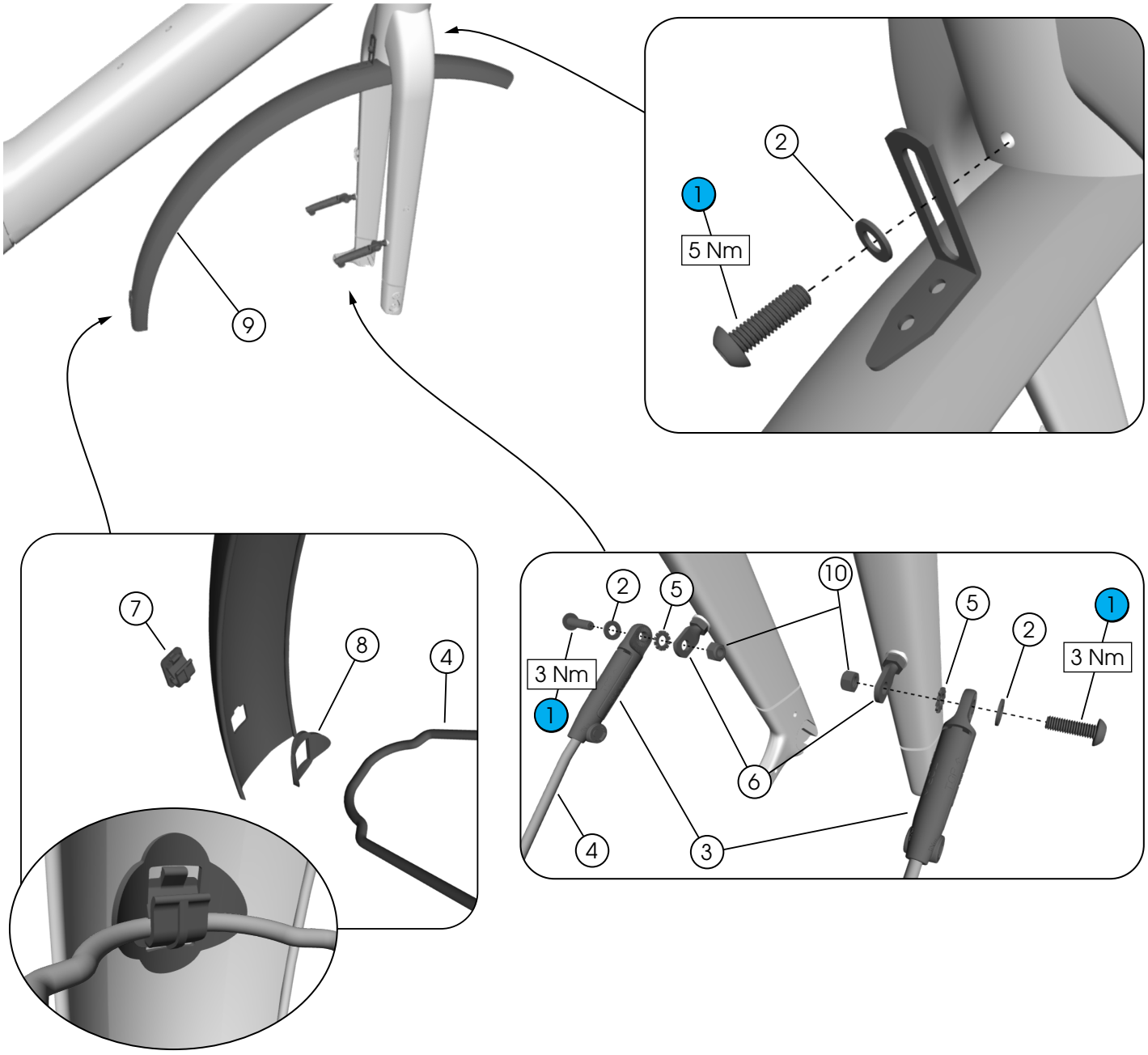

1. Fasteners (M5 x 16 mm) — *5260274*
2. Washers (M5) — *5317316*
3. Stay mounts — *5258260*
4. Fender stay (300 mm)
   - Rigid fork — *W5316533*
   - Suspension fork — *W5316532*
5. Knurled washer
6. Bolt-nut — *W317707*
7. Stay clip
8. Damping rubber
   - *5258253*
9. Front fender
   - Rigid fork — *W5310868*
   - Suspension fork — *W5311797*
10. Locknuts, Nylock (M5)

Ring lock

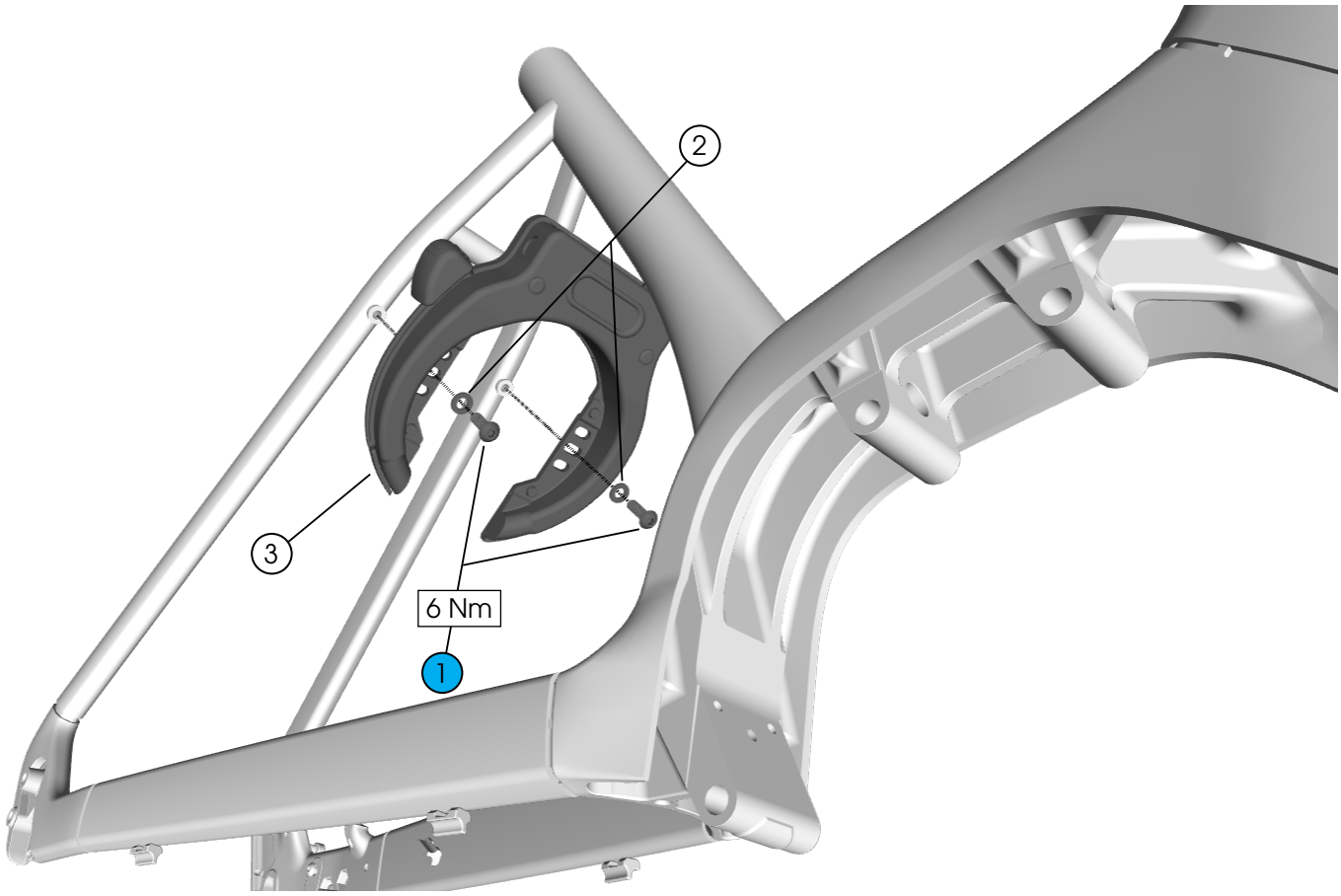

1. Fasteners (M5 x 12 mm) — *5308514*
2. Washers (M5) — *W521137*
3. Ring lock — *592162*