TREK

Mountain

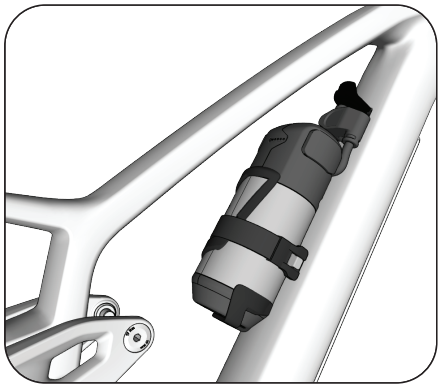

See the service manual for fastener information.



5322899



5289555

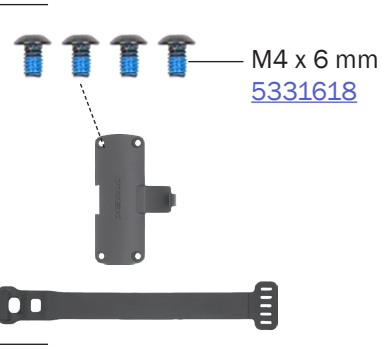

M4 x 6 mm
5331618

5325177

5289575



M3 x 8 mm
5346103

Road or City







W5300001

See the service manual for fastener information.



5322899



5289555

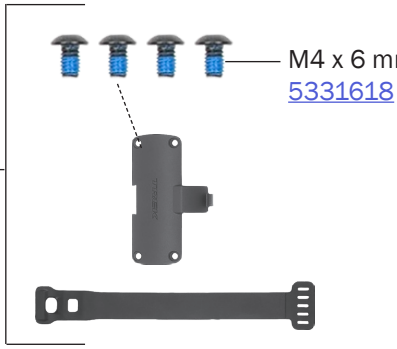

M4 x 6 mm
5331618

5325177

5289576



M3 x 8 mm
5346103

Copyright 2025 Trek Bicycle Corporation All Rights Reserved