TREK

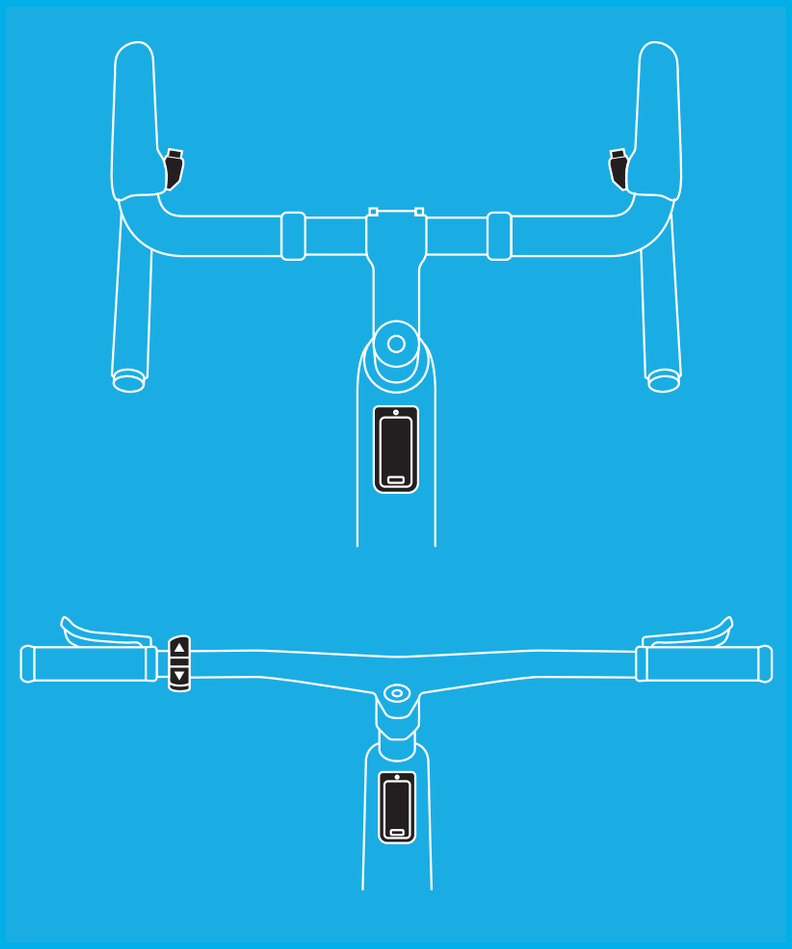

E-BIKE QUICK START GUIDE

IMPORTANT SAFETY INSTRUCTIONS. SAVE THESE INSTRUCTIONS.

Welcome to the family!

This quick start guide explains the basic operation of the TQ system on your e-bike. For the most up to date information or to view this guide in additional languages, please use the QR codes or links below.

Even if you've been riding a bike for years, you should read this guide, as well as:

- The Bicycle Owner's Manual that came with your e-bike
- The TQ Charger Manual that came with your e-bike
- The comprehensive TQ system manual, found online at:

trekbikes.com/manuals



These manuals contain important safety information and useful suggestions about the proper use and maintenance of your e-bike and how to properly dispose of electrical components. If you do not have access to a computer or the Internet, you can request a printed manual from your local authorized retailer.

⚠ **WARNING: Read all instructions before using this product. Save this manual.**
What you don't know could seriously hurt you or others. Be smart. Read and know before you go.

- To reduce the risk of injury, close supervision is necessary when the product is used near children.
- Do not put fingers or hands into the product.
- Do not use this product if the flexible power cord or output cable is frayed, has broken insulation, or any other signs of damage

The A-weighted emission sound pressure level at the driver's ears is less than 70 dB(A).

A fews things to know about riding your new e-bike

1. **Start slow**
   We know — fast is fun. But e-bikes take a bit of getting used to. It may be tempting to ramp your e-bike up to the fastest setting right away, but we recommend taking it nice and easy the first few rides. Start on the lowest assist setting and learn the feeling of pedal assistance.

2. **Brake sooner**
   E-bikes are heavier than normal bikes, and they move faster. More power, more speed, and more weight. Once you get moving, you'll need more time to react, so you should start slowing down sooner on your e-bike than you would on a normal bike. When you're getting used to your new e-bike, start braking with a lighter hand and a gradual pull of the brake levers. And never grab just your front brake lever — brake with both front and rear evenly.

3. **You're faster than you look**
   E-bikes look just like regular bikes, so drivers and pedestrians might not expect you to be riding as fast as your e-bike allows. Ride with extra care and pay greater attention to your surroundings.

All bike rules still apply

While your new e-bike will bring you a new level of freedom and fun, you're still responsible for knowing and following all the rules of the road, paths, and trails in your area. Have fun out there, but with greater speed, there is greater responsibility.

Bike ON|OFF



ON: Press and release
OFF: Press and hold

Lights ON|OFF **(If connected to the TQ Smart Box)**



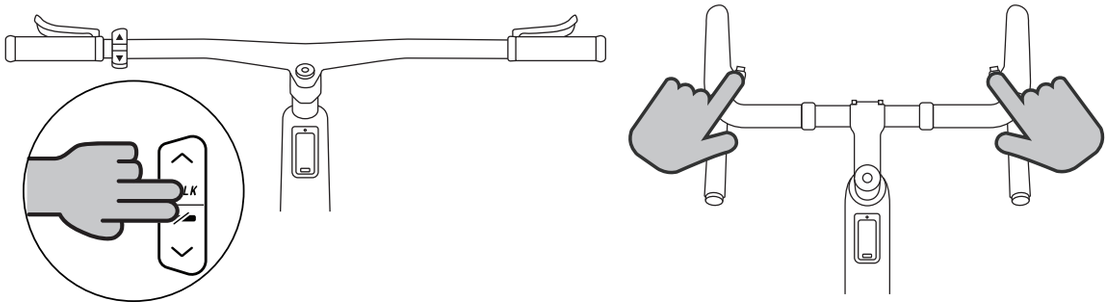

ON|OFF: Press both buttons at the same time

Note: If front and/or rear lights are included with your e-bike, they may be programmed to turn ON or OFF when the e-bike is turned ON or OFF.

Pedal assistance

Select an assist mode

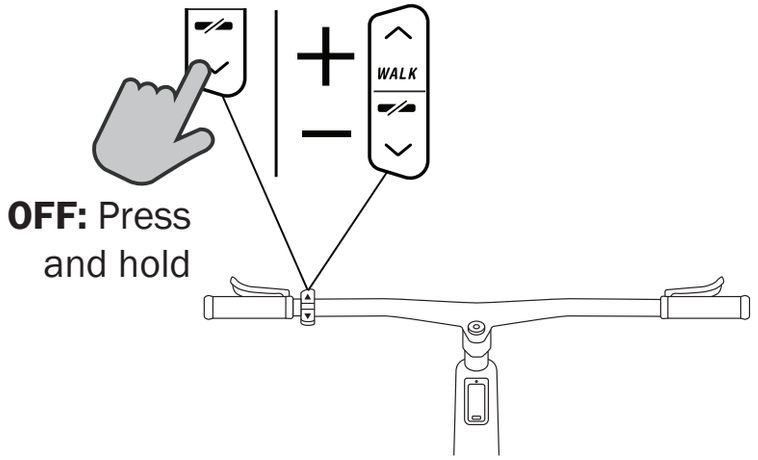

OFF: Press and hold

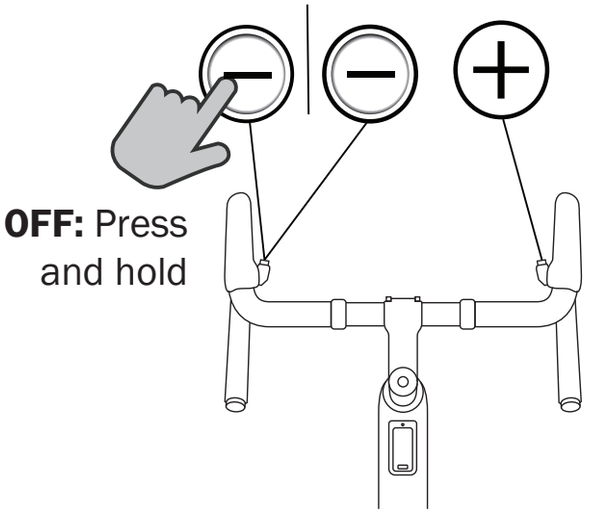

OFF: Press and hold

Assist level on the display

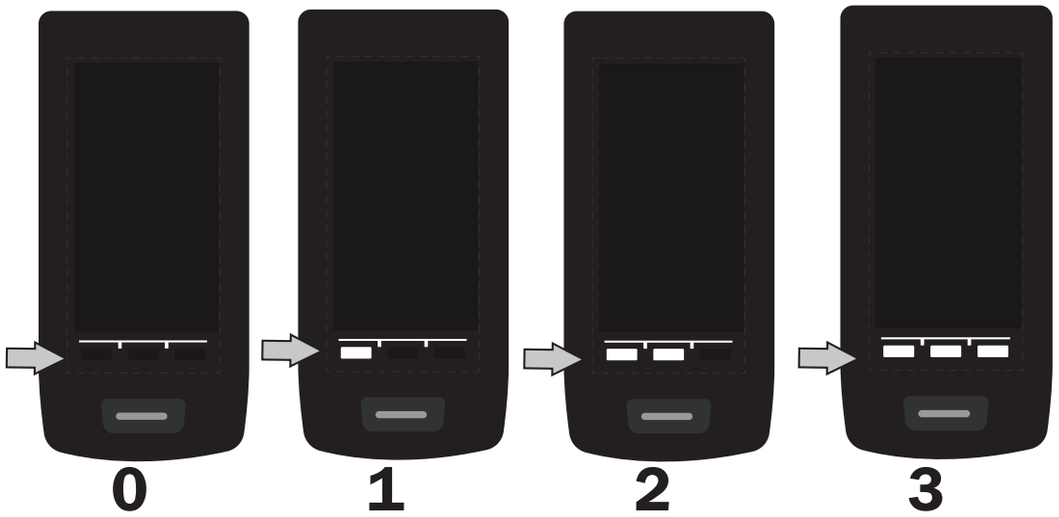

Pedal assistance

Stops when:

- You stop pedaling
- You reach the maximum assist speed (Maximum speeds vary by region.)

Restarts when:

- You start pedaling again
- You are pedaling and your speed drops below the maximum assist speed

Walk assistance

Walk assistance provides a little push for those times when you are walking or pushing your bike. Walk assistance is only available on bikes with the TQ remote.

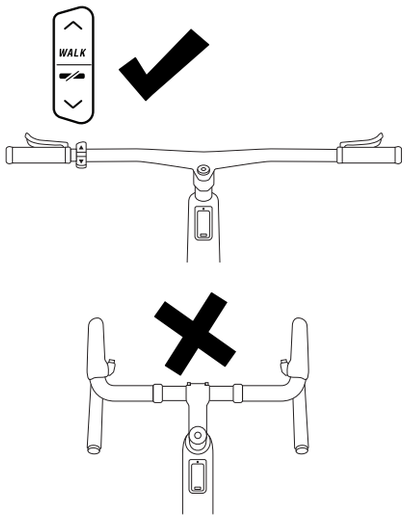

⚠ **WARNING:** Walk assistance should only be used when you are walking your bike. Never use walk assistance when you are riding your bike, or in situations where the wheels are not touching the ground.



Activate



Press and hold the UP button while you walk the bike.

TIP: Your bike gear affects walk assistance. Shift gears to find the ideal combination of speed and torque for the terrain.

Exit



Or



Or

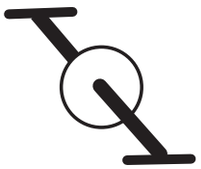

Start pedaling

Or



30
Idle the bike for 30 seconds

Scroll through the screens

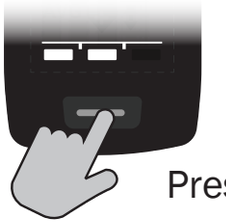

Press to scroll

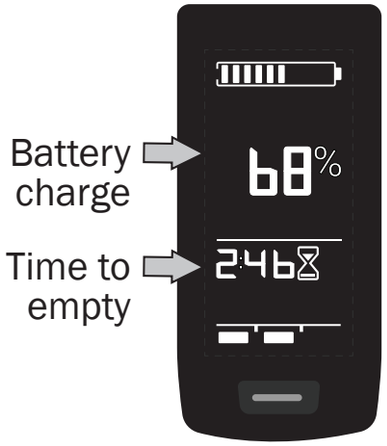

Battery charge and time to empty



Distance and time to empty



Power (Watts)

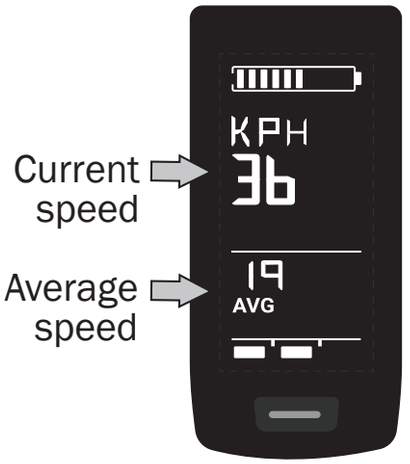

Speed

Battery

Charge the battery

The battery is supplied partially charged. For best performance, charge the battery to 100% before riding your e-bike.

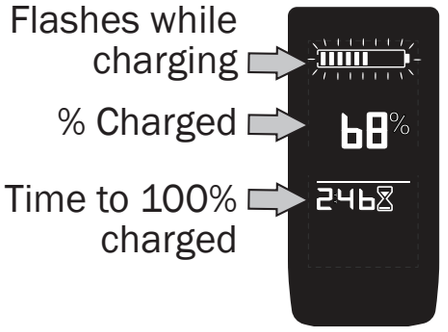

INSTRUCTIONS PERTAINING TO RISK OF FIRE or ELECTRIC SHOCK

⚠ WARNING: Charge the battery properly

Refer to the TQ charger manual included with your bike for all charging instructions and safety information. Follow the safety warnings when charging your battery. Failure to follow the warnings may result in serious injury or death.

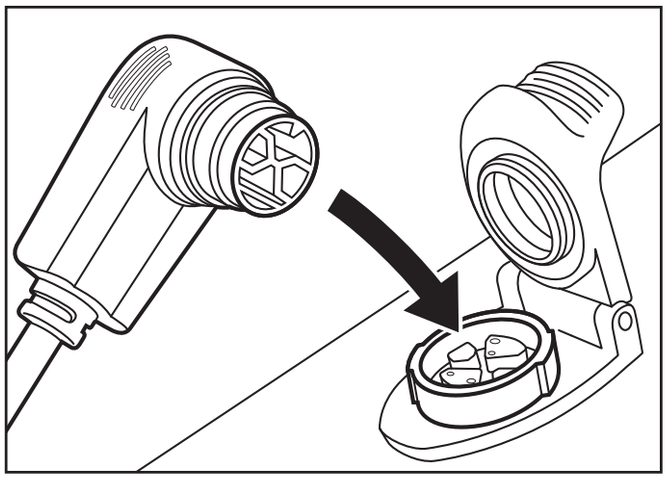

Charge port locations vary by bike.

Important: Close the charge port cover after charging the battery.

Caring for your battery and e-bike

Along with the fun of having an e-bike comes a few special warnings to keep you and your bike safe.

INSTRUCTIONS PERTAINING TO RISK OF FIRE or ELECTRIC SHOCK

Follow these safety warnings when caring for your battery and e-bike.
Failure to follow these warnings may result in serious injury or death.

⚠ WARNING: Install accessories carefully

Consult with your Trek-authorized Trek dealer before installing any accessories. Only use the fasteners included with your bicycle or the accessory. Using the wrong bolt in the wrong place could cause a short circuit in the electrical system and/or damage to the battery which might lead to over-heating. A battery that has been severely impacted could catch fire. If you suspect damage to your battery, visit your local bike shop immediately to have the battery inspected.

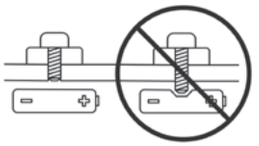

⚠ WARNING: Store the battery properly

- Store your e-bike battery in a dry, ventilated location that is away from moisture, heat sources, and combustible or easily flammable objects.
- Store your battery at the recommended temperature. Storing your battery outside of this range could damage the battery, affect its performance, or cause the battery to catch fire.

Storage temperature: 50° – 68° F (10° – 20° C)
Operating temperature: 23° – 104° F (-5° – 40° C)

- Monitor the battery charge. Keep the battery charged to a minimum of 30% to 60%. The battery can be damaged by deep discharge.
- When the battery charge is restored, remove the battery from the charger. Do not store your battery connected to the charger.

⚠ WARNING: Transport your e-bike safely

- The TQ drive system adds weight to the bicycle. Overloading a bike car rack can result in death or serious injury. Refer to your bicycle rack manual to be sure it is compatible with your e-bike.
- Do not leave your battery in a vehicle or in a location that may become very hot or very cold. Make sure the battery is within the recommended ambient operating temperature range of 23° – 104°F (-5° – 40°C) during transport. Extreme temperatures could damage the battery or create a fire hazard.
- Check with local transportation authorities regarding special rules or laws for transporting your e-bike via public transportation, such as buses or trains.

⚠ WARNING: Wash your e-bike gently

Do not submerge your e-bike or its components in water or wash them with a high-pressure hose. Water could contact the electrical system and damage it.

⚠ WARNING: Repair and maintain your e-bike safely

Never attempt to open any parts of the electrical system. Always contact your local bike shop to service any parts of the electrical system.

SAVE THESE INSTRUCTIONS

The Trek Central app

Everything in the palm of your hand

Connect to your e-bike like never before with the Trek Central app.

- View your e-bike and ride stats
- Plan your route and navigate
- Tune your motor
- And much more

Learn more on trekbikes.com

Download the app

Download on the App Store

Available on the Google Play

Quad Lock Wireless Charger

If your bike has the Quad Lock® feature, to enable wireless charging, you will need a Quad Lock phone case designed for your phone. These are available for purchase at an authorized Trek retailer or at quadlockcase.com.

Visit trekbikes.com for Quad Lock® Wireless Charger user manual.

Compliance certification

INDUSTRIE CANADA

HMI Includes ICES Approved Module – IC ID: 8017A-MDBT42

Quad Lock® Charger Models QL-5289 and QL-5290 – IC ID: 27134-QLO

IC Caution:

This device contains license-exempt transmitter(s) that comply with Innovation, Science and Economic Development Canada's license-exempt RSS(s). Operation is subject to the following two conditions:

(1) this device may not cause interference, (2) this device must accept any interference, including interference that may cause undesired operation of the device.

RF Exposure Statement:

This equipment complies with ISED radiation exposure limits set forth for an uncontrolled environment. This equipment should be installed and operated with a minimum distance of 20cm between the radiator and a human body.

Quad Lock Charger (QL-5289 and QL-5290):

H-Field	-19.26dBuA/m at 10m
Frequency band	104.60kHz to 173.60kHz

FCC

HMI Includes FCC Approved Module – FCC ID: SH6MDBT42

Quad Lock Charger Models QL-5289 and QL-5290 – FCC ID: 2AOU9-QLO

This device complies with part 15 of the FCC Rules. Operation is subject to the following two conditions:

(1) This device may not cause harmful interference, and (2) this device must accept any interference received, including interference that may cause undesired operation.

NOTE: This equipment has been tested and found to comply with the limits for a Class B digital device, pursuant to part 15 of the FCC Rules. These limits are designed to provide reasonable protection against harmful interference in a residential installation.

This equipment generates, uses and can radiate radio frequency energy and, if not installed and used in accordance with the instructions, may cause harmful interference to radio communications. However, there is no guarantee that interference will not occur in a particular installation.

If this equipment does cause harmful interference to radio or television reception, which can be determined by turning the equipment off and on, the user is encouraged to try to correct the interference by one or more of the following measures:

— Reorient or relocate the receiving antenna.

— Increase the separation between the equipment and receiver.

— Connect the equipment into an outlet on a circuit different from that to which the receiver is connected.

— Consult the dealer or an experienced radio/TV technician for help.

Changes or modifications not expressly approved by the party responsible for compliance could void the user's authority to operate the equipment.

This equipment complies with FCC radiation exposure limits set forth for an uncontrolled environment. This equipment should be installed and operated with a minimum distance of 20cm between the radiator and a human body.

© 2025 Trek Bicycle Corporation | Rev3