TREK

TQ

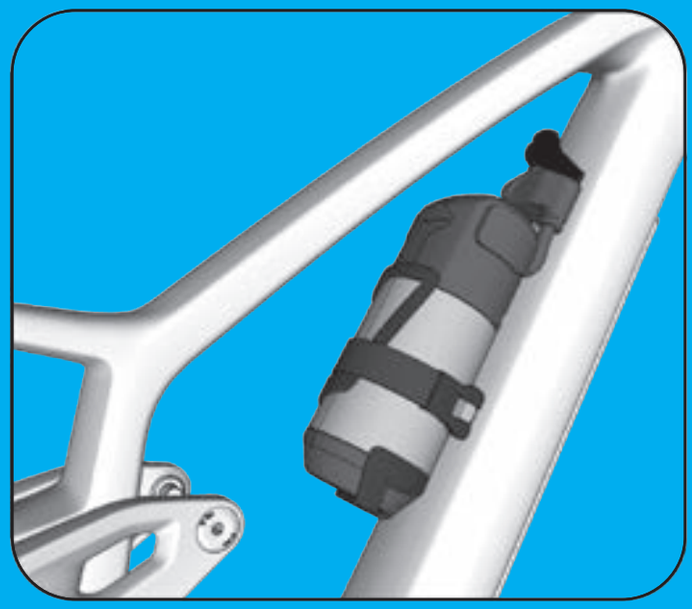

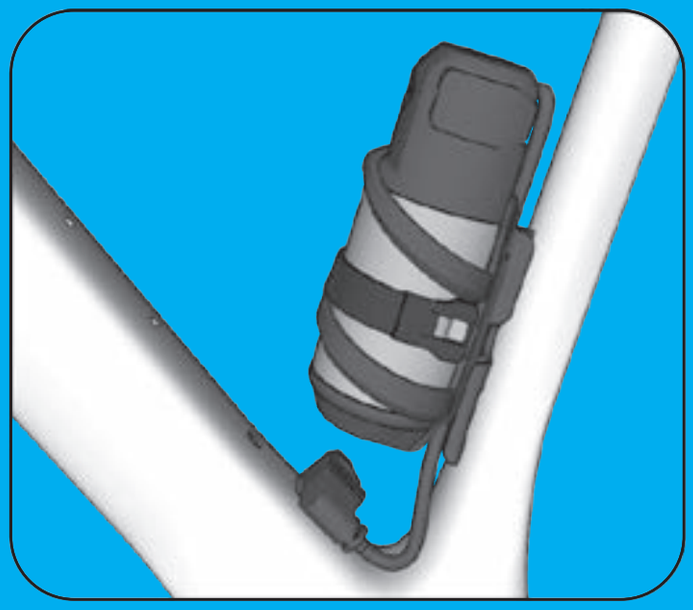

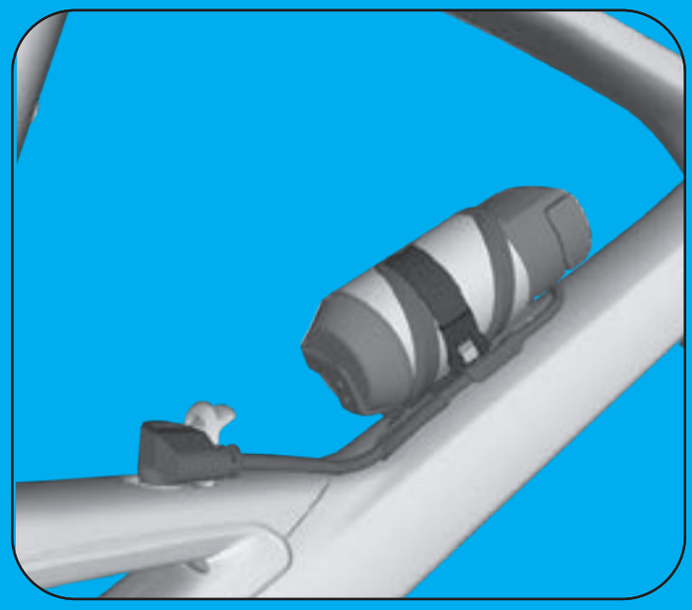

Range Extender
Installation Instructions

IMPORTANT SAFETY INSTRUCTIONS. SAVE THESE INSTRUCTIONS.

This manual explains how to install a TQ Range Extender on a Trek bicycle. For the most up to date information or to view this guide in additional languages, please use the QR code or link below.

⚠ WARNING: Read all instructions before using this product. Save this manual.
What you don't know could seriously hurt you or others.
Be smart. Read and know before you go.
Please be sure to also read the safety information in the TQ HPR Range Extender manual included in the box and found online at tq-ebike.com

trekbikes.com/manuals

Parts you will need

For all bikes:



TQ Range Extender
5289555



Trek side-load water bottle cage



Water bottle cage bolts (max 14 mm long)



Strap, plate and fasteners
5325177

+ For mountain bikes:



Cable
5289575

+ For road or city bikes:



Cable guide
W5300001



Cable
5289576

Installation

Your Range Extender is intended for use with a Trek side-load water bottle cage. Other cages are not recommended.

Road bikes

Install the water bottle cage.

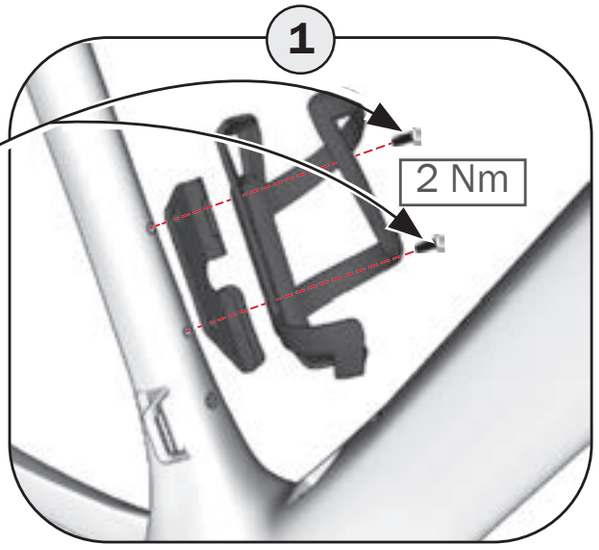

14 mm max bolt length. Longer bolts could damage the internal bike battery.

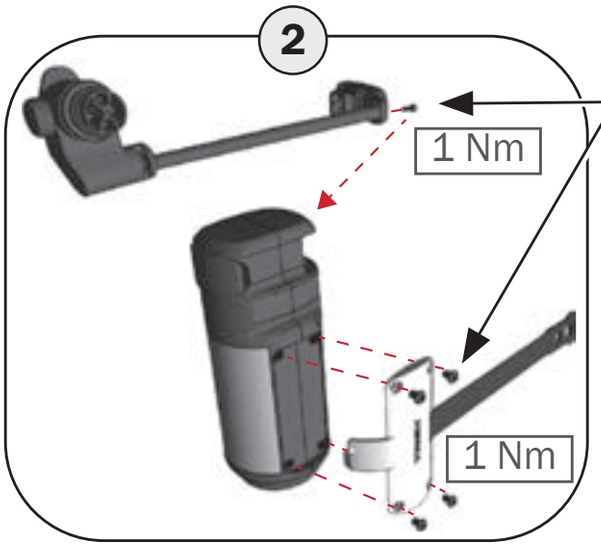

Install the cable and strap.

8 mm max bolt length. Longer bolts could damage the Range Extender.

Route the cable through the plate.

Plug in.

Press the charge port cover onto the plug.

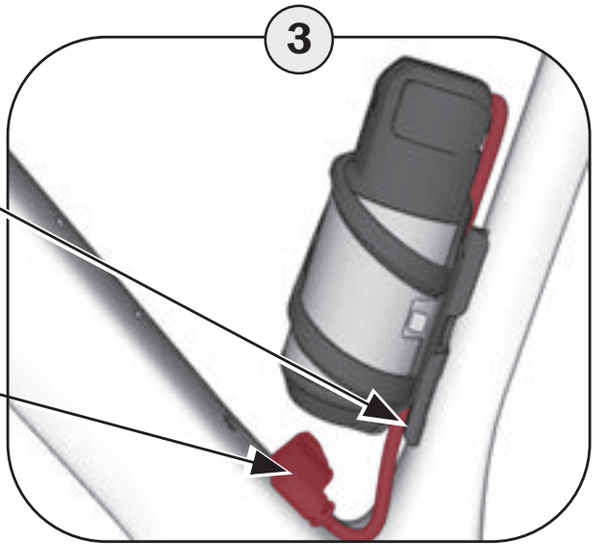

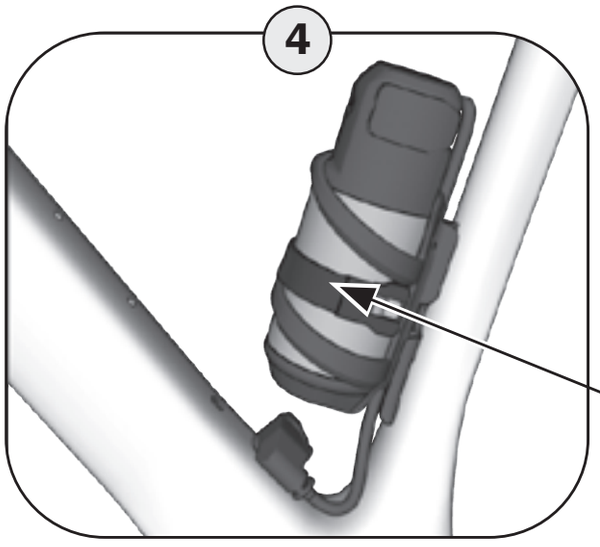

Wrap and secure the strap.

City bikes

Install the water bottle cage.

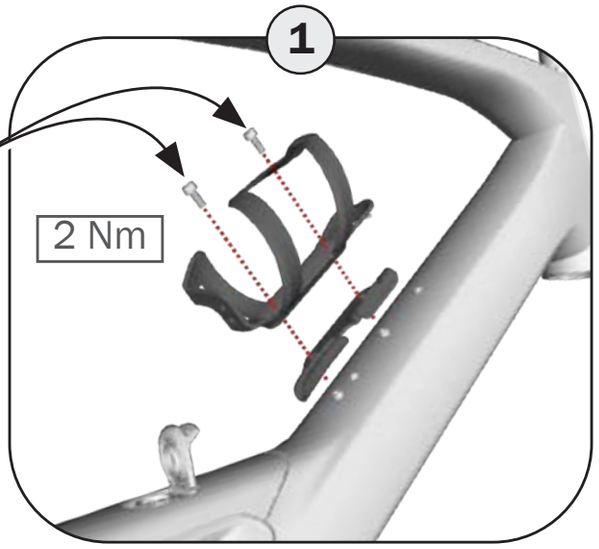

14 mm max bolt length. Longer bolts could damage the internal bike battery.

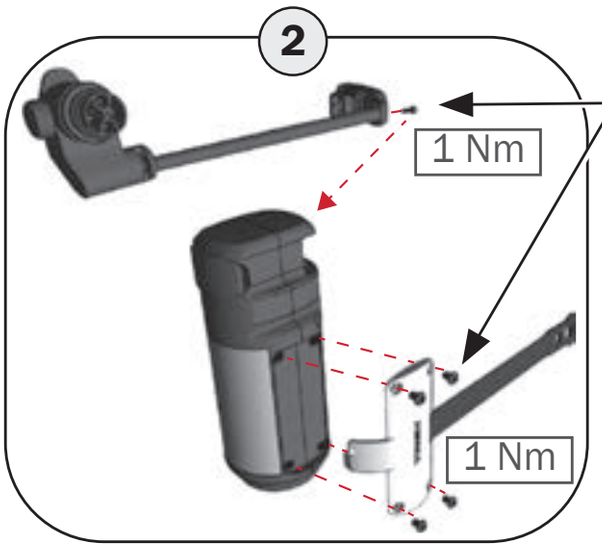

Install the cable and strap.

8 mm max bolt length. Longer bolts could damage the Range Extender.

Route the cable through the plate.

Plug in.

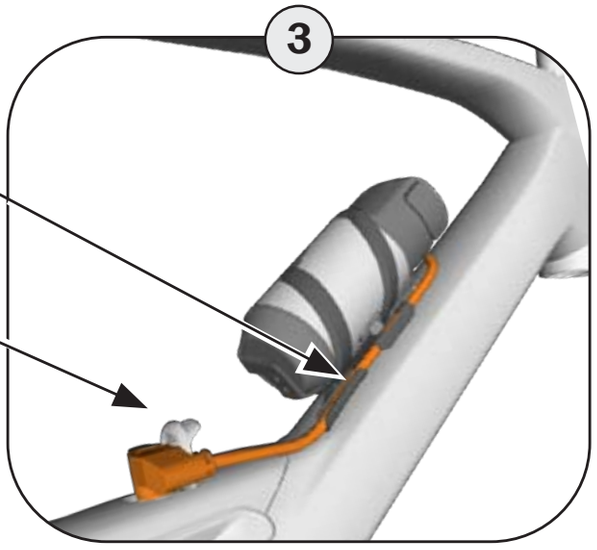

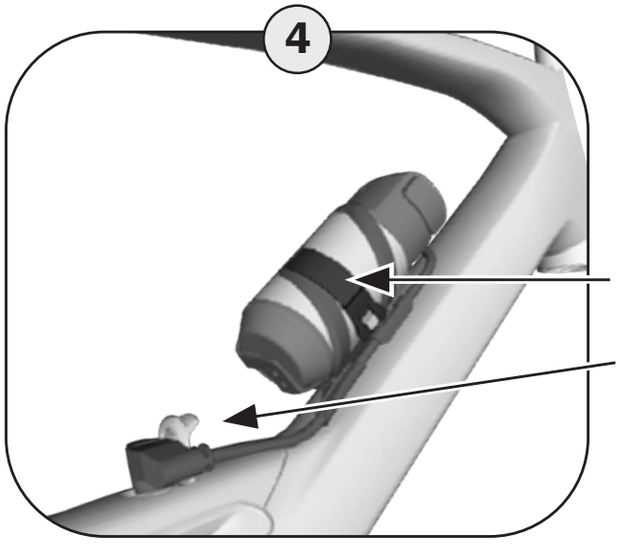

Wrap and secure the strap.

Press the charge port cover onto the plug.

Mountain bikes

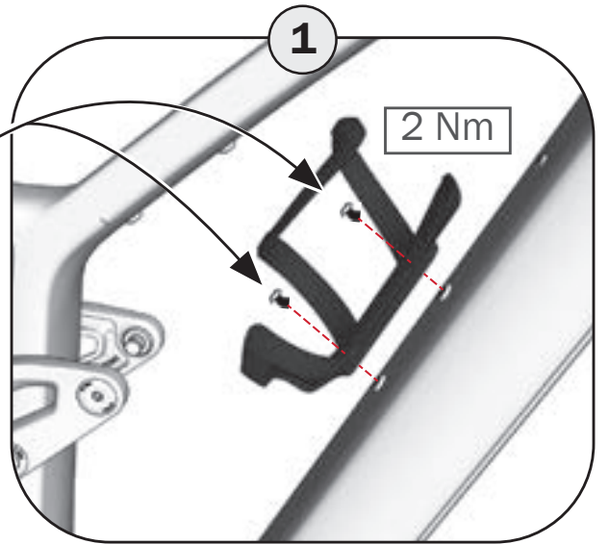

Install the water bottle cage.

14 mm max bolt length. Longer bolts could damage the internal bike battery.

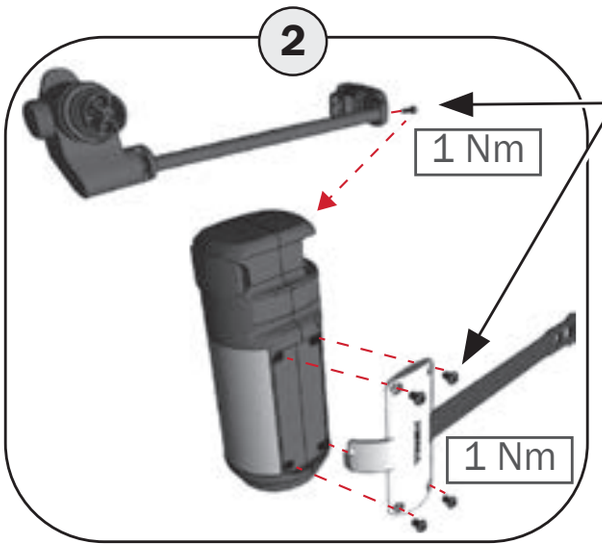

Install the cable and strap.

8 mm max bolt length. Longer bolts could damage the Range Extender.

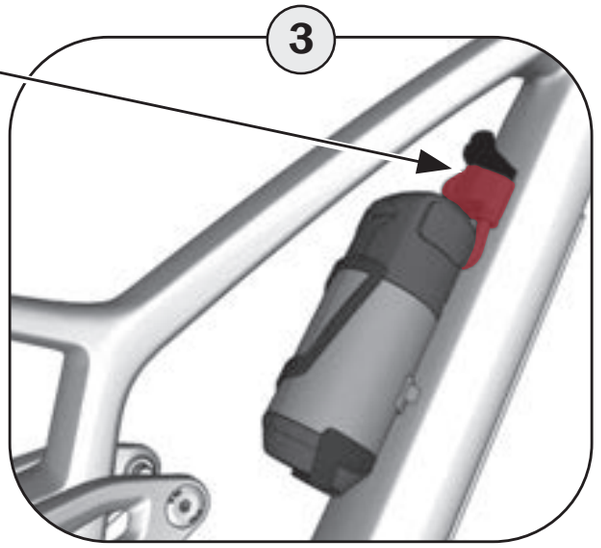

Plug in.

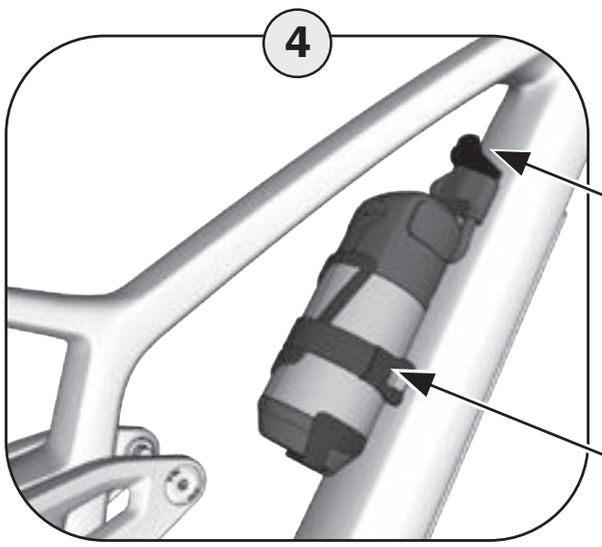

Press the charge port cover onto the plug.

Wrap and secure the strap.

Monitor the battery charge

The e-bike will drain the Ranger Extender first, then draw power from the internal bike battery.

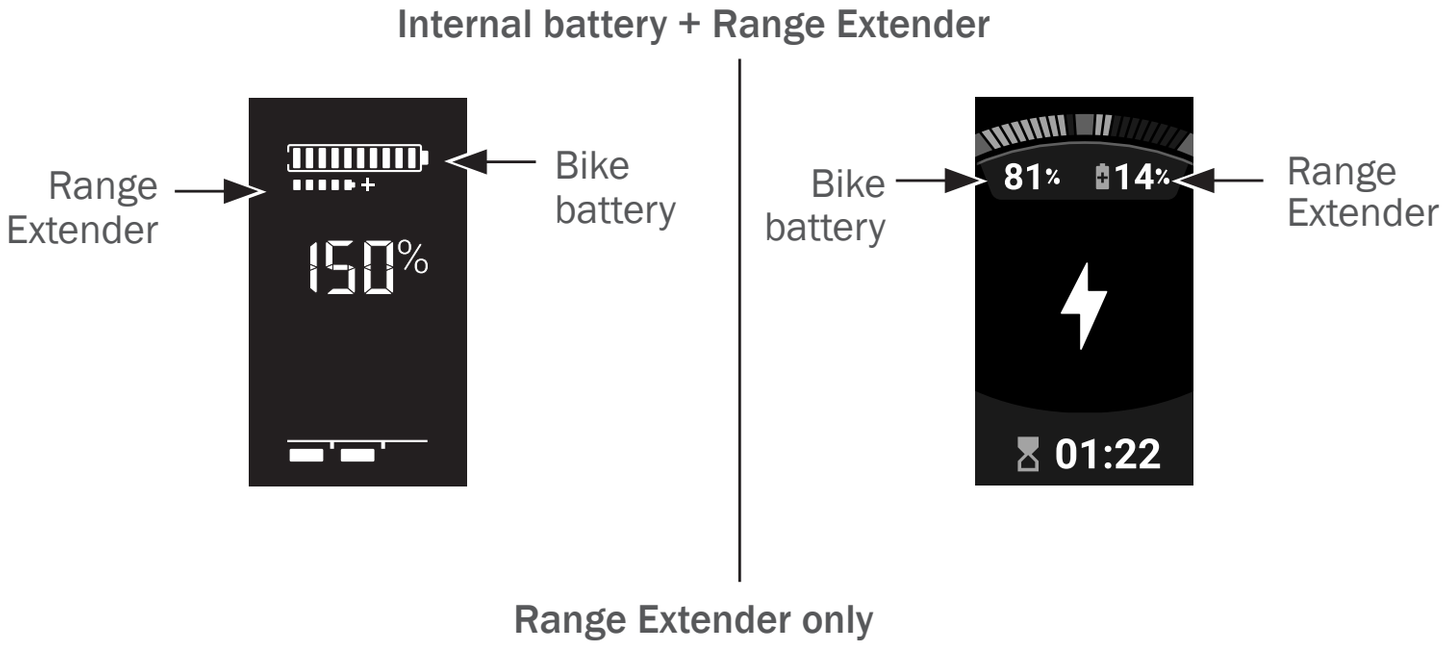

When storing the Range Extender for an extended time period, check it every 6 months and recharge it to approx. 30% to 60%.

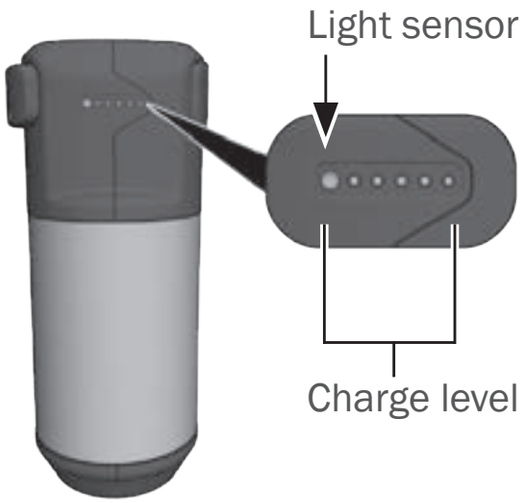

Charge the battery

The Range Extender can be charged while connected to the e-bike or separately.

Range extender connected to the bike battery



WARNING: If the Range Extender is attached to the bike while charging, for example, in the water bottle cage, the Range Extender MUST also be plugged in to the charge port on the bike to disable the drive system while charging. Failure to do so could cause damage to the bike or personal injury.

Range extender only



© 2025 Trek Bicycle Corporation