Service Information

2014 Ticket FS Suspension Assembly

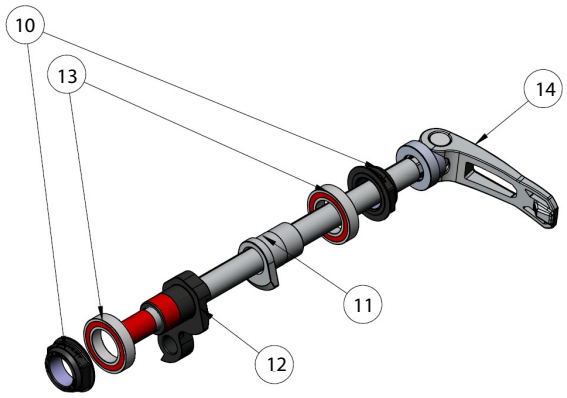

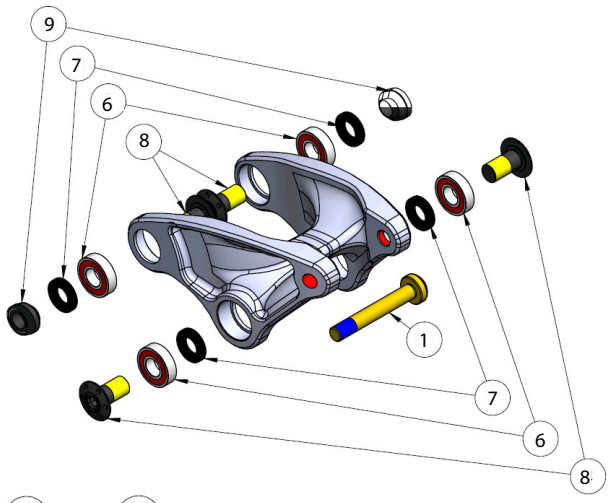

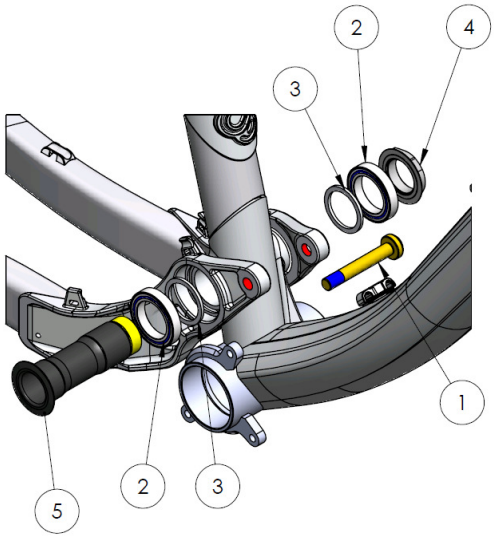

Note: All threaded fasteners in the assembly have a retention compound on either the bolt or nut threads. If a fastener is removed after initial installation, clean the threads and reapply a removeable strength threadlocker such as LOCTITE 243. Failure to do so may result in fasteners loosening during use.

Parts for 2014 Ticket FS Assembly				
Item Number	Part Number	Description	Assembly Details	QTY
1	W282876	Bolt, M8x1.25x54mm	Torque to 10 Nm	2
2	W253804*	Cartridge Bearing, 6805-2RS, O.D. 37mm, I.D. 25mm, W 7mm		2
3	W304514*	Washer, I.D. 25.0mm, O.D. 31.0mm, Th 2.0mm		2
4	W290054*	Nut, M24x1.5, ?mm Thick, 30mm Flats	Torque to 34 Nm	1
5	W285676	Axle, 25mm Shaft, ???mm Long, M12 Hex, M24x1.5 external thread		1
6	W275322	Cartridge Bearing, 6900-2RS O.D. 22mm, I.D. 10mm, W 6mm		4
7	W292474	Washer, I.D. 10.0mm, O.D. 18.5mm, Th 3.0mm		4
8	W305185	Bolt, M10x1.0x19mm	Torque to 150 IN-LBS	4
9	W327734	Nut, M10x1.0, Mates to seat stay, small		2
10	W301803**	Nut, ABP Convert Pivot, M17x1.0, 23mm Flats	Torque to 22Nm	2
11	W301804**	ABP Convert Pivot Bolt, Non-drive side for 142x12mm axle, M17x1.0 external thread		1
12	W301805**	ABP Convert Pivot Bolt, Drive side for 142x12mm axle, M17x1.0 external thread, M12x1.75 internal thread, M10x1.0 der hanger thread		1
13	W305083**	Cartridge Bearing, MR1728LLU, O.D. 28mm, I.D. 17mm, W 6mm		2
14	W310123	Skewer, Maxle FR 12x192mm		1
	*427338	Session Main Pivot Kit, includes all items marked with *		
	**427343	ABP Convert 142 Pivot Kit, includes all items marked with **		