TREK

Product Support

Ticket Signature Frame Parts

Revised 2/28/2014

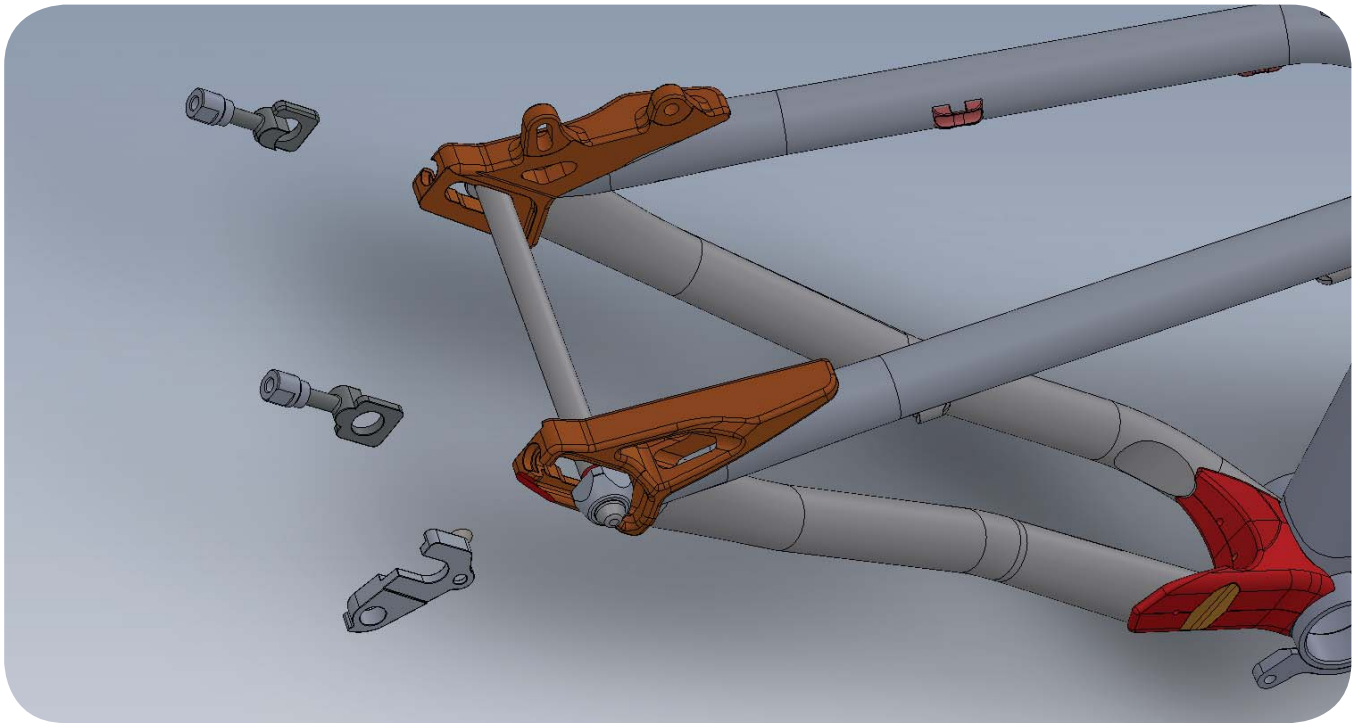

Model Year:	2010 & 2011	2014	
Hub Dimensions:	135x10mm	142x12mm	
Item Description	Part Number	Part Number**	Quantity Needed
Chain Tensioner (each)	W295260	W437849	2
Axle and Nut	W302003	440533	1
Rear Derailleur Hanger*	W295257	W439688	1

* Hanger Includes M5x0.8x8mm bolt

** 2014 parts available Spring 2014

All models feature ISCG 05 tabs and threaded bottom brackets.







2010 Ticket Signature	2011 Ticket Signature	2014 Ticket Signature
Frame Only	Frame and Complete Bike	Frame Only