SUPERCALIBER

Product Support

MY20 Supercaliber Parts Quick Reference

Item	Description	Part Number	Qty	Note
1	Knockblock Chip	536723	1	
2	M4x16mm Bolt	W532763	4	
3	“Control Freak” Cable Guide	W519232	2	
4	Downtube Cable Cinch	W513977	1	
5	Dual Exit Guide	W583855	1	

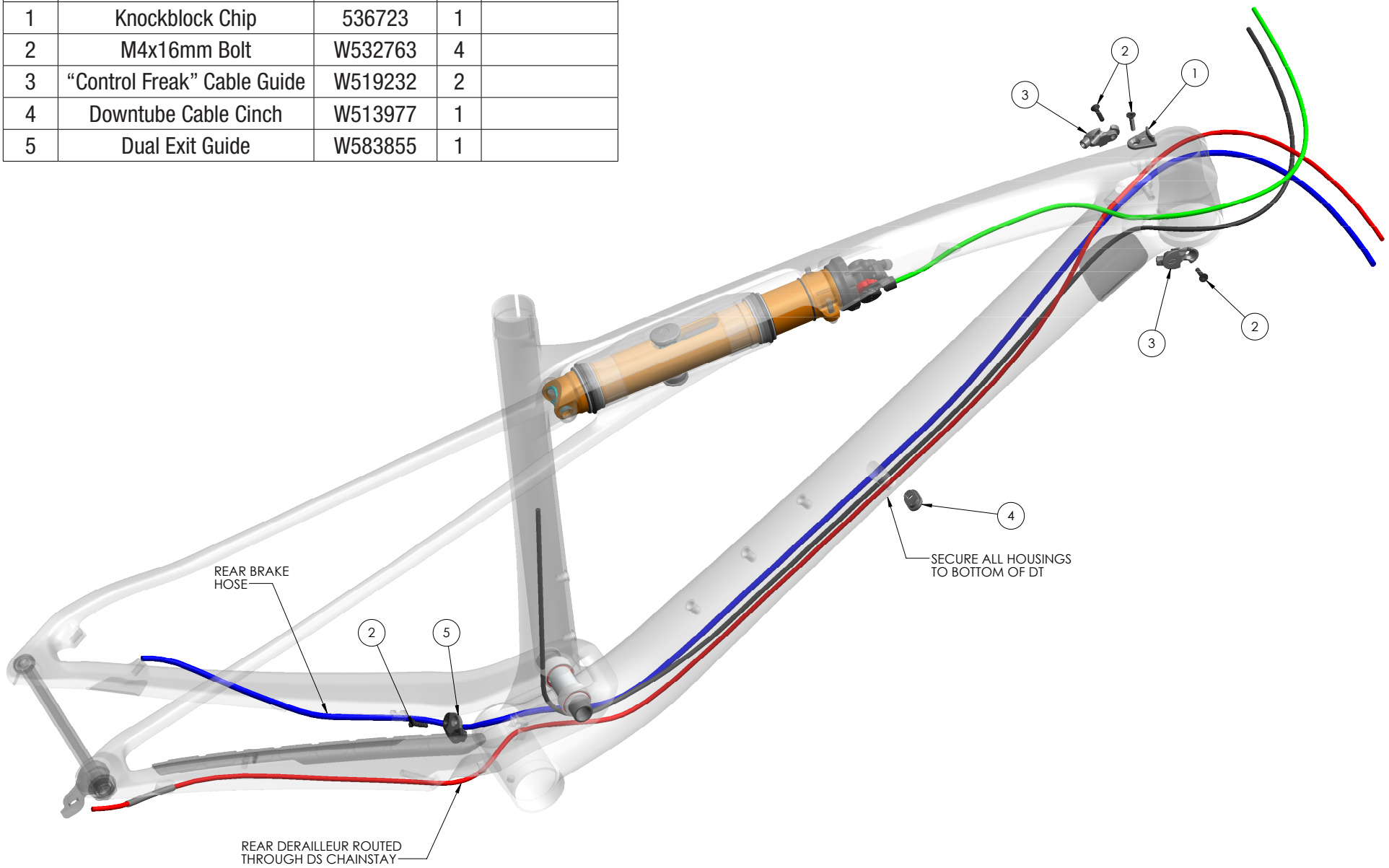

TREK

Product Support

MY20 Supercaliber Parts Quick Reference

Item	Description	Part Number	Qty	Note
6	Main Frame		1	
7	Swingarm		1	
8	Chainstay Guard	W582883	1	
9	Upper Downtube Guard	W582884	1	
10	Lower Downtube Guard	W582461	1	
11	Derailleur Hanger	W439634	1	
12	Derailleur Hanger Nut	W318004	1	Torque 23Nm
13	Thru Axle, Boost 148	W565792	1	Torque 10Nm 180.5mm Length M12x1.75x22mm Threading

The information in this chart is for MY22 & 23 bikes

Alternate Items	Description	Part Number	Qty	Notes
11	Universal derailleur hanger	W5271424	1	Torque 25 Nm
12				
13	Thru axle with switch lever	W600321	1	

Note: The image below shows parts for MYs 20 & 21 only.

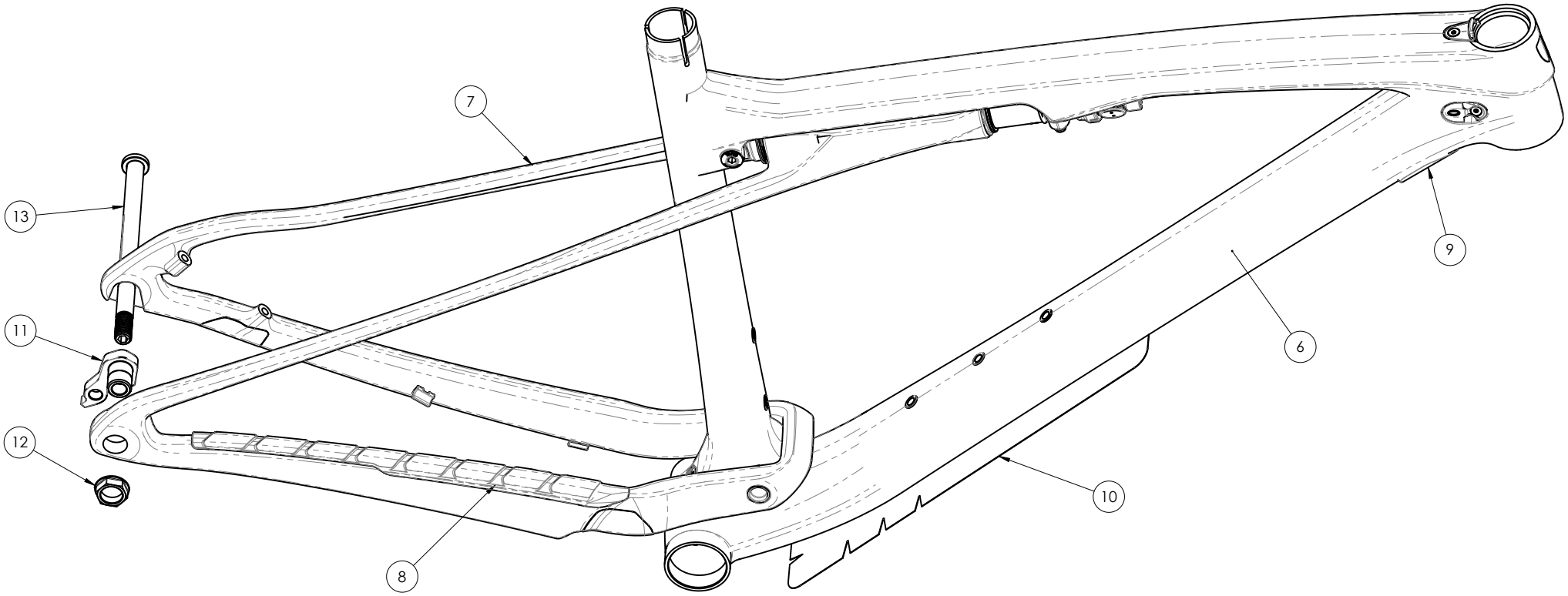

Product Support

MY20 Supercaliber Parts Quick Reference

Item	Description	Part Number	Qty	Note
14	Carriage Wiper Bushing	595247	2	
15	Carriage Wiper Seal	592550	2	
16	Foam Ring	592550	1	
17	Oil Retention Foam Block	592550	2	

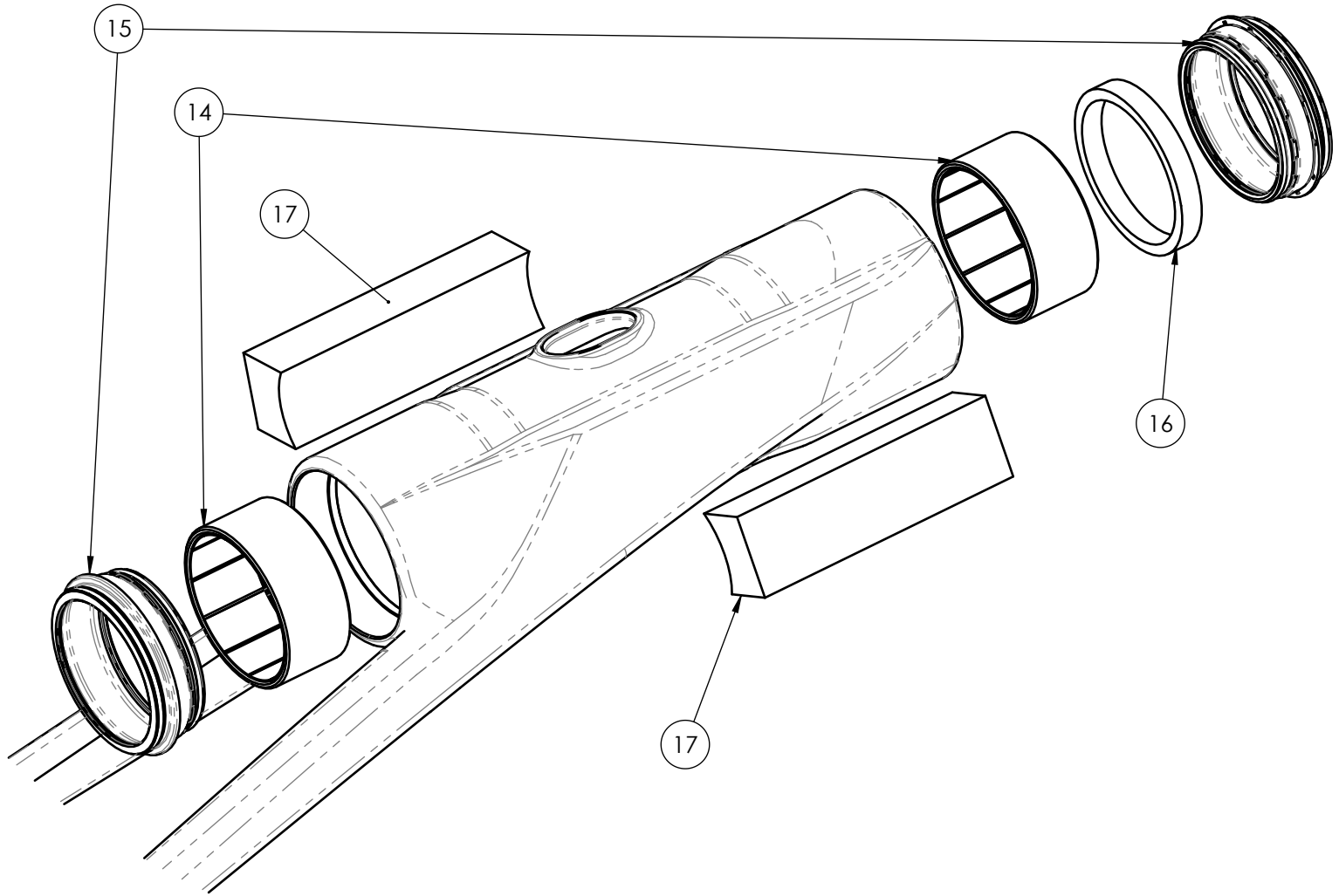

Product Support

MY20 Supercaliber Parts Quick Reference

Item	Description	Part Number	Qty	Note	Kit
18	Fox Shock, Performance, Black	W587198	1		
	Fox Shock, Factory, Kashima	W587197			
19	Damper Body Sleeve	591627	1		Kit 591627
20	Guide Bushing	591628	2		
21	Damper Body Mount Bolt	591627	1	Torque 7Nm	
22	Damper Body Captive Nut	591627	1		
23	O-Ring	591627	2		
24	IsoStrut Oil Plug	W580727	1		
25	IsoStrut Axle Sleeve	591626	1		

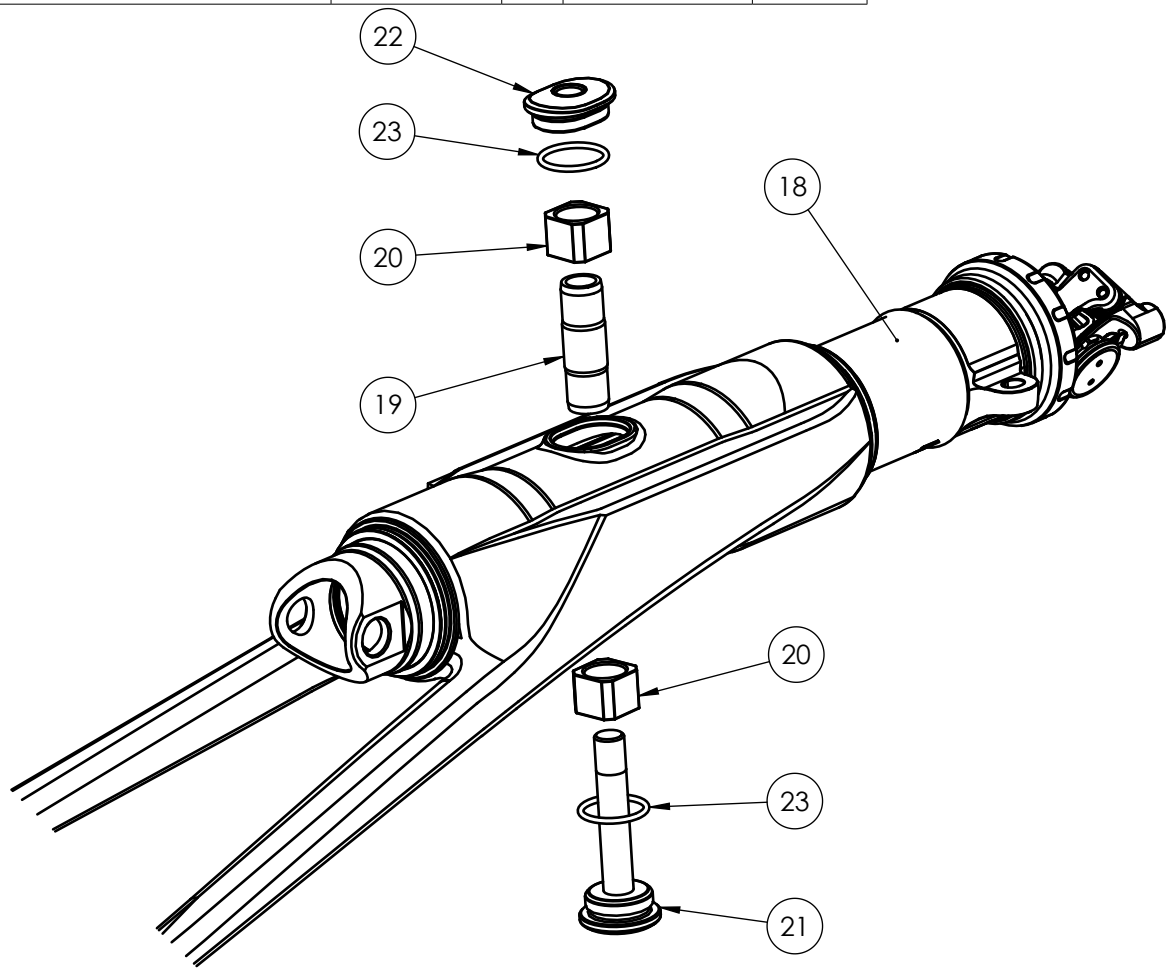

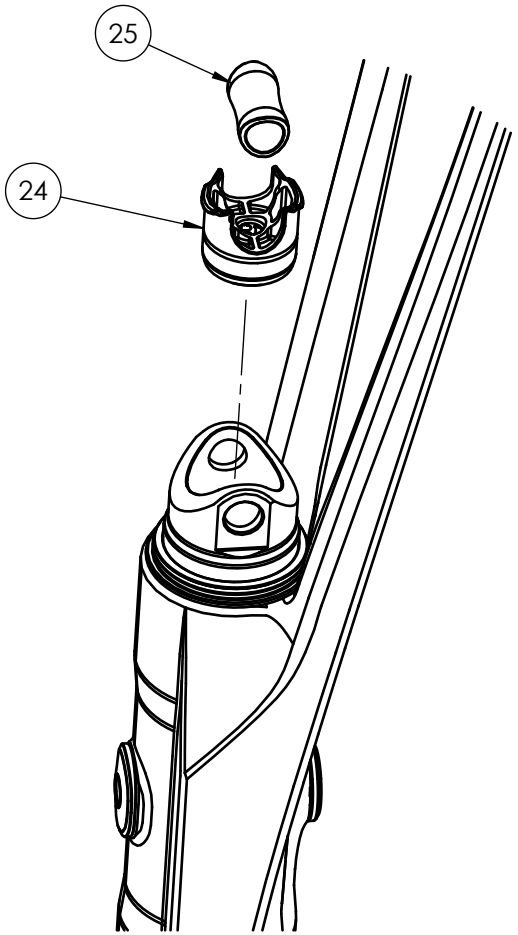

TREK

Product Support

MY20 Supercaliber Parts Quick Reference

Item	Description	Part Number	Qty	Note
26	Main Pivot Bearing	W302025	2	26x17x10mm
27	Main Pivot Sleeve	598051	1	
28	Main Pivot Washer	W440921	2	23x17x3mm
29	Main Pivot Axle	598051	1	Torque 23Nm
30	IsoStrut Axle	591626	1	Torque 10Nm
31	IsoStrut Axle Bolt	591626	1	
32	M5x18mm Bolt, T25 Torx	W584485	2	Torque 5Nm

