

2022 SPEED CONCEPT

SERVICE MANUAL SUPPLEMENT

Contents

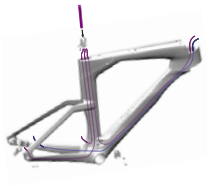
Brake/shift routing — Di2


Brake routing — eTap


T47 bottom bracket


Headset and basebar/ stem


Cockpit — towers

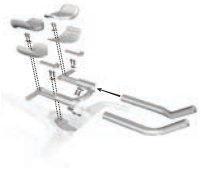
Cockpit — aerobars


Cockpit — install the towers and aerobars


Seatpost — SLR


Seatpost — TT


IsoSpeed — SLR


Chainkeeper

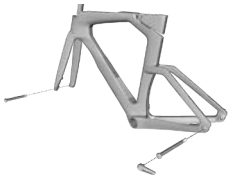
Axles — Thru Skewers

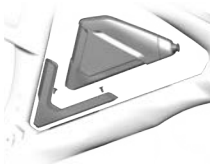
Accessories — SLR


Accessories — SLR (continued)

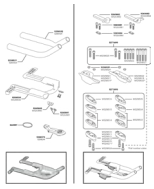
Not installed parts boxes

Safety

WARNING

Properly tighten hardware

Always tighten hardware to the specified torque. Over-tightening hardware could deform or break the hardware or components. Under-tightening hardware could cause hardware or components to become loose. Either situation could damage the bicycle and result in injury to the rider.

WARNING

Reapply threadlocker

All reused-fasteners with pre-applied threadlocker must be cleaned with isopropyl alcohol and have new thread-locker applied before re-assembly. If threadlocker is not applied, the fasteners may loosen which could damage the bicycle and result in injury to the rider.

Legend


Apply grease


Do not apply grease


Apply threadlocker

Nm Torque

★ Zip tie

Copyright 2022 Trek Bicycle Corporation All Rights Reserved

About this manual

Rider must be measured before assembling this bicycle

This bicycle features a custom fit and parts specific to the rider's proportions. Before purchasing this bicycle, you must have been fit using the online Speed Concept Fit Finder.

Order of assembly

This manual follows an order of assembly starting with a bare frame (e.g., you route the rear brake hose before installing the bottom bracket). Certain build portions may have been completed already — skip to the section you need.

Scope of this manual

This manual does not contain detailed instructions for components not produced by Trek, such as shift levers and brake calipers. Refer to the original manufacturer for more information.

Experienced bicycle mechanics required

These instructions are written for an experienced bicycle mechanic. The high-tech design of this bicycle requires precision and the proper tools. If you are doing your own maintenance, consult your dealer for any issues.



SLR



TT

Brake/shift routing — Di2

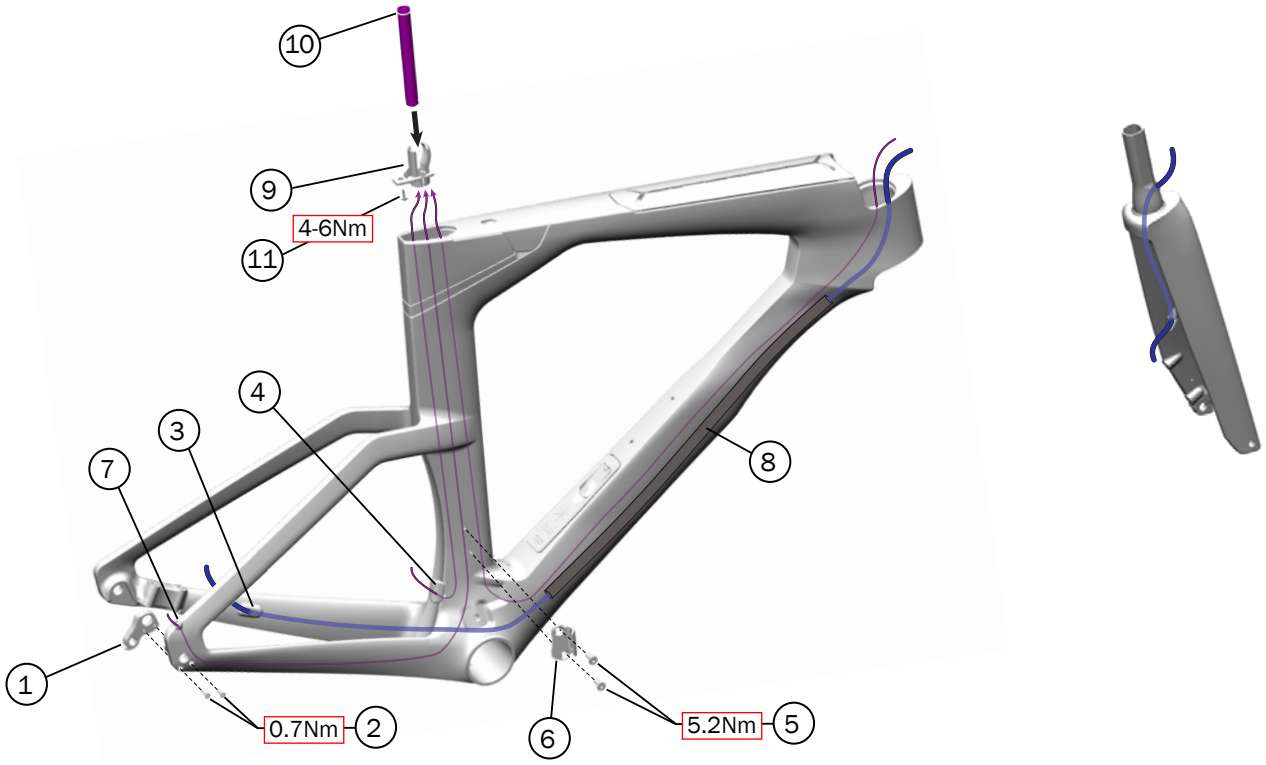

1. Rear derailleur hanger — *W524188*
2. Rear derailleur hanger bolts — *W524884*
3. Rear brake grommet — *W330578*
4. Front shift wire grommet — *W326042*
5. Front derailleur bolts — *W5263897*
6. Front derailleur hanger — *W5257283*
7. Rear Di2 shift wire grommet — *W317292*
8. Foam housing sleeve (60cm) — *W528082*
9. Battery mount — *W5255420*
10. Battery o-ring
11. Battery mounting screw

5294345

Route the brake hoses

1. Connect the calipers to the brake hoses.
2. Route the rear brake hose through the grommet (3) and foam sleeve (8). Route both brake hoses as shown below.

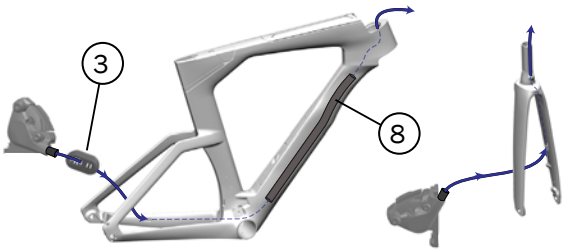

3. Loosely attach the calipers to the chainstay and fork (this keeps the hoses from sliding out).

Brake/shift routing — Di2 (continued)

Route the shift wires

1. Route and connect the three wires to the battery as shown below.

   TIP: Tape the wire sticking out of the head tube to the outside of the frame.

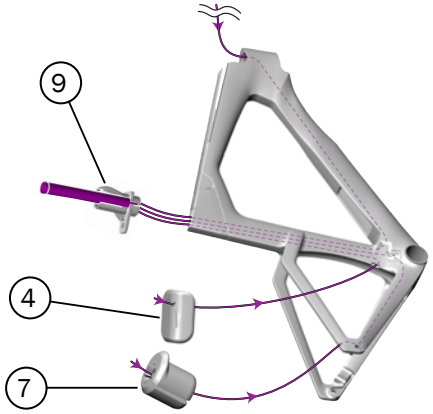

2. Insert the battery mount assembly into the seatpost and install the mounting screw (11).

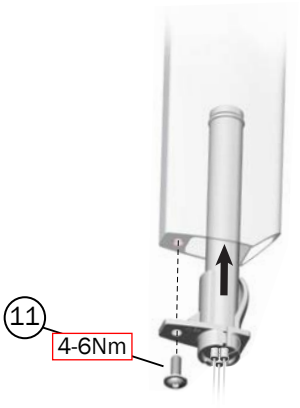

3. Insert the seatpost into the seatmast.
4. Attach the derailleurs to the frame. Connect the shift wires to the derailleurs.

Di2 wiring overview

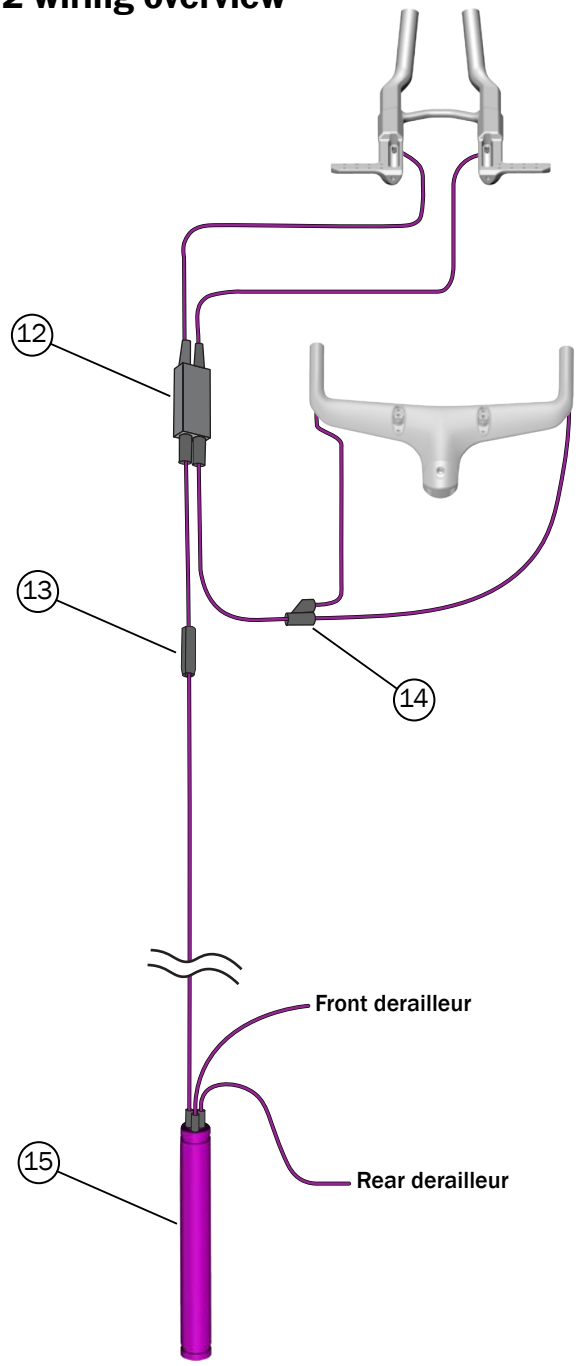

12 Junction B — *SM-JC41*

13 Conversion adaptor — *EW-AD305*

14 Y-split — *EW-JC130*

15 Battery — *BTDN300*

Brake routing — eTap

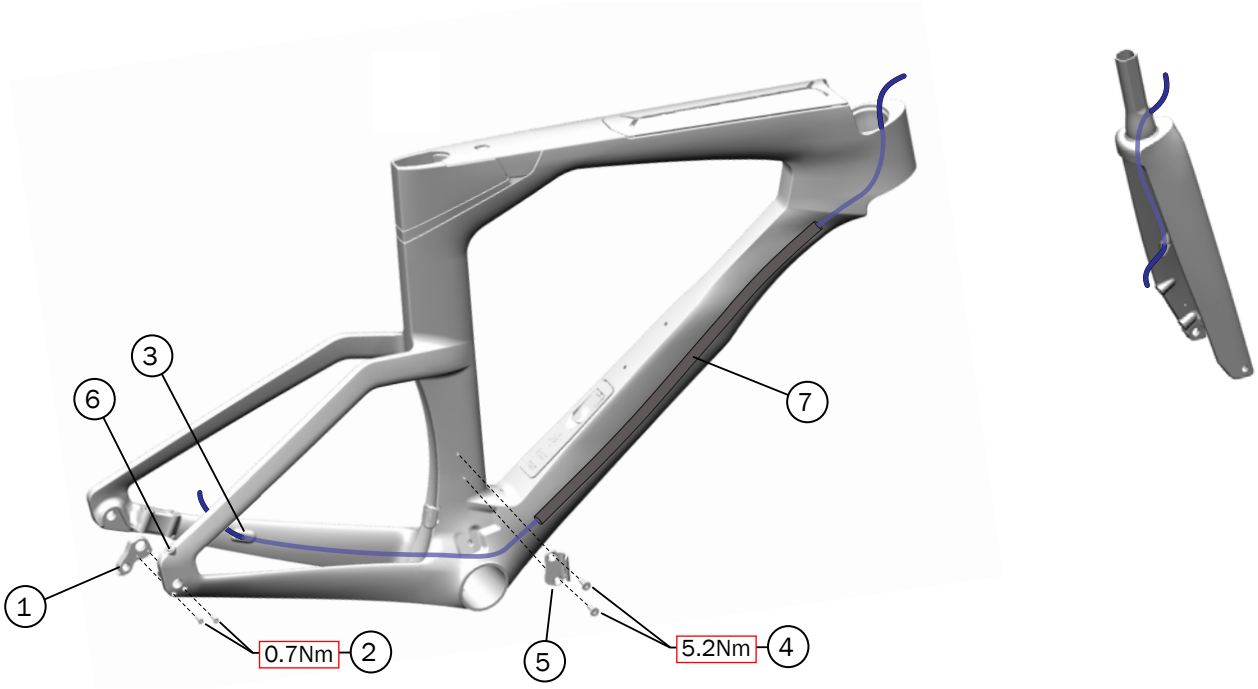

1. Rear derailleur hanger — *W524188*
2. Rear derailleur hanger bolts — *W524884*
3. Rear brake grommet — *W330578*
4. Front derailleur bolts — *W5263897*
5. Front derailleur hanger — *W5257283*
6. Rear grommet plug — *W547906*
7. Foam housing sleeve (60cm) — *W528082*

Route the brake hoses

1. Connect the calipers to the brake hoses.
2. Route the rear brake hose through the grommet (3) and foam sleeve (7). Route both brake hoses as shown below.

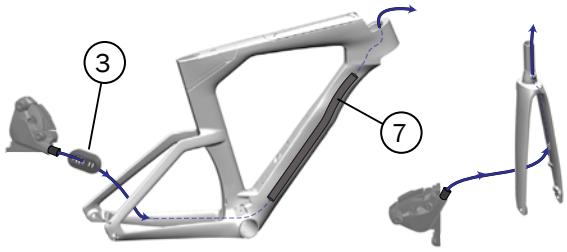

3. Loosely attach the calipers to the chainstay and fork (this keeps the hoses from sliding out).

T47 bottom bracket

Install the bottom bracket

1. Apply grease to the threads on both sides of the frame.

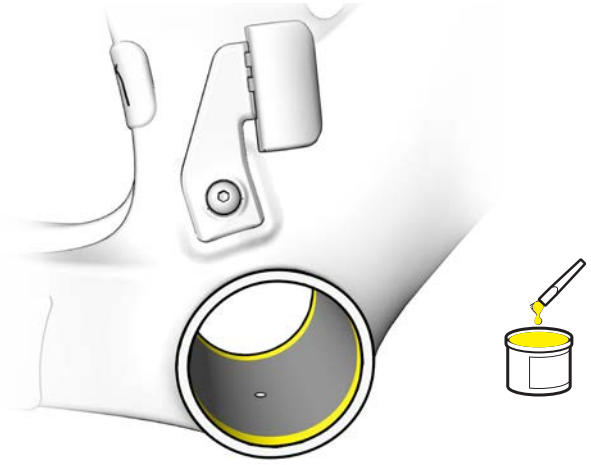

2. Using your hands, thread the bottom bracket onto the frame.

   NOTICE: Do not start tightening the bottom bracket with a tool. Dirt and other contaminants can damage the threading.

3. Use the proper tool to torque both sides to specification (see the Tool and spline compatibility table below).
4. If necessary, add spacers before installing the cranks (see the Spacers required table at the top right).

Spacers required

The table below contains bottom bracket/crank combinations that require spacers. Your bicycle may have other combinations that do not require spacers.

Crank		Bottom bracket	Spacers required	
			Drive side	Non-drive side
Shimano		CeramicSpeed 24mm	0.5mm	0.5mm
SRAM	DUB	SRAM DUB	2-3mm	—
	GXP	Wheels MFG	1.0mm	—

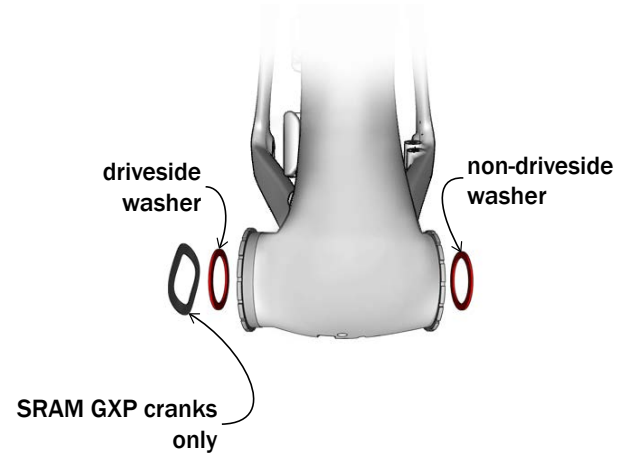

Tool and spline compatibility

	Tool		Praxis		Unior	Park Tool	Wheels Mfg	CeramicSpeed
	Model *Part number*		TP-2400 *594148*	TP-3028 *594147*	1671.T47 *1043614*	BBT-47 *568922*	BBTOOL-48-44 *589307*	—
Bottom bracket manufacturer	Praxis	24mm	X		X			
		30mm		X	X			
	Wheels MFG						X	
	SRAM DUB				X	X		
	Chris King				X	X		
	Ceramic-Speed	24mm			X	X		X
		GXP						X

Headset and basebar/stem

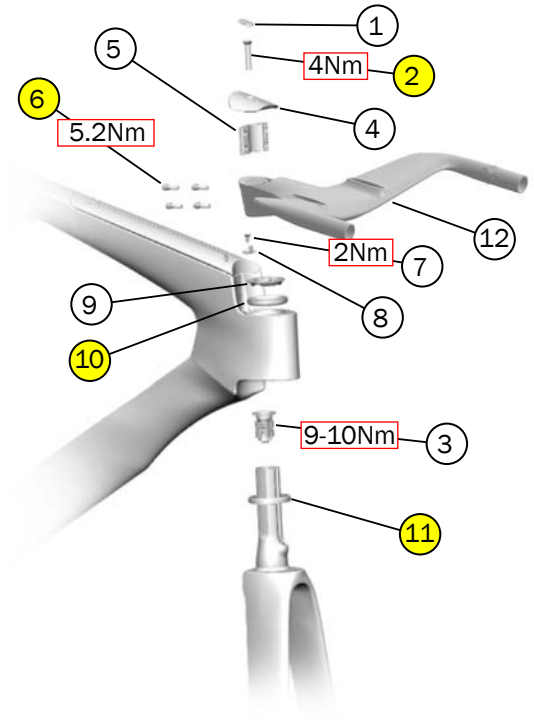

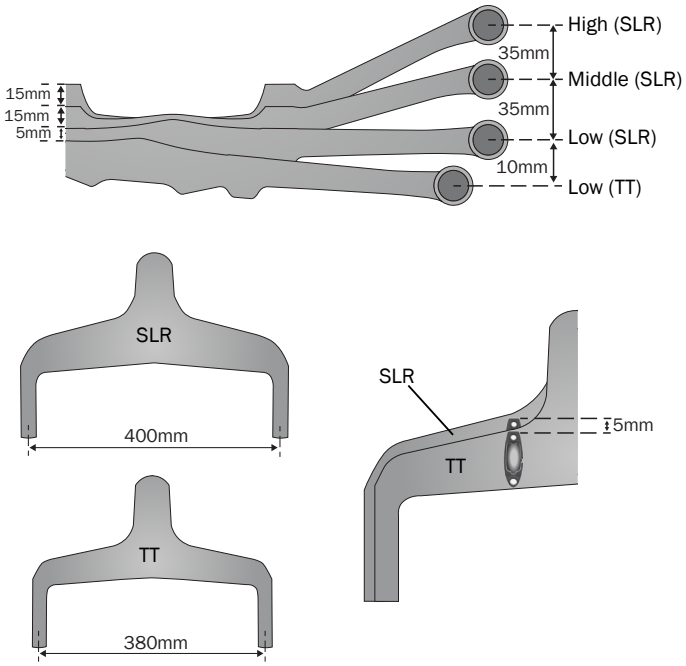

1. Bar cap plug — *W5258507*
2. Top cap bolt
3. Compression plug — *W5257464*
4. Top cap — *W5258506*
5. Faceplate — *W5258528*
6. Stem bolts (M5x18mm) — *W582092*
7. Steer stop bolt (M4x9mm) — *W546731*
8. Steer stop — *W5259927*
9. Split ring — *W563834*
10. Upper headset bearing — *W513538*
11. Lower headset bearing — *W540243*
12. Basebar/stem
    - Low (SLR) — *W5308426*
    - Middle (SLR) — *W5308427*
    - High (SLR) — *W5308428*
    - Low (TT) — *W5308429*

Basebar/stem maximum cut length

Do not cut the bars closer than 47mm to the slotted holes.

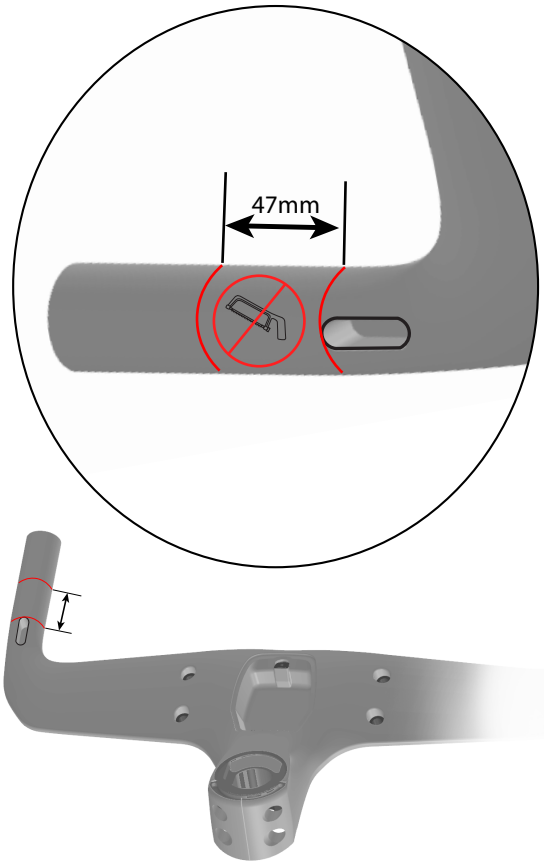

Headset and basebar/stem (continued)

Cut the steerer tube (new forks only)

If installing a new fork, cut the steerer tube following the table below. Measure from the top of the fork crown base.

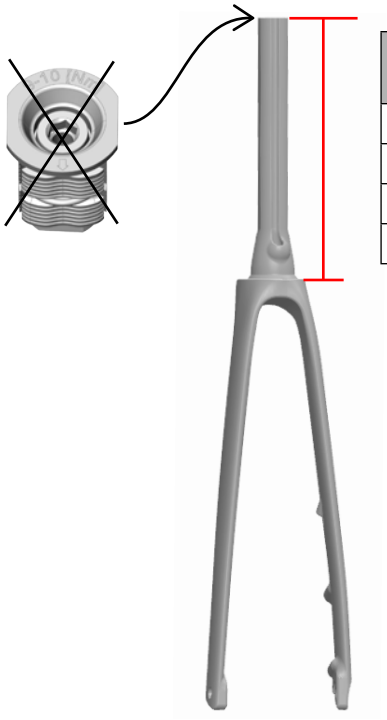

Frame size	Cut length
S	96mm
M	121mm
L	146mm
XL	171mm

NOTE: The steerer tube must be flush or below (0-6mm) the top of the basebar/stem after fully installed. This measurement does not include the compression plug.

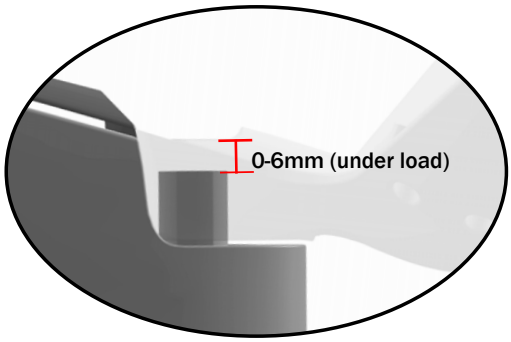

Verify the steerer tube length under load

1. Install the compression plug.

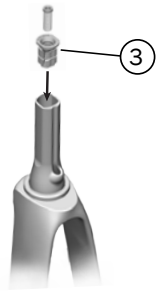

2. Assemble the parts as shown below.

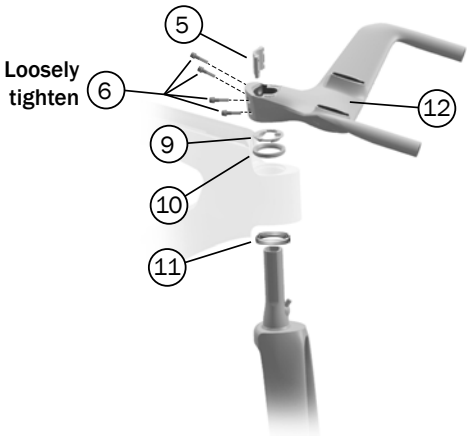

3. Install the top cap (4) and top cap bolt (2).

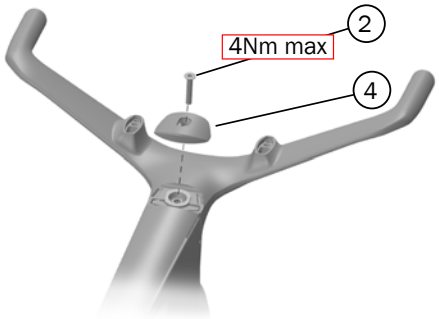

4. Tighten the non-driveside stem bolts (6). Then, tighten the driveside stem bolts (6).



5. Remove the top cap (4), top cap bolt (2), and compression plug (3).

   TIP: Turn the bike upside down or use a pick to remove the compression plug.

6. Verify the steerer tube is flush or below (0-6mm) the basebar/stem. Measure and cut again, if necessary.

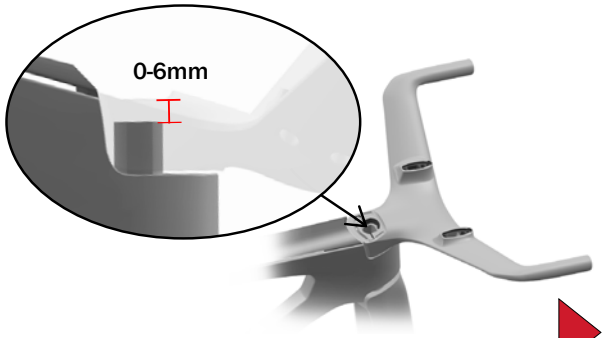

Headset and basebar/stem (continued)

Install the headset and basebar/stem

1. Clean the steerer tube using 50/50 isopropyl alcohol/water mix.
2. Install the steer stop.

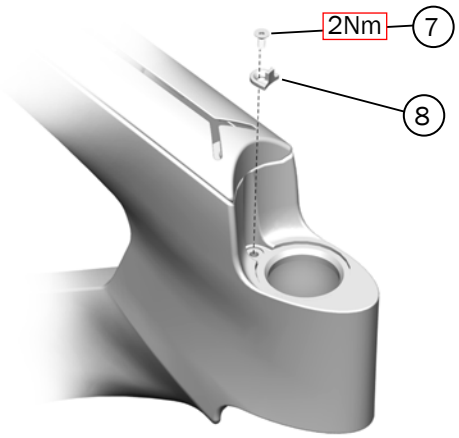

3. Install the compression plug with the arrow facing forward.

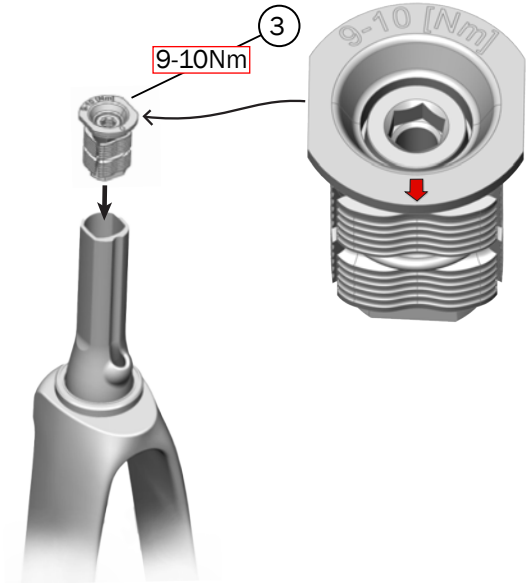

4. Grease both bearings (10, 11), the fork crown race, and both head tube bearing bores (upper and lower).

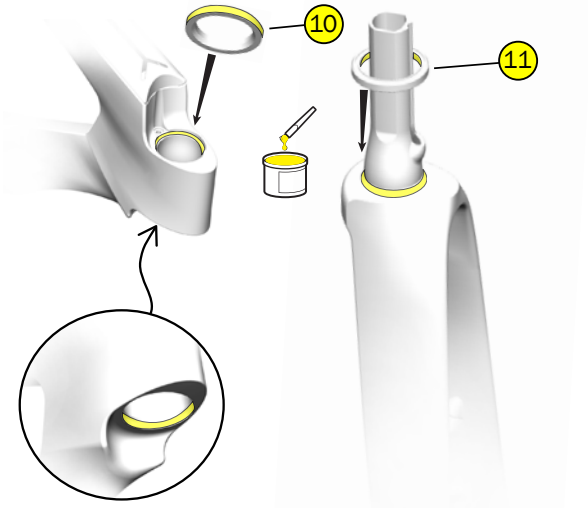

5. Insert the fork into the head tube. Route the split ring (9) down the brake hoses and wire (if Di2).

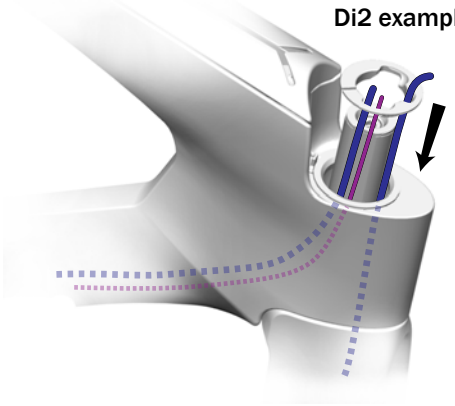

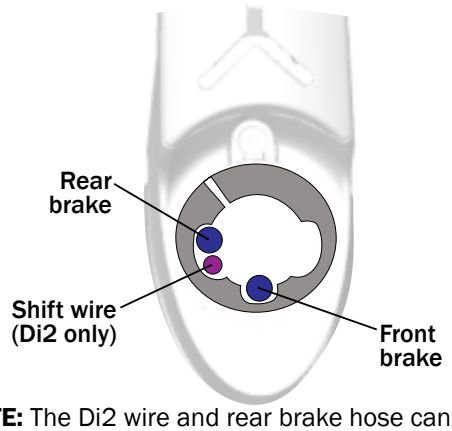

NOTE: The Di2 wire and rear brake hose can also be routed through the non-drive side of the split ring (9).

Headset and basebar/stem (continued)

Install the headset and basebar/stem

6. Attach the faceplate (4) to the basebar/stem. Loosely tighten the stem bolts.

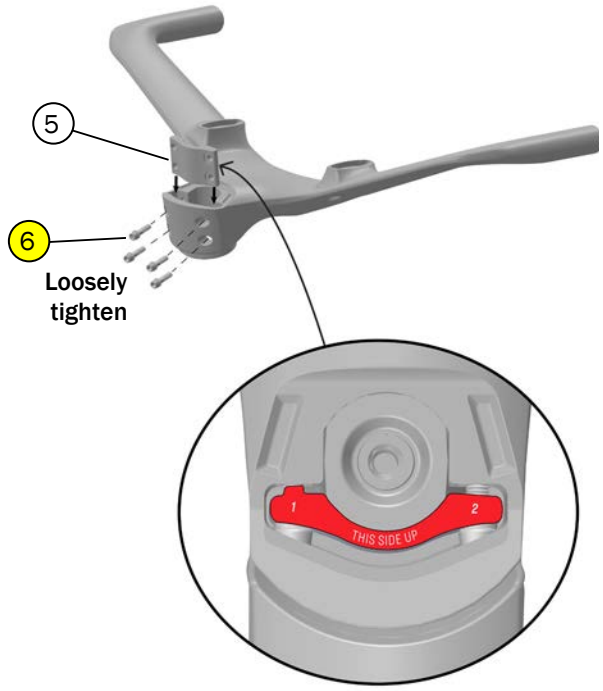

7. Slide the basebar/stem onto the steerer tube. Route both hoses as shown below.

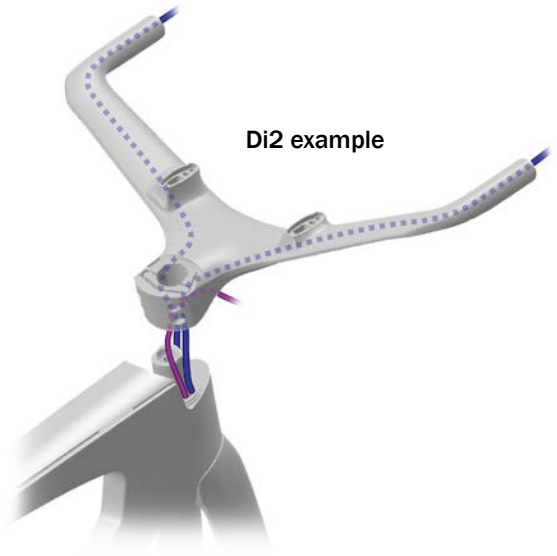

8. Tighten the non-driveside stem bolts until the faceplate has a close fit with the steerer tube.

NOTICE: Do not fully torque these bolts — this will prevent the top cap from obtaining the proper preload.

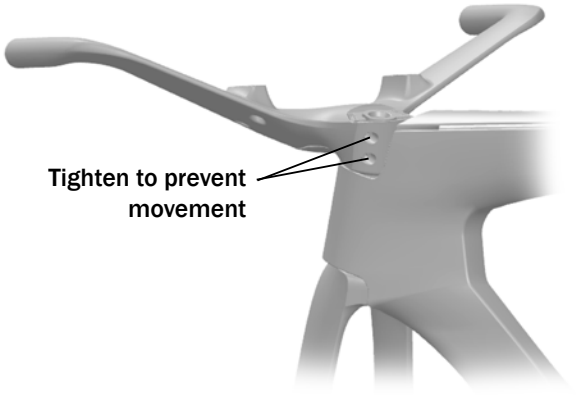

9. Install the top cap (4) and top cap bolt (2) — tighten until play is removed. Install the bar cap plug (1).

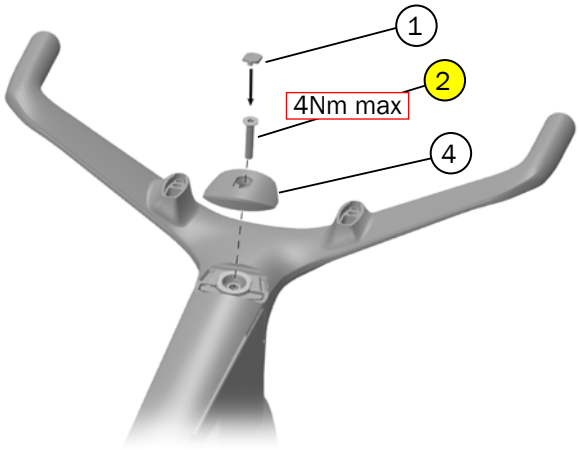

10. Tighten the non-driveside stem bolts to 5.2Nm. Tighten the driveside stem bolts to 5.2Nm.



Cockpit — towers

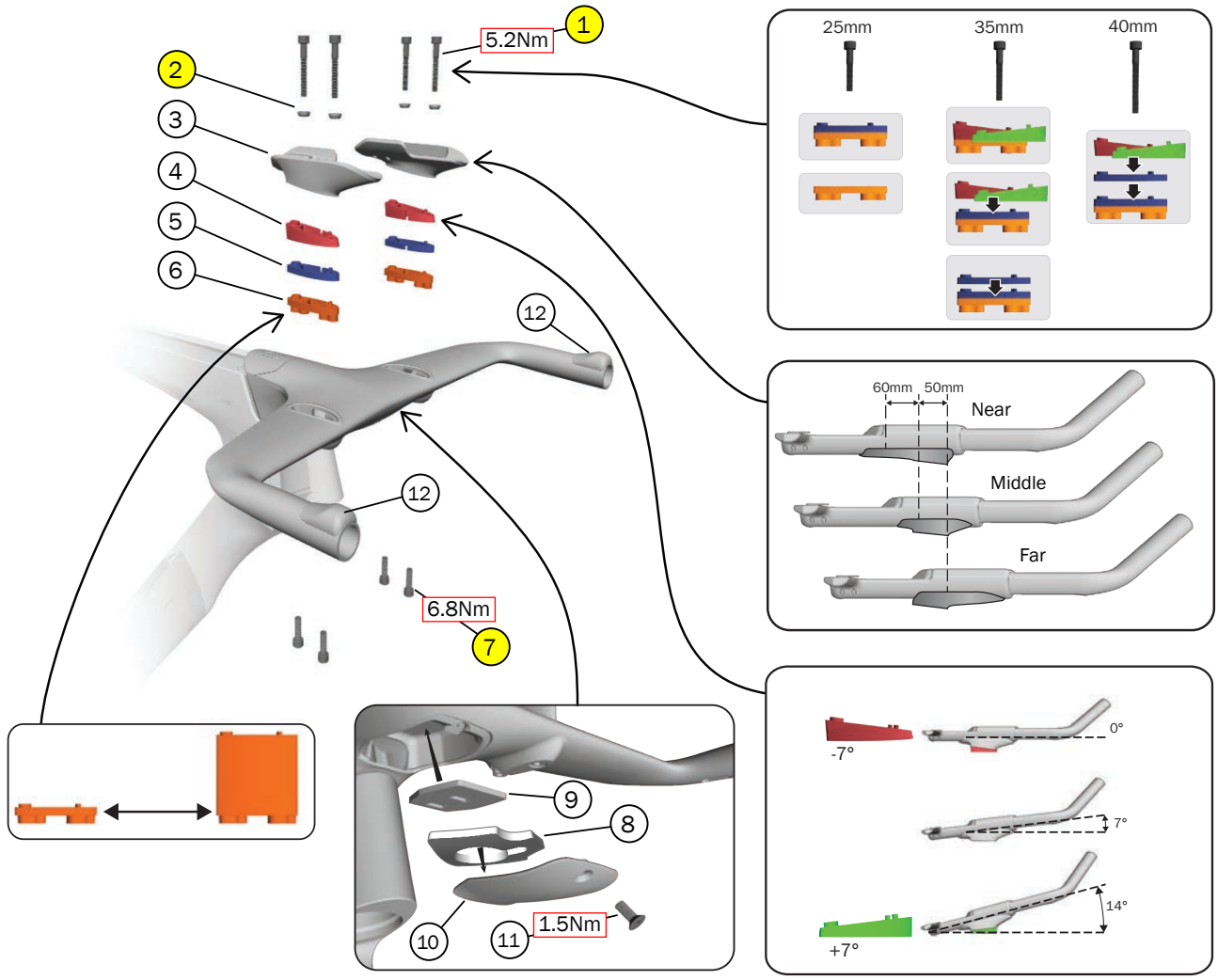

1 Tower bolts
- 25mm — *W5258525*
- 35mm — *W5258526*
- 40mm — *W5258527*

2 Bolt washers — *W5258529*

3 Tower toppers
- Near (driveside) — *W5258521*
- Near (non-driveside) — *W5258522*
- Middle (driveside) — *W5258517*
- Middle (non-driveside) — *W5258518*
- Far (driveside) — *W5258519*
- Far (non-driveside) — *W5258520*

4 Angled spacers
- -7° (driveside) — *W5258516*
- -7° (non-driveside) — *W5258535*
- +7° (driveside) — *W5258515*
- +7° (non-driveside) — *W5258534*

5 5mm fit spacers
- Driveside — *W5258514*
- Non-driveside — *W5258533*

6 Tower bases
- 0mm — *W5258510*
- 15mm — *W5258511*
- 30mm — *W5258512*
- 45mm — *W5258513*
- 60mm — *W5260270*
- 75mm — *W5260271*

7 Under tower bolt (M6x20mm) — *W5258524*

8 Junction cover foam — *W5258508*

9 Basebar/stem foam — *W5258509*

10 Junction cover — *W5257630*

11 Junction cover bolt (M4x10mm) — *W5258523*

12 Grips — *439510*

Cockpit — aerobars

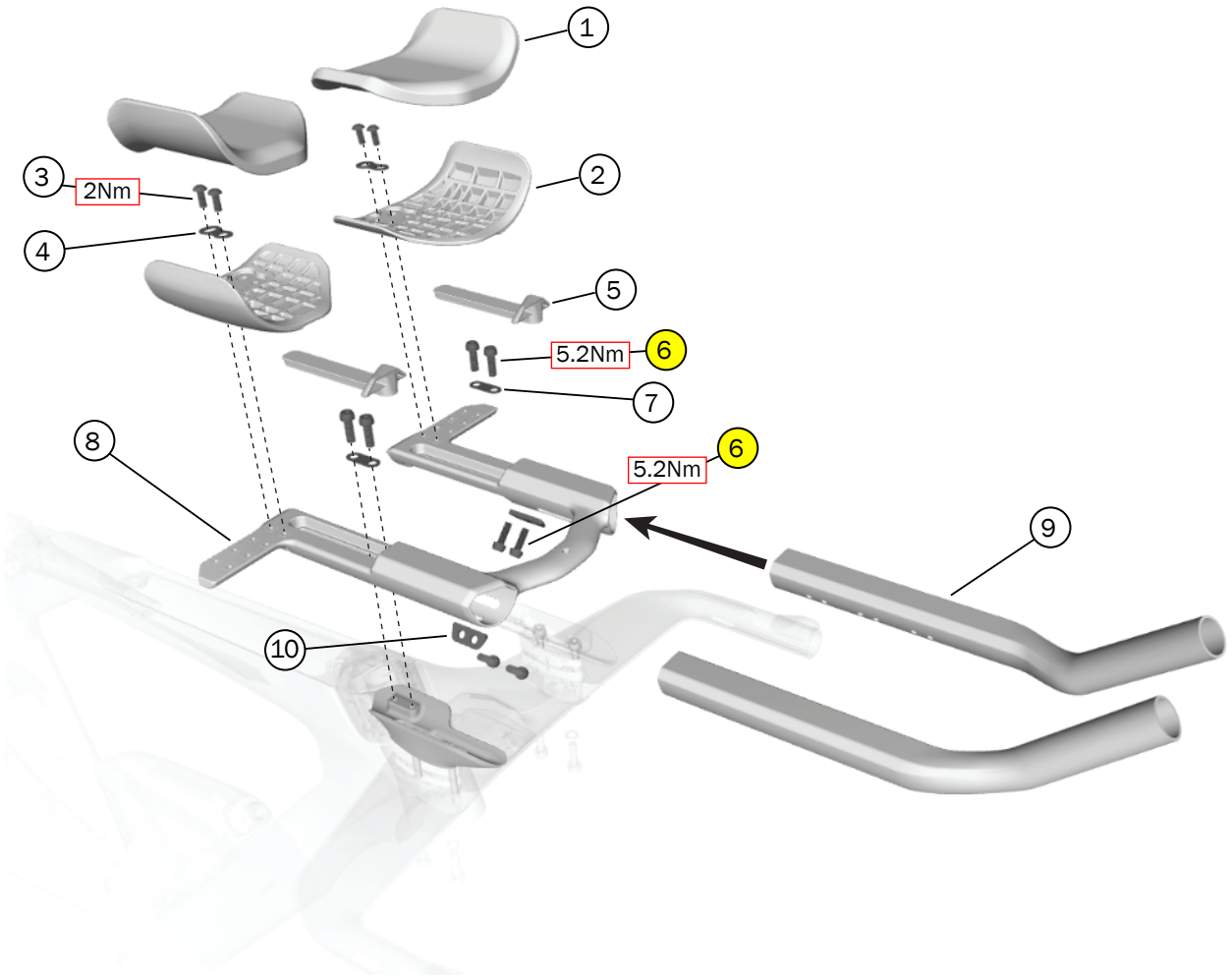

1. Arm pads
2. Arm pad holders
3. Arm pad bolts — *W330683*
4. Arm pad washers

W5263384

5. Bolt covers
   - Driveside — *W5263882*
   - Non-driveside — *W5263883*
6. Extension bolts — *W5263881*
7. Dogbone washer — W5263884
8. Extension base — *W5258530*
9. Extension bars — *5285924*
10. Aerobar slide washers — *W5263885*

Cockpit — install the towers and aerobars

1. Assemble the towers. Insert and torque the tower topper bolts to 5.2Nm.

   NOTE: Your setup may have different parts depending on spacers and tower bases used.

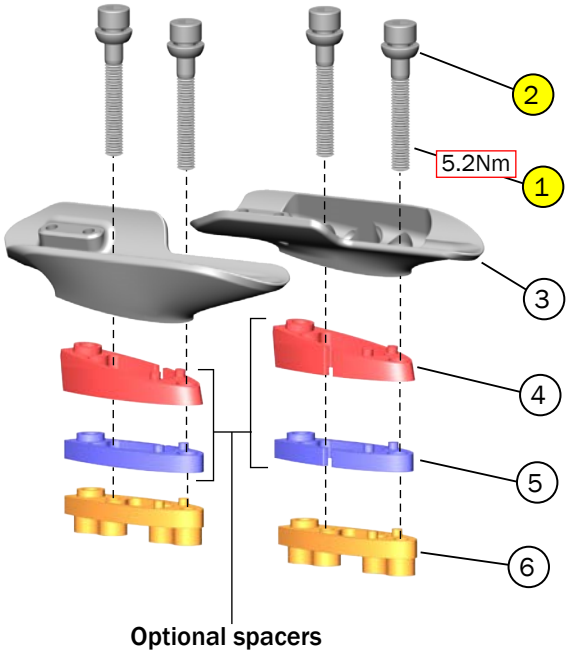

2. Connect the extension bars to the extension base.

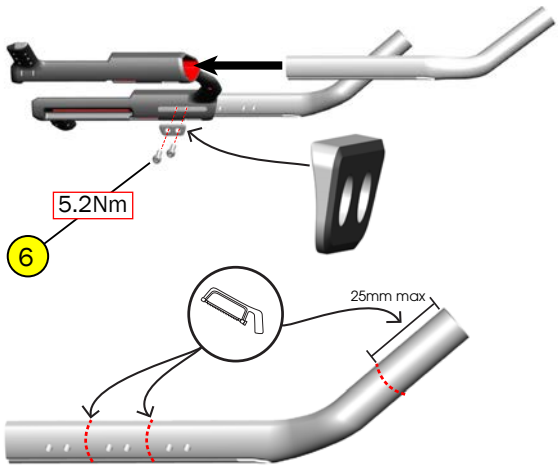

OPTIONAL: To shorten the extension bars, you can cut them at the dotted lines shown above. Before cutting, insert the extension bars into the extension base to test the fit.

3. Route the shift wires through the aerobar assembly.

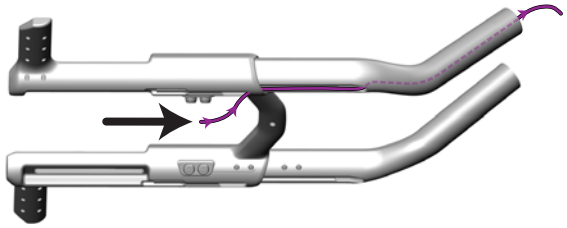

4. Attach the aerobar assembly to the towers. Do not fully torque the bolts.

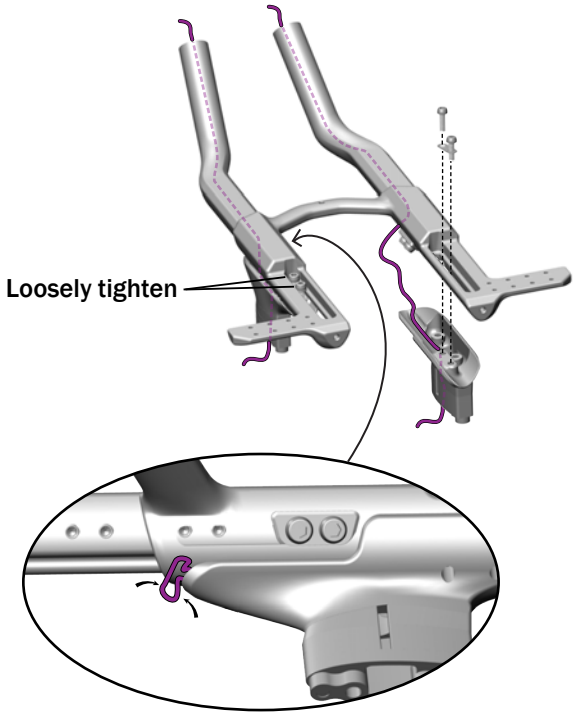

NOTICE: Do not pinch the wires. Make sure all wires are tucked inside the towers and aerobars.

Cockpit — install the towers and aerobars (continued)

5. Route the wires out the junction box cavity and seat the aerobar assembly on the basebar/stem. Loosely tighten the bolts.

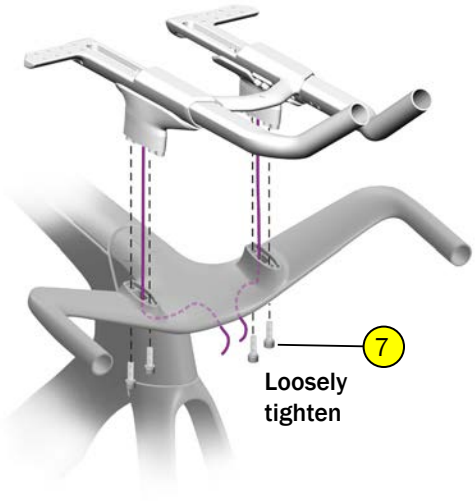

6. Tighten both bolts on the same side — tightening one bolt a few turns and then the other — until they are both torqued to 6.8Nm. Repeat for the other side and verify all bolts are fully torqued.

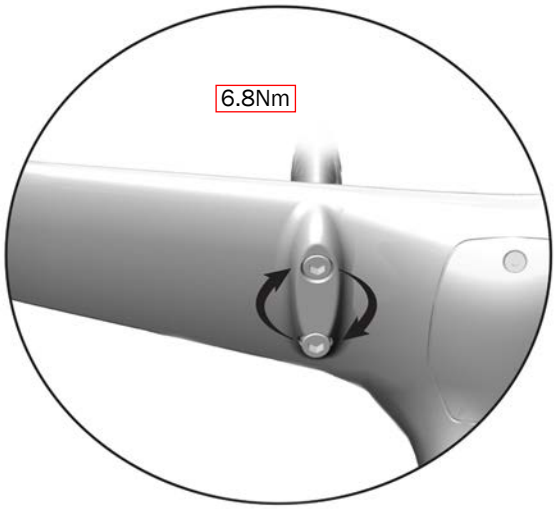

7. Attach the arm pad holders (2) and arm pads (1).

OPTIONAL: For further adjustment, you can move the arm pad holders outward using one of the four mounting hole sets. You can also rotate the horizontal angle of the arm pads up to 10° using the dogbone washers (7).

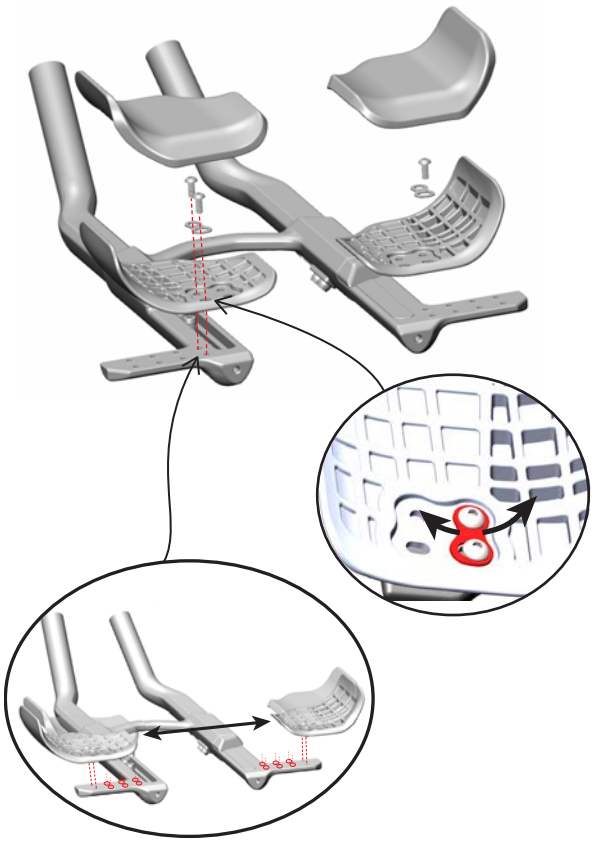

Cockpit — install the towers and aerobars (continued)

8. Adjust the extension bars — to the rider's fit — forward or backward.

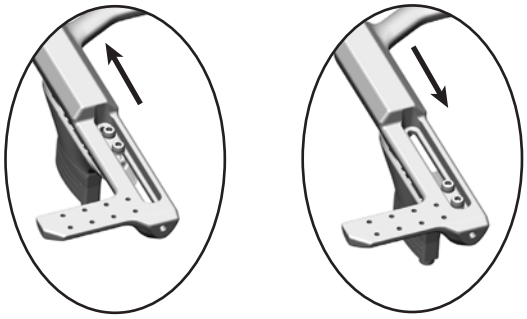

9. Tighten both bolts on the same side — tightening one bolt a few turns and then the other — until they are both torqued to 5.2Nm. Repeat for the other side and verify all bolts are fully torqued.

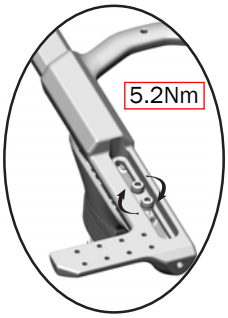

10. Attach the bolt covers.

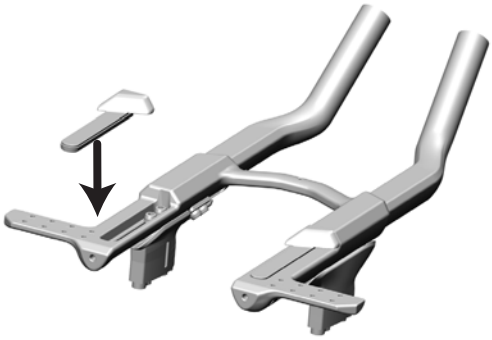

11. Connect the wires to the junction(s) as shown below. Insert them into the basebar/stem and attach the junction cover.

NOTE: Di2 has two foam pieces (9) taped to the basebar/stem and eTap has only one (more detail is shown in the diagram on page 11).

eTap

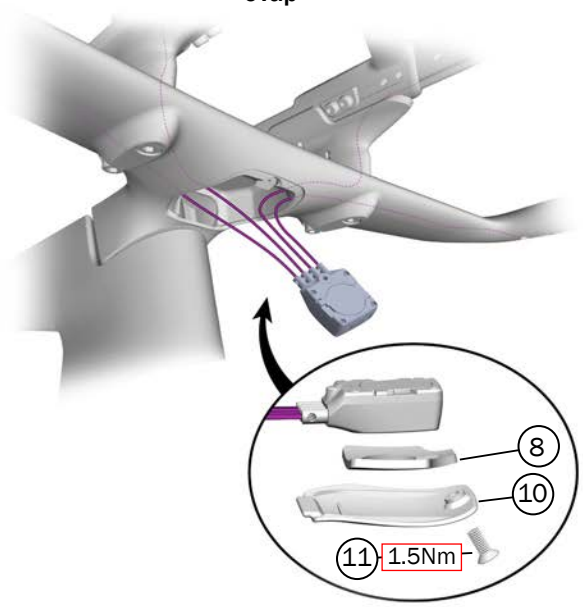

Di2

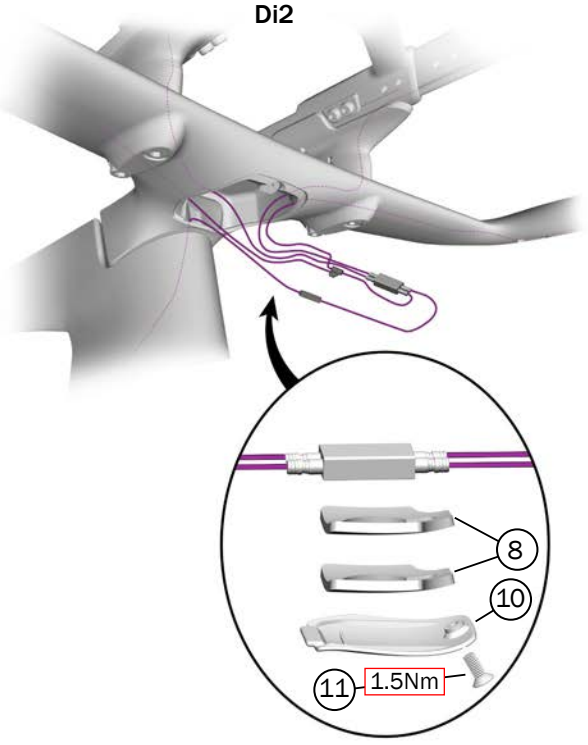

Seatpost — SLR

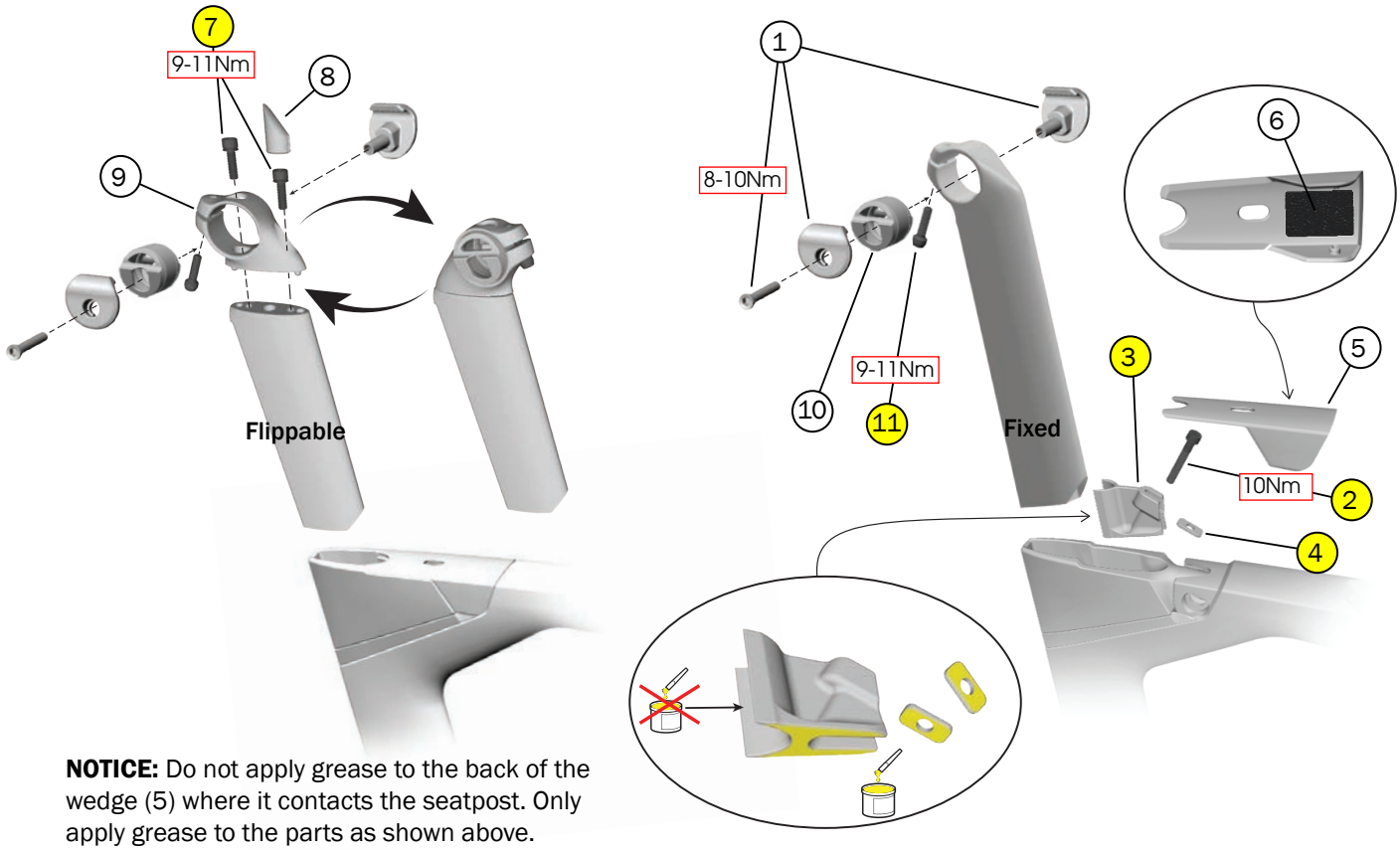

NOTICE: Do not apply grease to the back of the wedge (5) where it contacts the seatpost. Only apply grease to the parts as shown above.

- (1) Saddle ears and bolt
  - 7x7mm — *W524900*
  - 7x9mm — *W5256105*
  - 7x10mm — *W524901*
- (2) Bolt (M6x40mm)
- (3) Wedge
- (4) Wedge washer

  — *5294346*
- (5) IsoSpeed cover — *5302889*
- (6) Foam piece — *W5303840*

Seatpost (flippable)
Short — *W5266951*
Long — *W5266952*

- (7) Bolts (M6x20mm) — *W5277565*
- (8) Rubber plug — *W5277955*
- (9) Head — *W5277566*
- (10) Barrel
- (11) Titanium bolt (M6x20mm)

— *W5280097*

Seatpost (fixed)
Short — *W5268027*
Long — *W5268028*

- (10) Barrel
- (11) Titanium bolt (M6x20mm)

— *W5280097*

Seatpost — TT

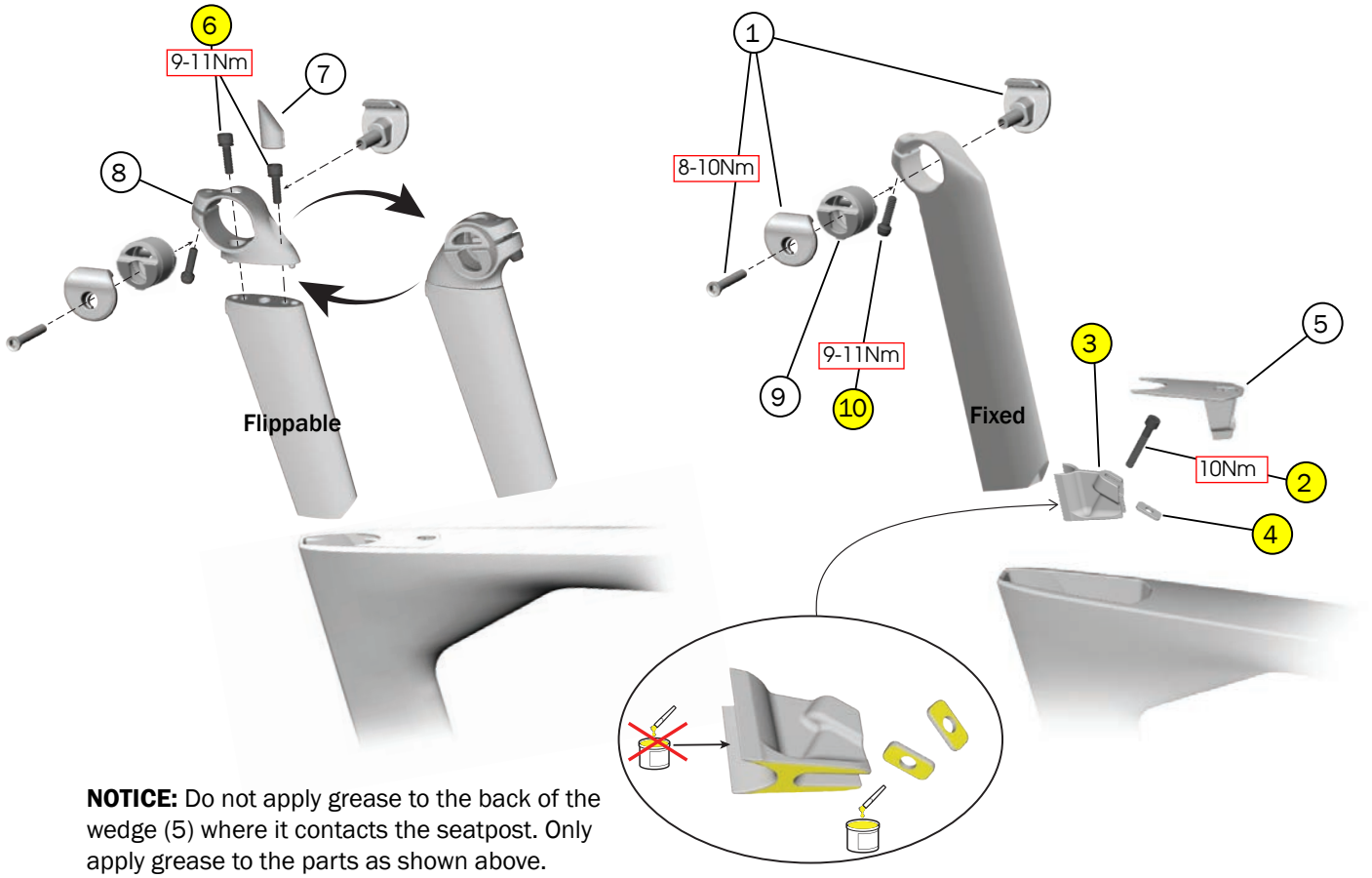

NOTICE: Do not apply grease to the back of the wedge (5) where it contacts the seatpost. Only apply grease to the parts as shown above.

- (1) Saddle ears and bolt
  - 7x7mm — *W524900*
  - 7x9mm — *W5256105*
  - 7x10mm — *W524901*
- (2) Bolt (M6x40mm)
- (3) Wedge
- (4) Wedge washer

  — *5294346*
- (5) Wedge cover — *5303030*
- **Seatpost (flippable)**
  Short — *W5266951*
  Long — *W5266952*
  - (6) Bolts (M6x20mm) — *W5277565*
  - (7) Rubber plug — *W5277955*
  - (8) Head — *W5277566*
  - (9) Barrel
  - (10) Titanium bolt (M6x20mm)

  — *W5280097*
- **Seatpost (fixed)**
  Short — *W5268027*
  Long — *W5268028*
  - (9) Barrel
  - (10) Titanium bolt (M6x20mm)

  — *W5280097*

IsoSpeed — SLR

NOTICE: Only authorized dealers should perform maintenance on the IsoSpeed. Improper handling, tools used, or torque applied to these parts may result in damage to the IsoSpeed parts or cause seatpost movement.

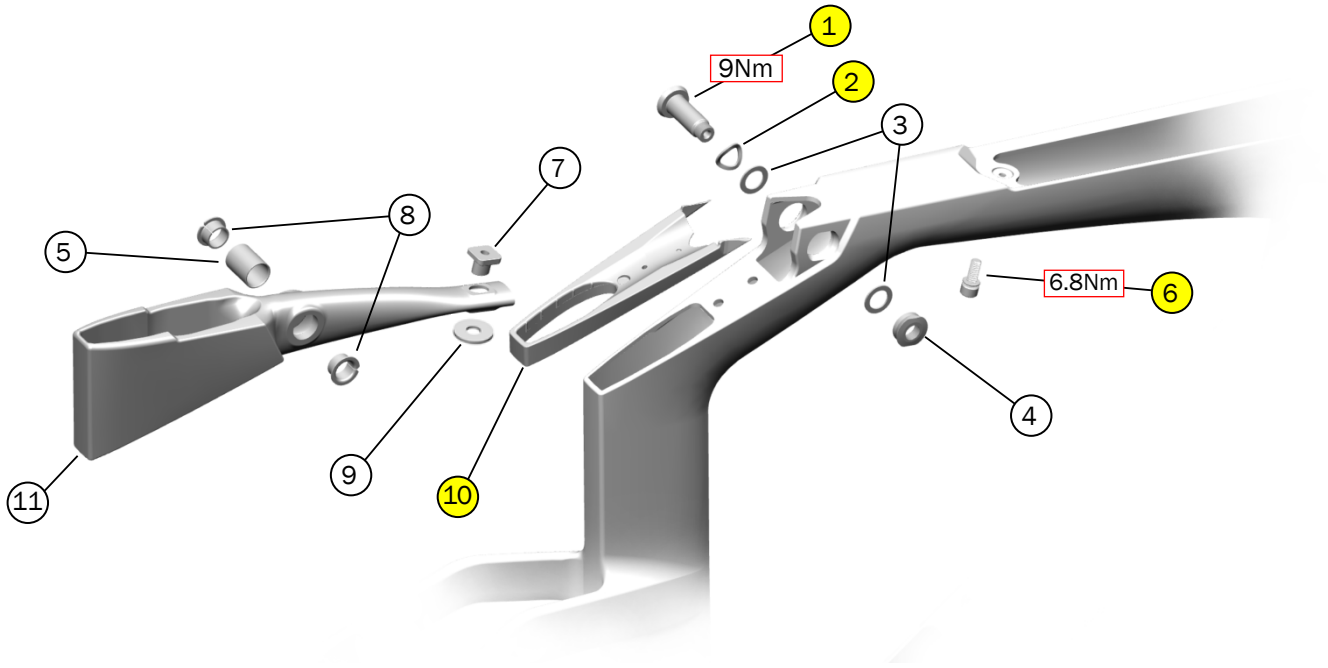

- 1 Pivot bolt
- 2 Wave washer
- 3 Flat washers
- 4 Pivot nut
- 5 Pivot sleeve

5288664

- 6 Tongue bolt — *W5268219*
- 7 Tongue T-nut — *W5260276*
- 8 Flanged bushings — *W5256074*
- 9 Tongue washer — *W5260277*
- 10 Seatmast grommet — *W5260165*
- 11 Tongue — *W5305622*

Servicing the IsoSpeed

Contaminants can build up between IsoSpeed components causing movement and noise. To service the IsoSpeed, follow the steps below:

1. Remove all parts shown above and clean them with 50/50 isopropyl alcohol/water mix.
2. Apply threadlocker to the threads on the parts shown below.

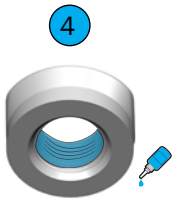



IsoSpeed — SLR (continued)

3. Apply grease to the parts shown below.

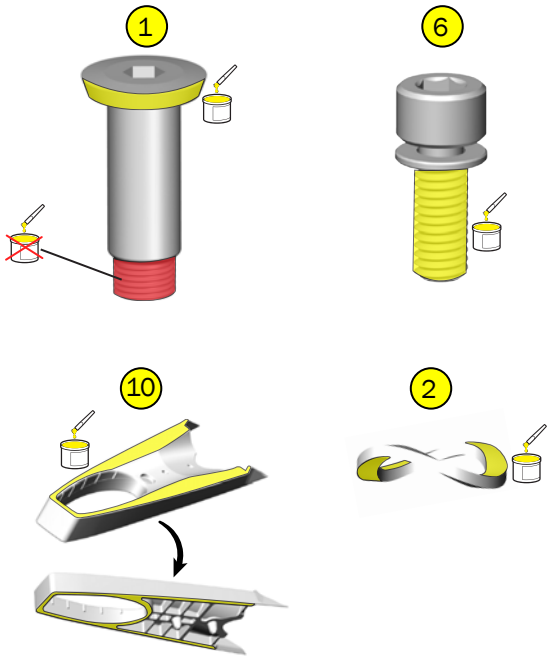

4. Reassemble all parts. Torque the tongue bolt (6) and pivot bolt (1) to the values shown on page 18.
5. Clean the inside of the tongue and seatmast grommet (10) with 50/50 isopropyl alcohol/water mix. Remove any grease that could affect the seatpost clamp.

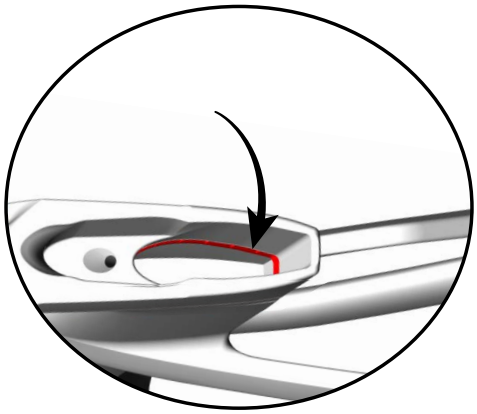

Chainkeeper

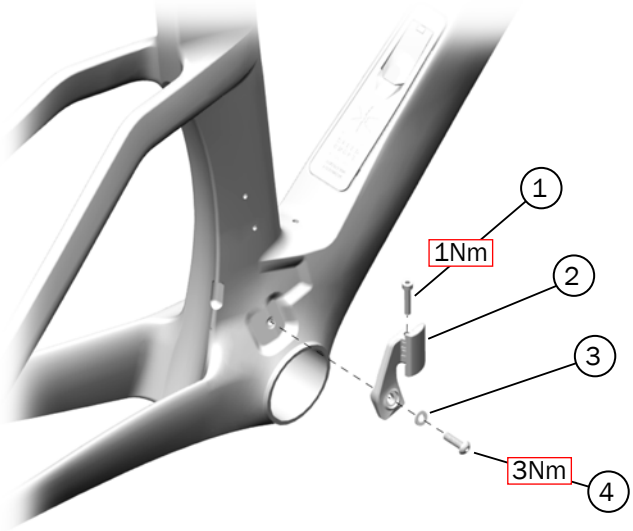

1. Bolt (M4x22mm)
2. Chainkeeper
3. Flat washer (M5x10mm)
4. Screw (M5x16mm)

573827

Adjust the chainkeeper

1. Shift to the lowest gear (largest rear cassette cog) and inner chainring.
2. Loosen the bolt (1) on the chainkeeper.
3. Rotate the loose piece (shown in red below) so there is 1mm of horizontal clearance to the chain.

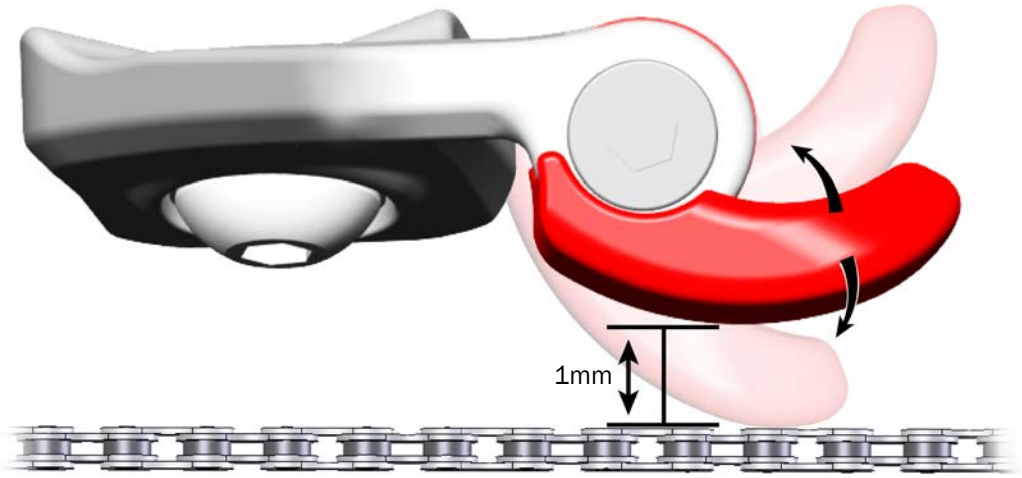

4. Tighten the bolt (1) to 1Nm.

Axles — Thru Skewers

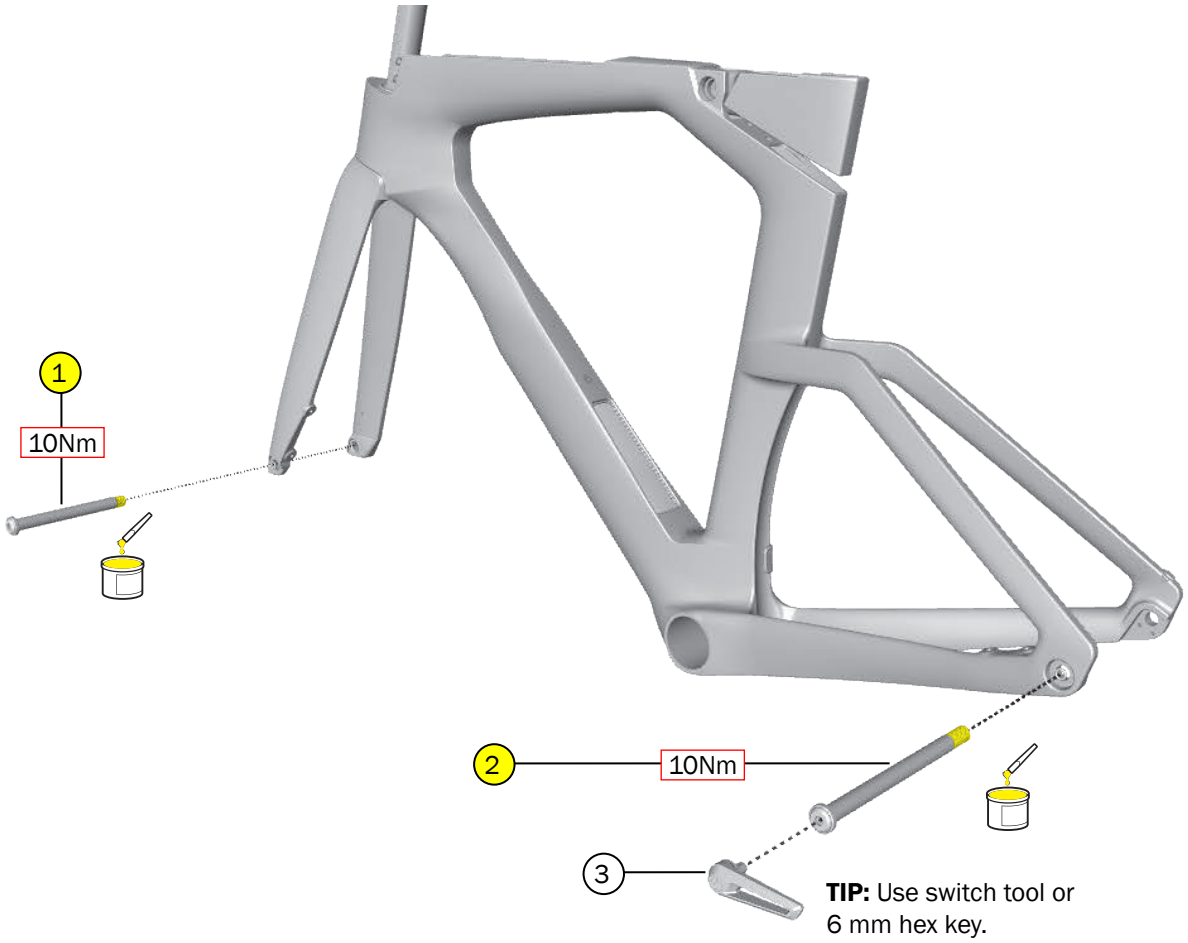

1. Front thru axle, 118.5 mm — *W5263002*
2. Rear thru axle, 165 mm — *W572054*
3. Switch tool — *W573860*

Accessories — SLR

Downtube bottle

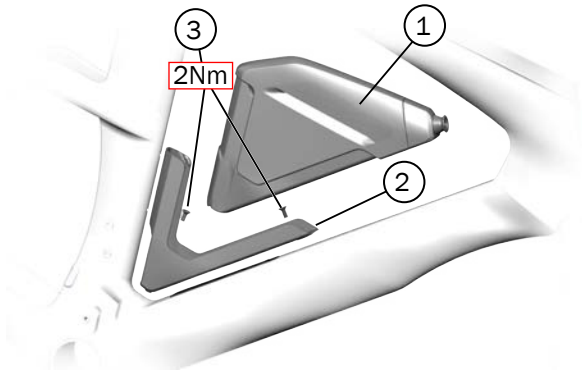

1. Water bottle — *W5254705*
2. Water bottle cage — *W5296085*
3. Bolts (M5x12mm) — *W304515*

Tool holder/flat kit W5264707

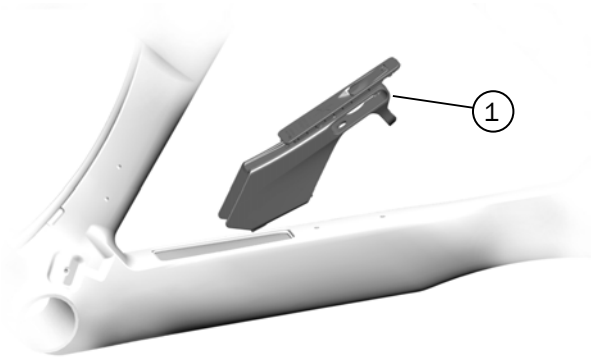

1. Tool holder — *W5264707*

Bento box

NOTE: The removable storage box, dividers, and cover are dishwasher safe (top rack only).

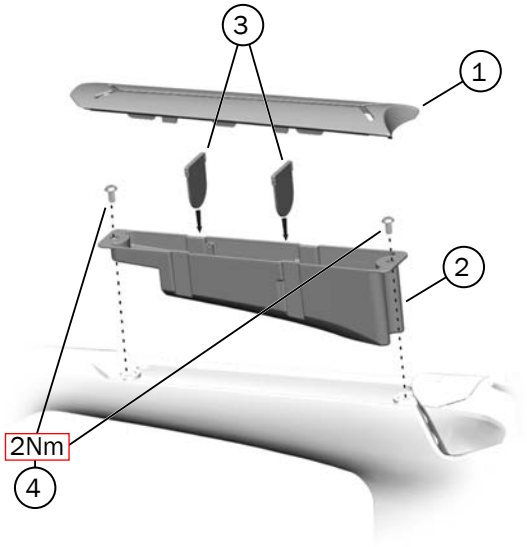

1. Cover — *W5254769*
2. Bucket — *W5254770*
3. Dividers — *W5254771*

5276409

4. Screws (M5x10mm) — *W549305*

Accessories — SLR (continued)

Seatpost light mount

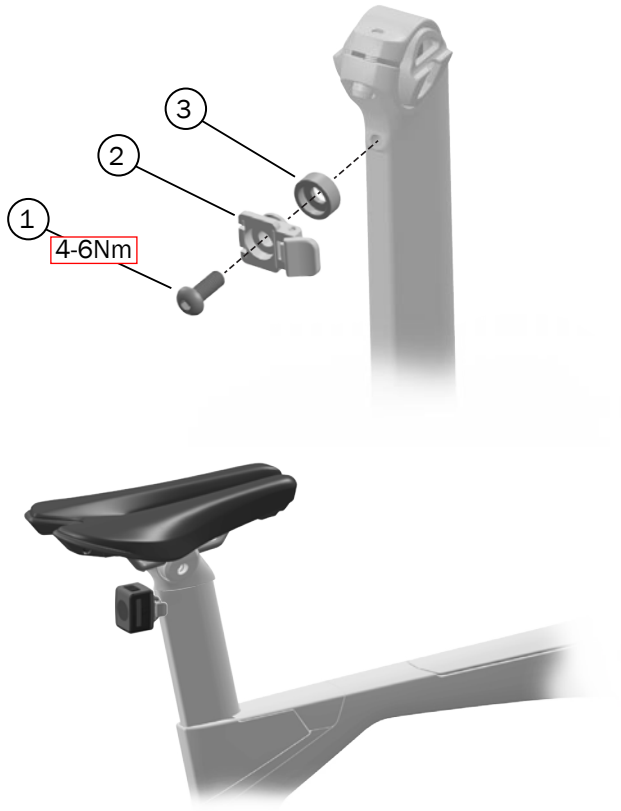

1 Bolts (M5x14mm)
2 Light bracket
3 Rubber washer

W5263880

Between-the-arms bottle cage bracket

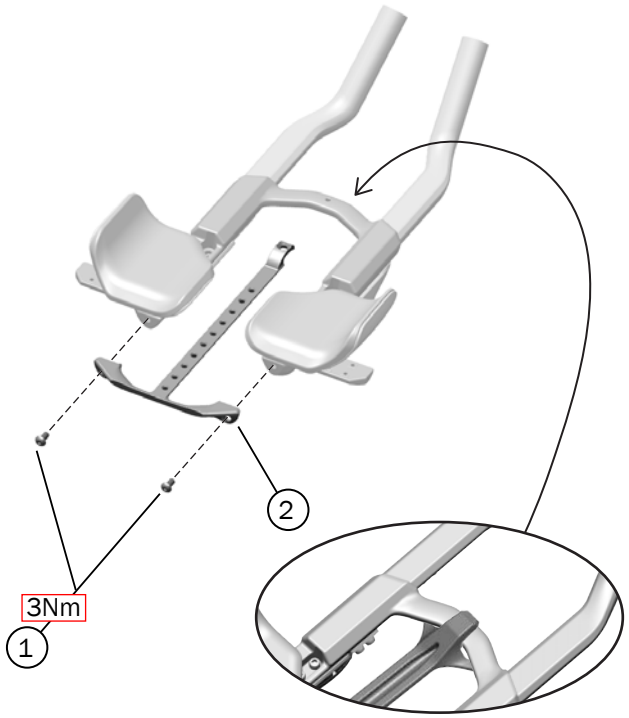

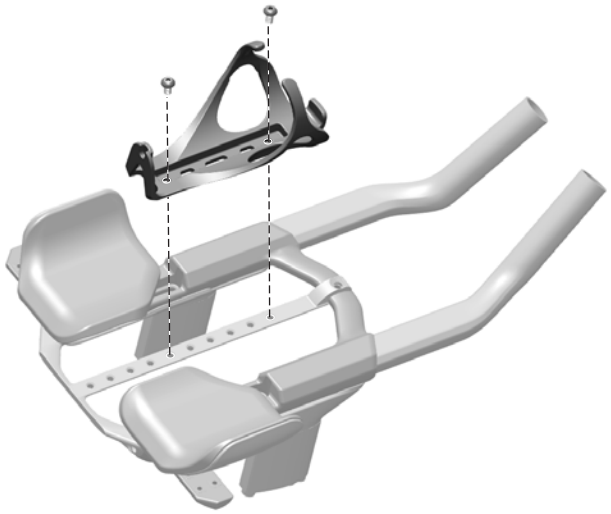

1 Bolts (M5x10mm)
2 Bottle cage bracket

W5284485

Accessories — SLR (continued)

Between the arms bottle

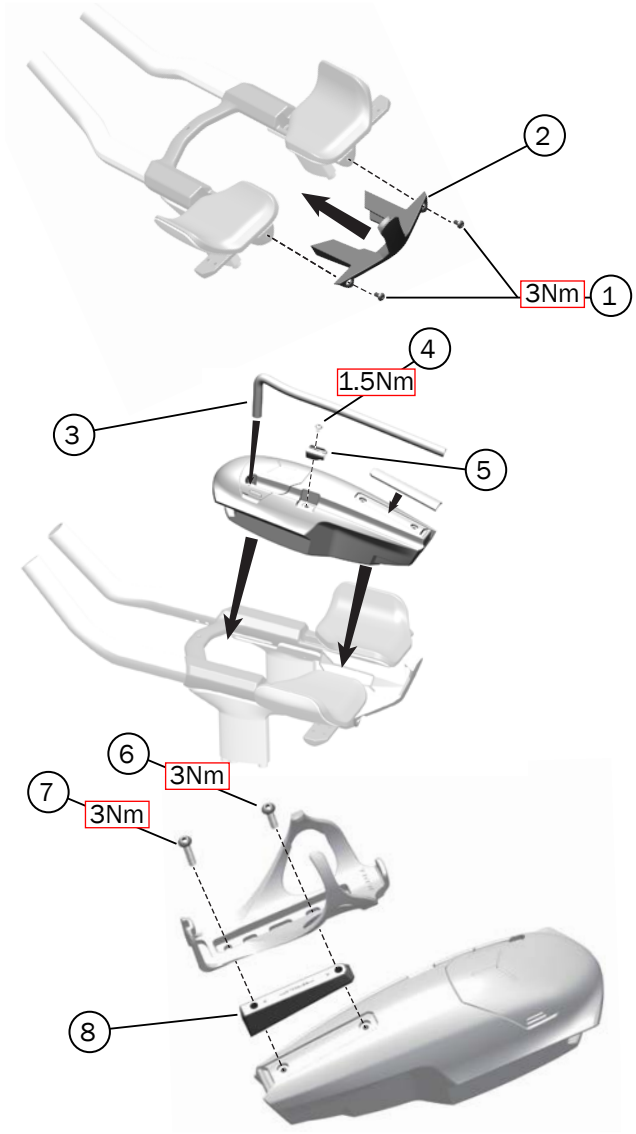

1. Bolts (M5x10mm)
2. Bottle base
3. Straw
4. Bolt (M4x6mm)
5. Straw clip
6. Bolt (M5x20mm)
7. Bolt (M5x25mm)
8. Bottle cage adapter

W5269794

Blendr Mount

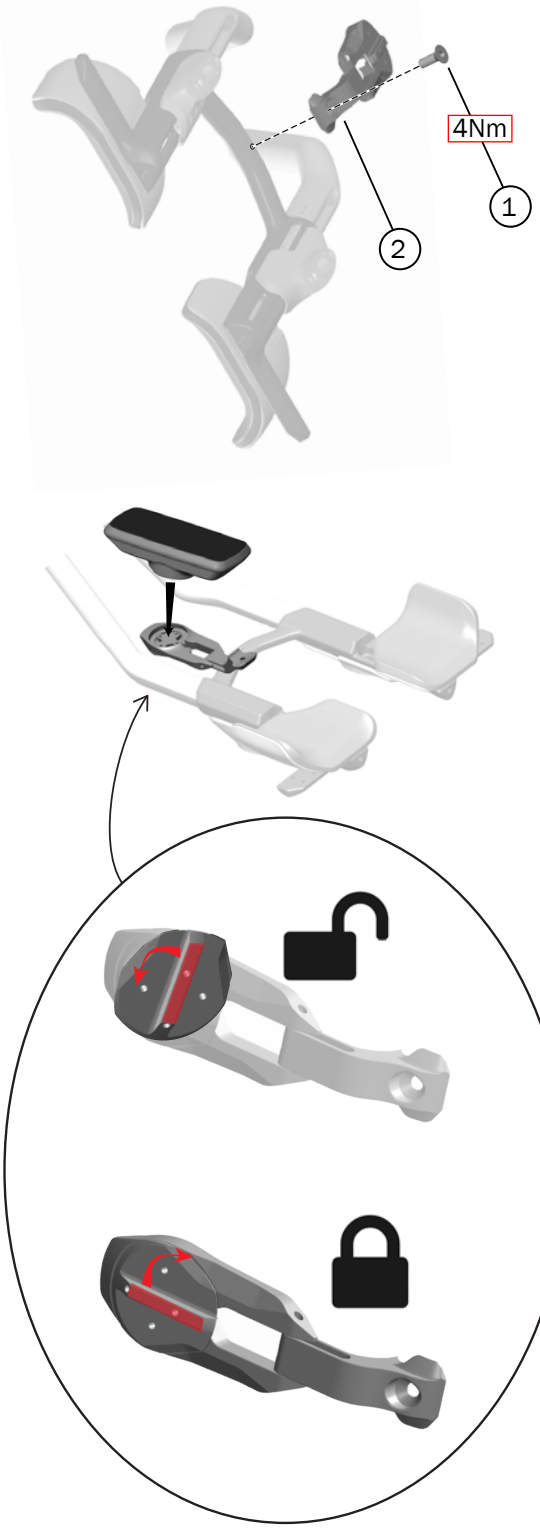

1. Bolt (M5x10mm)
2. Blendr Base

5284244 (mono)
5284245 (duo)

Specifications

		TT	SLR
Rear hub OLD		142mm	142mm
Upper fork steerer tube OD		28.6mm	28.6mm
Lower fork steerer tube OD		38.8mm	38.8mm
Bottom bracket type/width		T47/85.5mm	T47/85.5mm
Brake rotor diameter min/max		140/160mm	140/160mm
Chainline (2x)		45mm (SRAM)	45mm (SRAM)
		44.5mm (Shimano)	44.5mm (Shimano)
Chainring max	**1x**	58t	58t
	2x small	47t	44t
	2x large	55t (Shimano)	55t (Shimano)
		54t (SRAM)	54t (SRAM)
Tire width max 700c	**Front**	25mm	25mm
	Rear	25mm	28mm

Not installed parts boxes

A

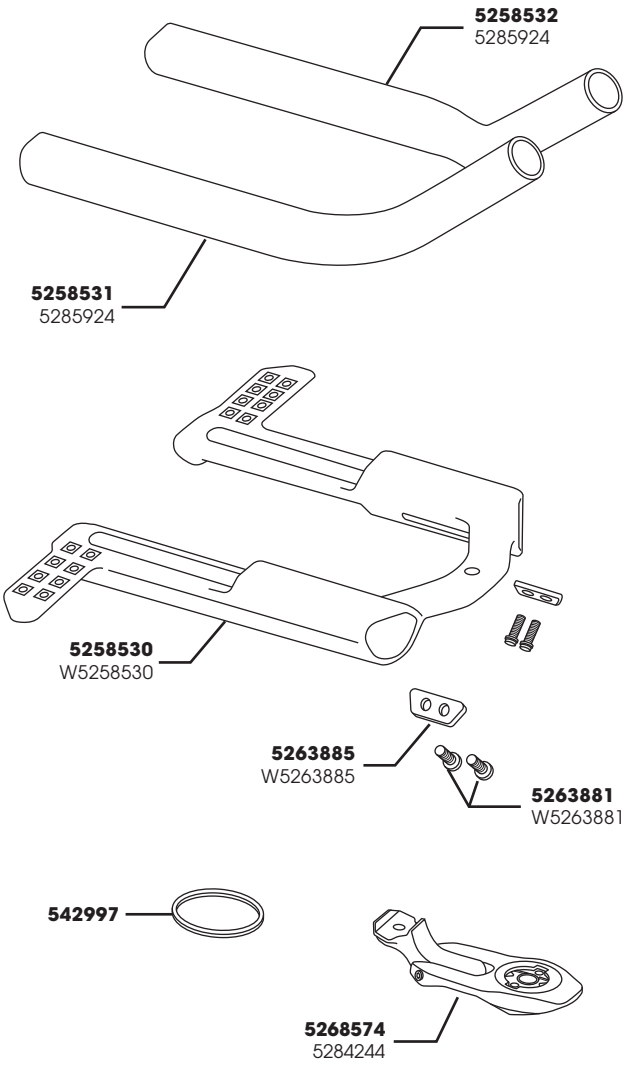

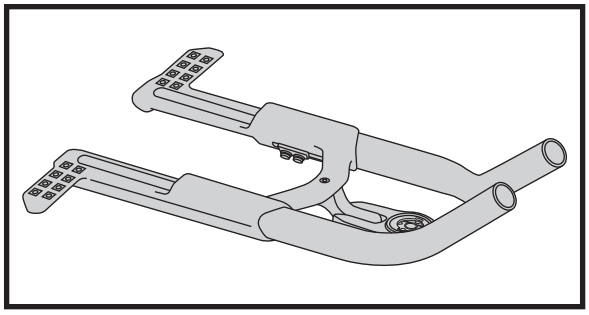

B

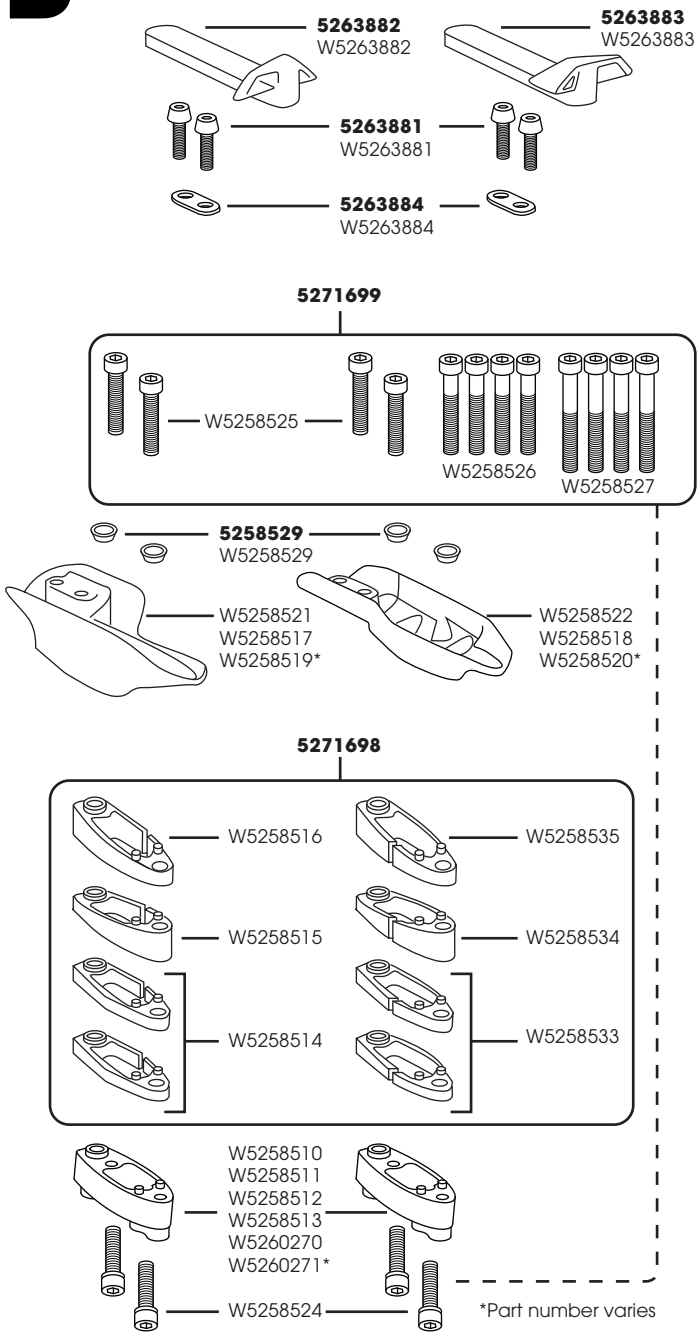

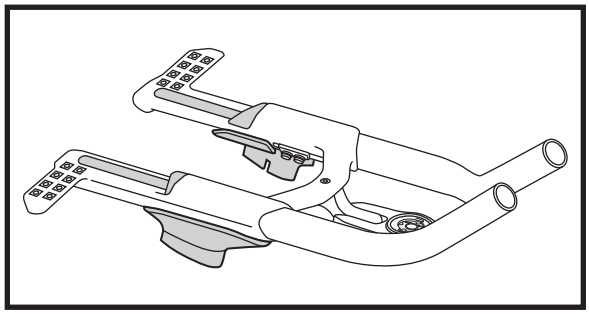

Not installed parts boxes

C

5263384
W5263384

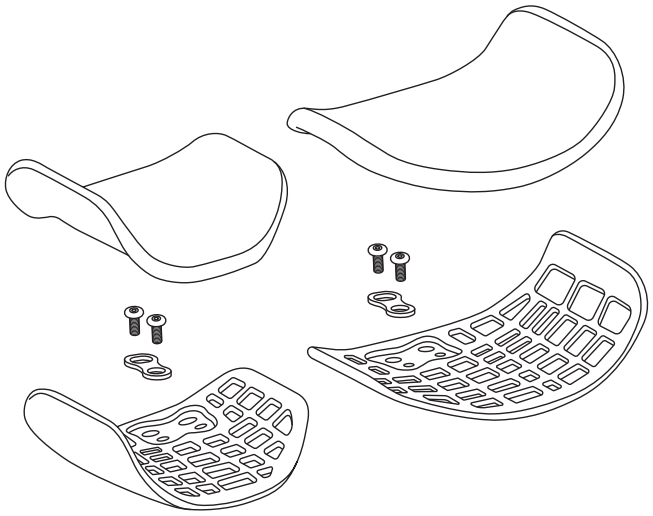

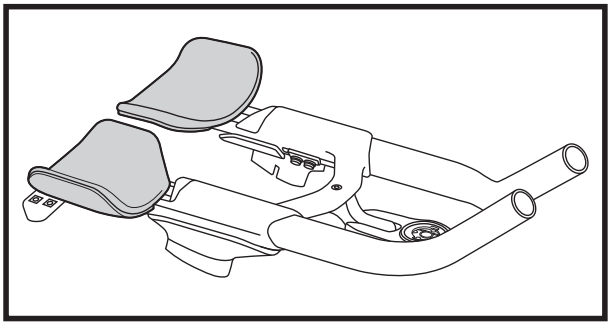

D

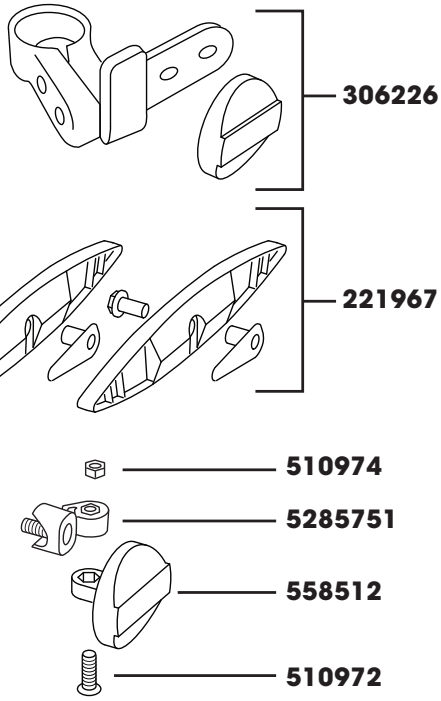

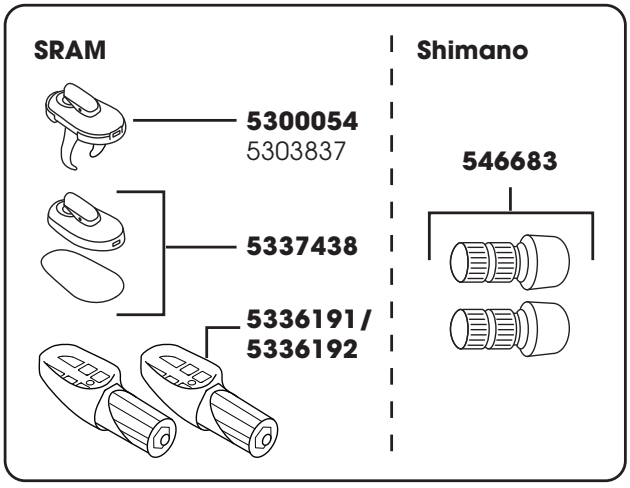

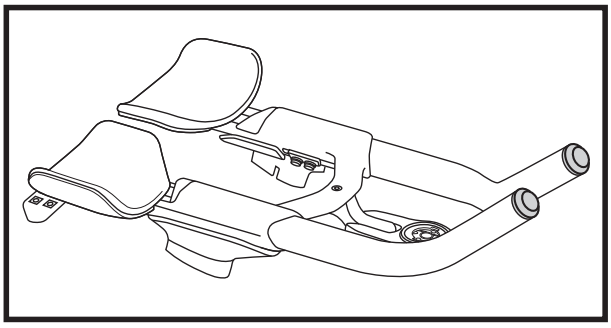

Not installed parts boxes

E

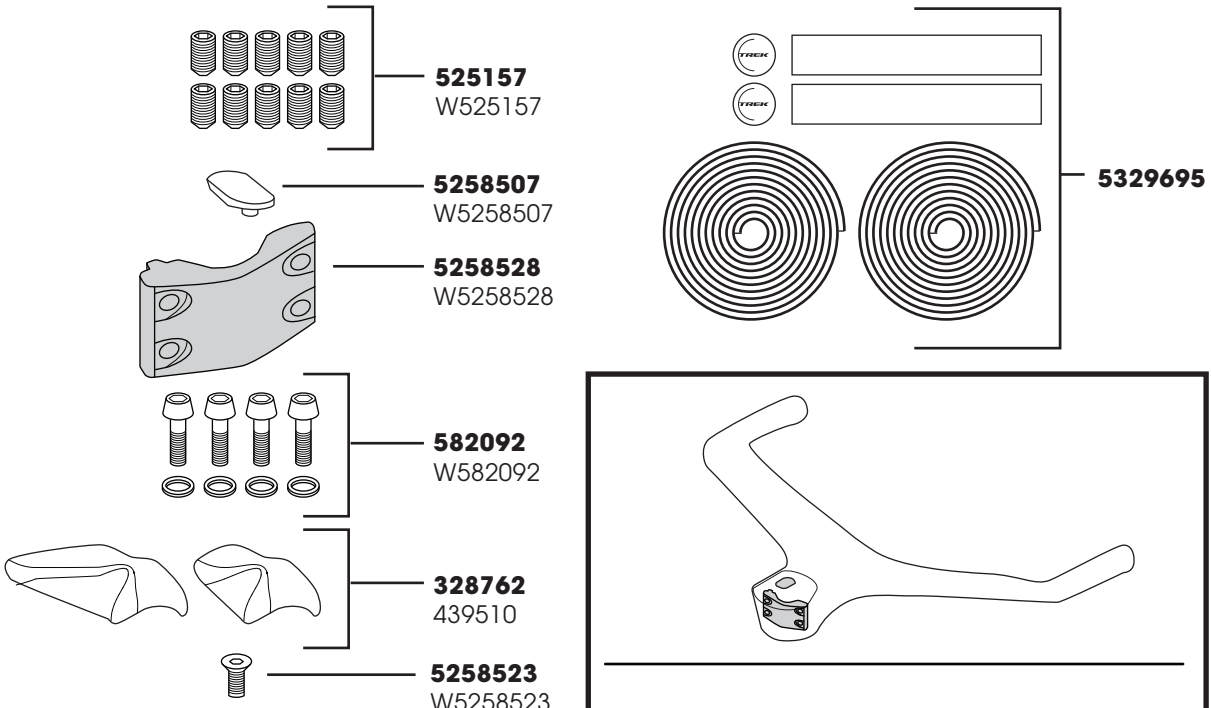

Not installed parts boxes

F

