

Slash+ 2025

SERVICE MANUAL

Contents



Safety

Headset



Adjustable headset

Idler pulley



Idler pulley

Linkage

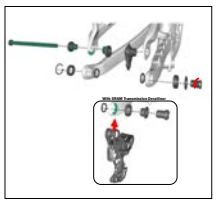

Active Braking Pivot

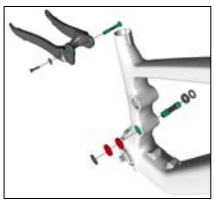

SMain pivot and chainstay

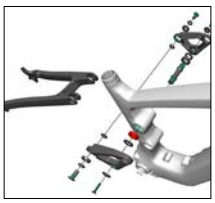

Rocker pivot and seatstay

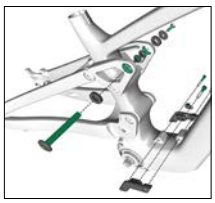

Rear shock hardware

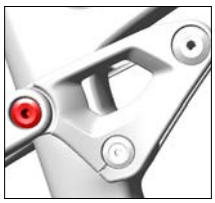

Torque order

Routing

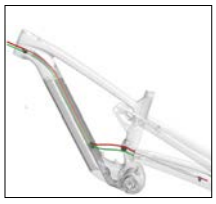

Brake and mechanical shift routing



AXS shift routing

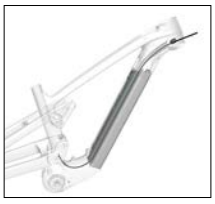

Seatpost dropper routing

Guards

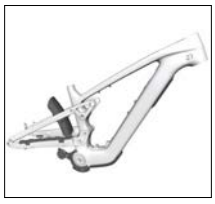

Guards

E-system



Chain guide

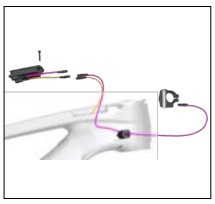

Display and remote



Charge port cover

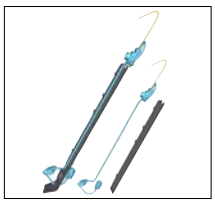

Main power cable, cable tray, and access panel

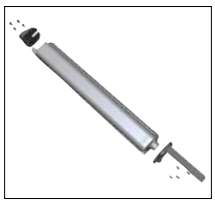

Battery

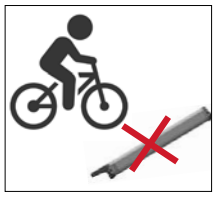

Ride the bike without the battery



Motor connection, bolts, and cover

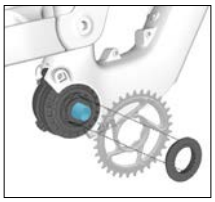

Motor lockring



Re-install the cranks

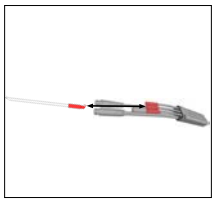

Connect lights to the TQ Smart Box

Adjust the progression



Adjust the progression

Specs

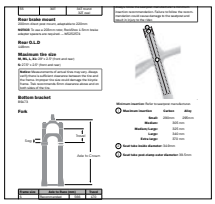

Specifications

Copyright 2024 Trek Bicycle Corporation All Rights Reserved

Safety

⚠ WARNING

Properly tighten hardware

Always tighten hardware to the specified torque. Over-tightening hardware could deform or break the hardware or components. Under-tightening hardware could cause hardware or components to become loose. Either situation could damage the bicycle and result in injury to the rider.

⚠ WARNING

Reapply threadlocker

All reused-fasteners with pre-applied threadlocker must be cleaned with isopropyl alcohol and have new threadlocker applied before re-assembly. If threadlocker is not applied, the fasteners may loosen which could damage the bicycle and result in injury to the rider.

Legend

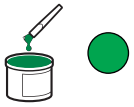
Apply grease


Do not apply grease

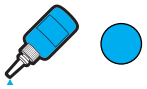
Apply threadlocker

Nm — Torque

★ Zip tie

Scope

This manual contains parts diagrams, specifications (such as grease and torque values), instructions, and helpful tips. It does not contain instructions for all components (such as brake calipers). Refer to the original manufacturer for more information.

Additional resources

- Trek Bicycle Owner's Manual: *trekbikes.com/manuals*
- TQ Quickstart Guide: *trekbikes.com/manuals*
- TQ Comprehensive Owner's Manual: *trekbikes.com/manuals*
- TQ Service Manual: *tq-ebike.com*
- Trek's YouTube channel: *youtube.com/trekbikes*

NOTICE:

- This e-bike is authorized for use ONLY with a 27.5" rear wheel.
- Installation of a different size wheel could change the classification of the e-bike and make it ineligible for operation depending on state/local laws.
- Dealers: you are not authorized to install a larger wheel or to knowingly sell a larger wheel for installation on the bike.

Adjustable headset

Optional: For instructions on switching to the angle adjustable cups, see the Adjustable Headset Instructions on the Slash+ page on trekbikes.com.

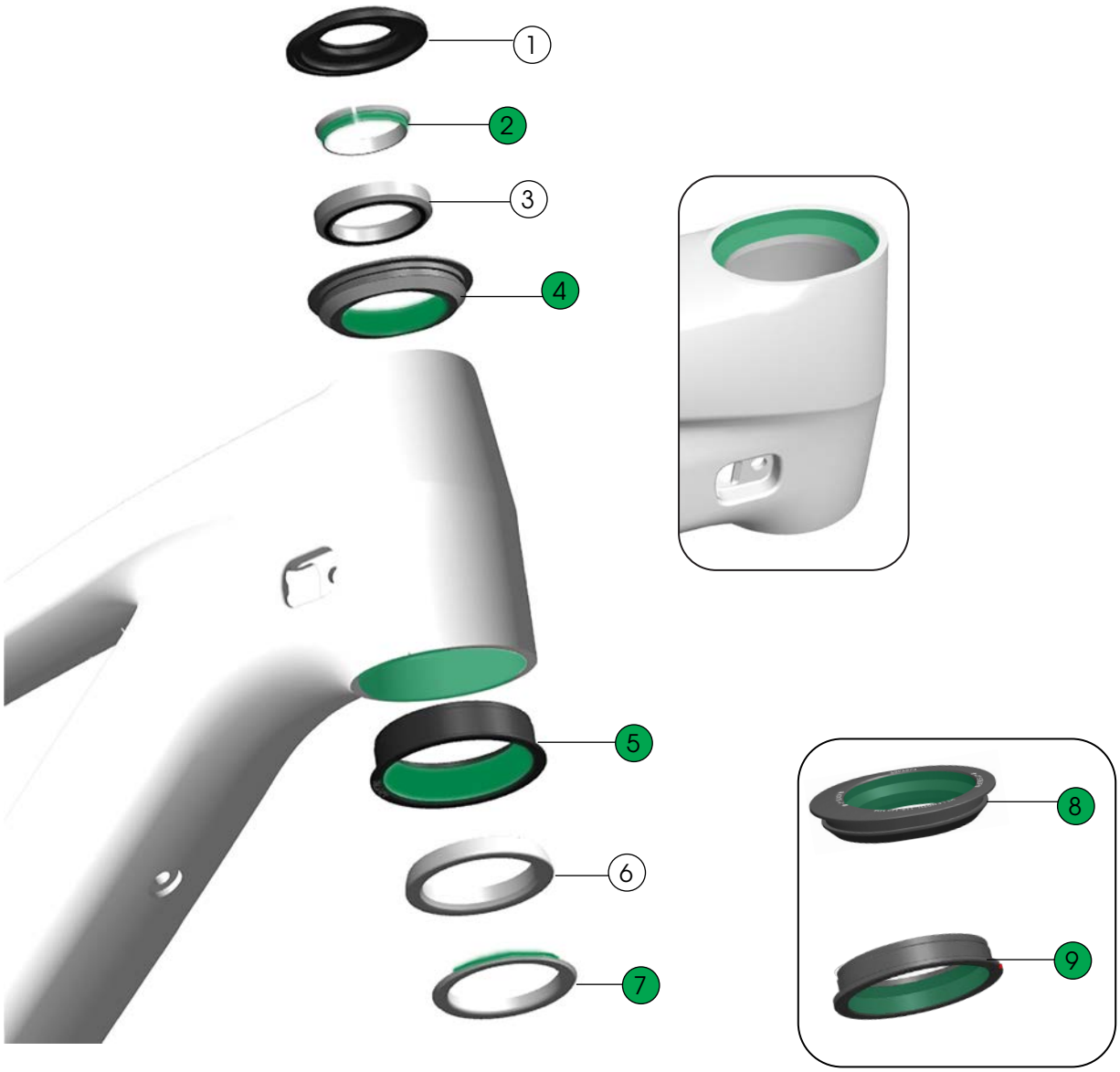

1. Upper bearing cover — W5275173
2. Compression ring — W532842
3. Upper bearing — W531676
4. Upper cup, 0° angle — 5304949
5. Press-fit lower cup, 0° angle — 5304949
6. Lower bearing — W532843
7. Crown race — W532844

— W5285212

Angle adjustable cups

8. Shorter upper cup, S – M frames — W5295319
   Taller upper cup L – XL frames — W5295274
9. Lower cup, all frame sizes — W5294449

Idler pulley

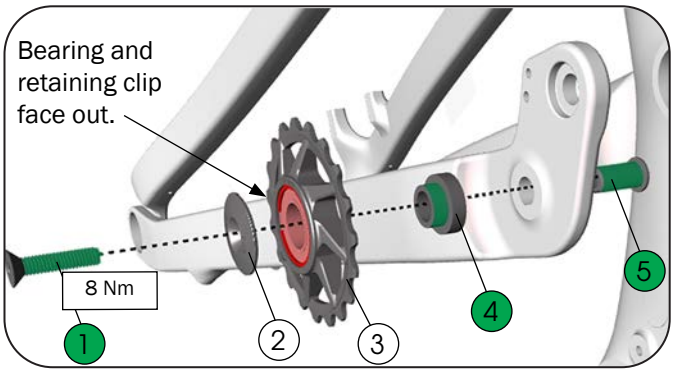

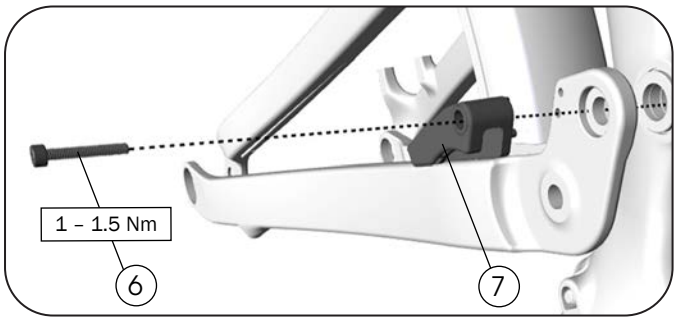



1. Fastener, stainless steel, M6 x 25 mm — W5270150
2. Idler pulley concave washer — W5305535
3. Idler pulley assembly — W5325188
4. Idler pulley spacer — W5305382
5. Idler pulley post — W5305204
6. Fastener, socket head, M4 x 25 mm, Trek service part not available. Source locally.
7. Idler guide — W5307894

Active Braking Pivot

See Torque order on page 9.

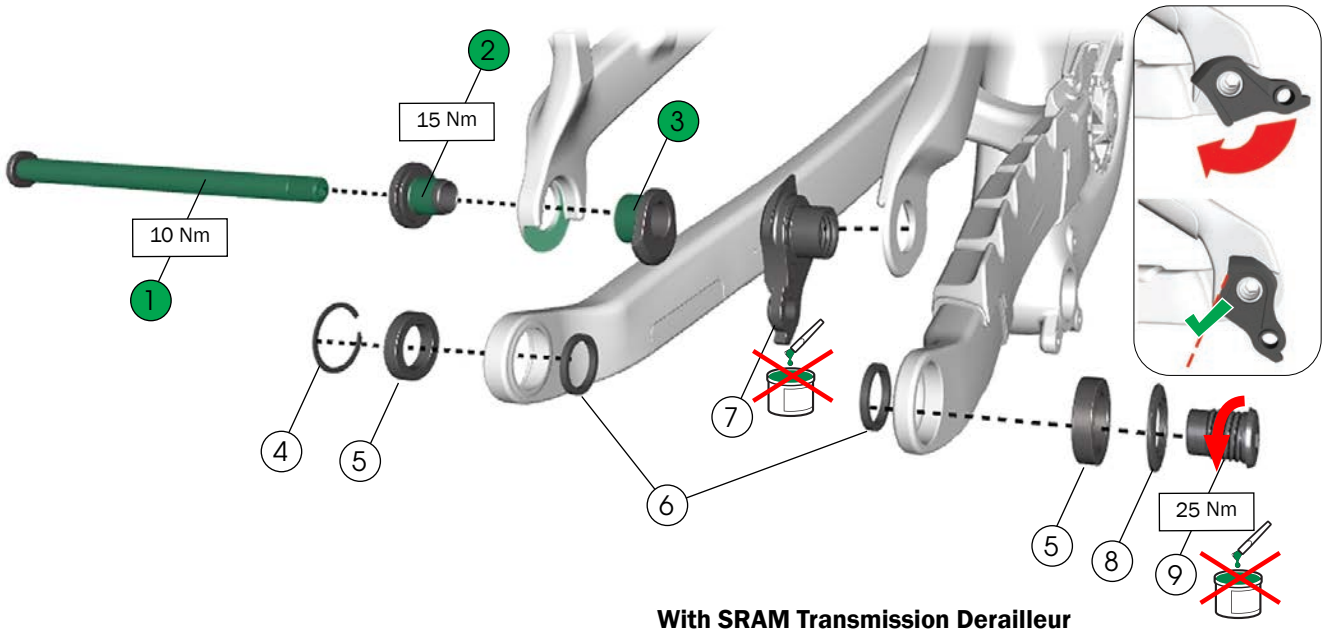

With SRAM Transmission Derailleur

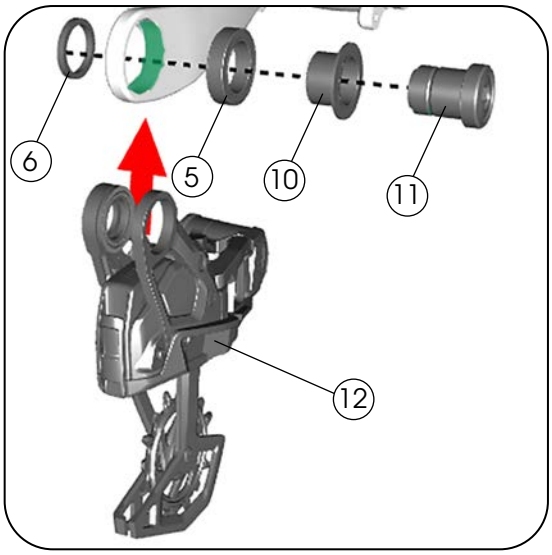

Important: For proper derailleur adjustment, the chain guide must be fully installed. See Chain guide on page 14.

1. Thru axle, M12 x 167.35 mm — W583469
2. Non-driveside ABP bolt — W5251141
3. Non-driveside ABP dropout nut — W5269707
4. Retaining ring — W5251279
5. Bearings, 20 x 30 x 7 mm — W5256340
6. Spacers, 25 x 20 x 3 mm— W583422

— W5272776

7. Derailleur hanger
   NOTICE: Do not apply grease.
8. Washer, 30 mm
   NOTICE: The washer is frame-specific. Install only the washer size specified.
9. Bolt
   NOTICE: Do not apply grease. Do not overtighten. Overtightening may damage the hanger.

— W5271425

10. Bushing
11. Mounting bolt
12. SRAM Transmission Derailleur

Refer to installation manual on sram.com.

Main pivot and chainstay

See Torque order on page 9.

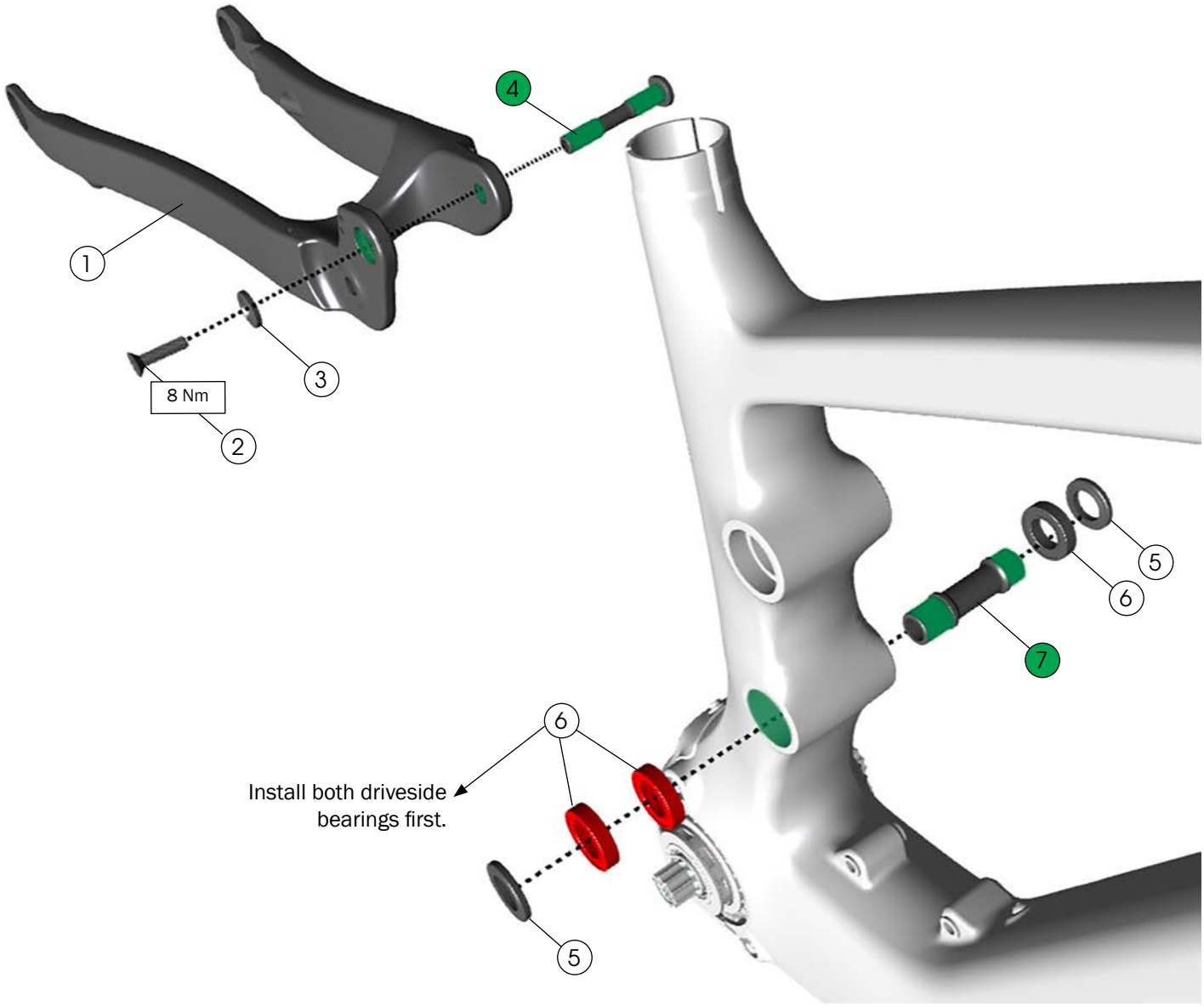

1. **Chainstay** — 48333*
   *Paint matched part. See trekbikes.com to find the color-matched part for your bike.
2. Fastener, M6 x 25mm — W5270150
3. Concave washer — W5270027
4. Thru axle, 12 x78 mm — W5305383
5. Spacers, 4 mm width — W5305806
6. Bearings, 17 x 30 x 7 mm — 5290435
7. Flanged main pivot axle — W5305807

Rocker pivot and seatstay

See Torque order on page 9.

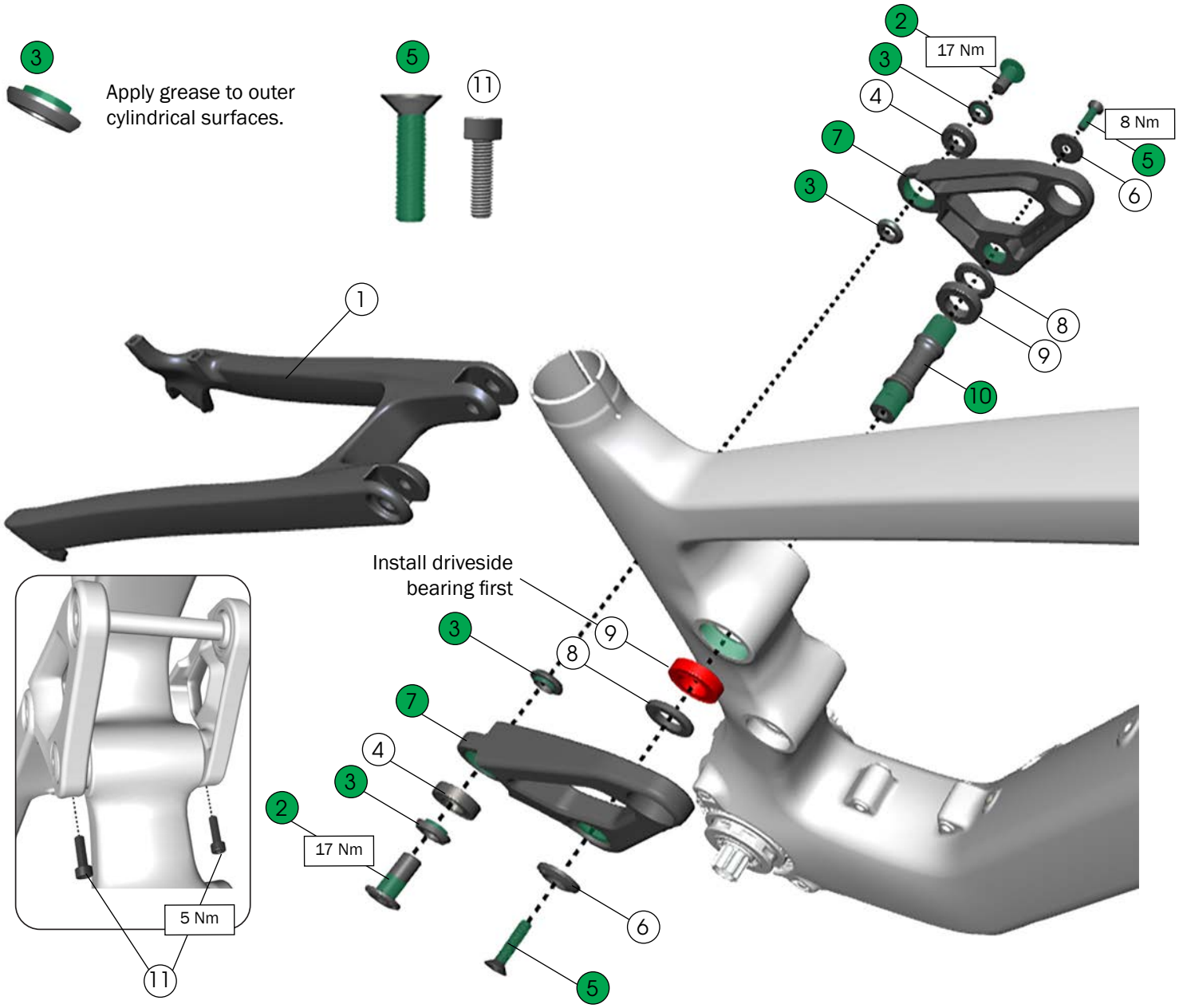

1. **Seatstay** — 48334*
2. Fasteners, M10 x 21 mm — W600629
3. Hat-style washers — W5257190
4. Bearings, 12 x 24 x 6 mm — 5290440
5. Fastener, M6 x 25 mm — W5270150
6. Concave washers — W5270027
7. Two-piece rocker pivot — 48335*
8. Spacers, 4 mm wide — W5305806
9. Bearings, 17 x 30 x 7 mm — 5290435
10. Rocker link axle — W5305805
11. Fasteners, M5 x 18 mm — W5256244

*Paint matched part. See trekbikes.com to find the color-matched part for your bike.

Rear shock hardware

See Torque order on page 9.

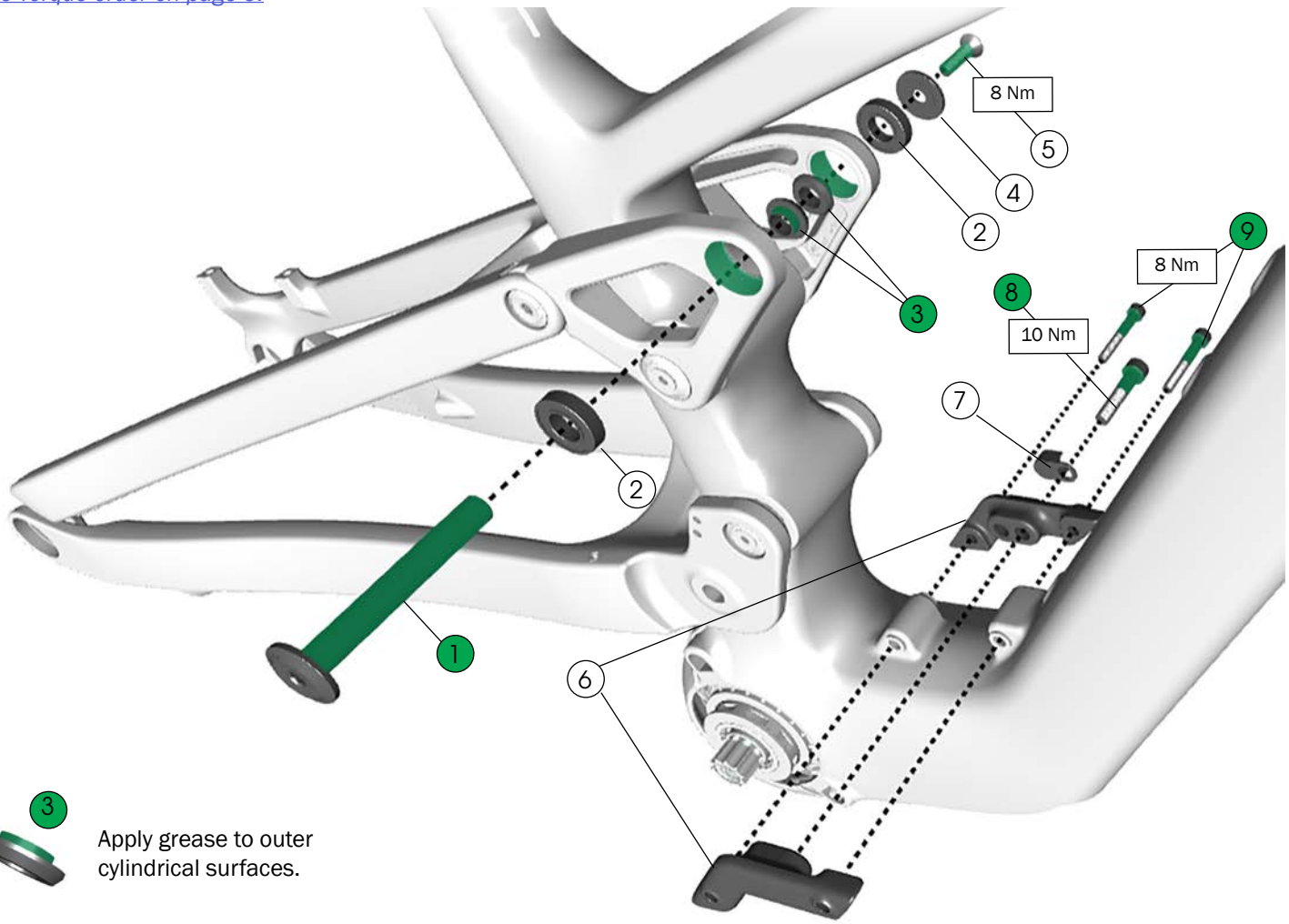

Apply grease to outer cylindrical surfaces.

1. Upper shock mount axle, M6 x 67 mm — W5305189
2. Bearings, 12 x 24 x 6 mm — 5290440
3. Hat-style washers — W5257189
4. Concave washer — W5305190
5. Fastener, M6 x 25 mm — W5270150
6. **Lower shock mounts for use with:**
   Size S, 27.5" rear wheel — 5317350
   Size M – XL, 27.5" rear wheel — 5317349
7. Progression mino link — 5303333
   Includes a More/Less nut. Do not use on Slash+.
8. Fastener, M8 x 40 mm — W5305730
9. Fasteners, M6 x 40 mm — W5305731

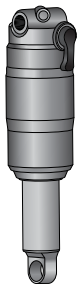

Shock Dimensions

Eye-to-Eye-length: 230 mm

Stroke length: 65 mm

Shock air can mount/bolt: 54 mm x 10 mm

Shock shaft mount/bolt: 20 mm x 8 mm

For a list of compatible shocks, refer to the FAQ on the Slash+ product pages on trekbikes.com.

Torque order

Important: Remove the bike from the bike stand and set it on the ground before torquing all fasteners to spec.

1



2

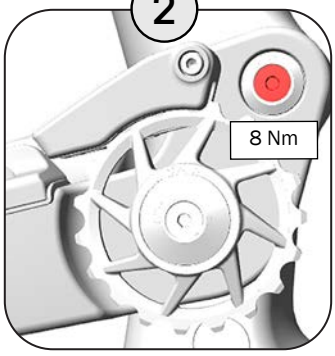

3

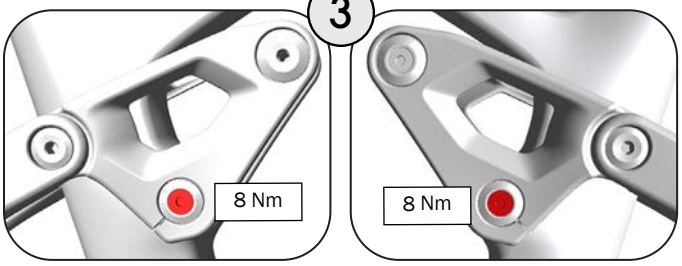

4

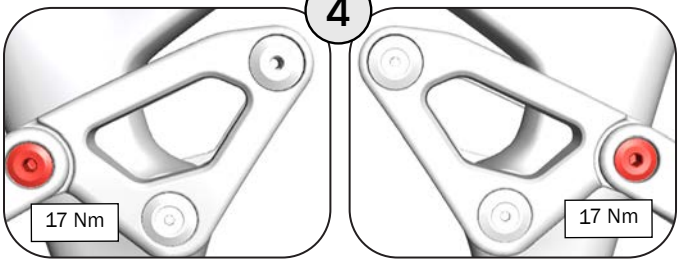

5

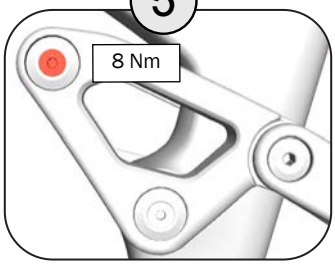

6

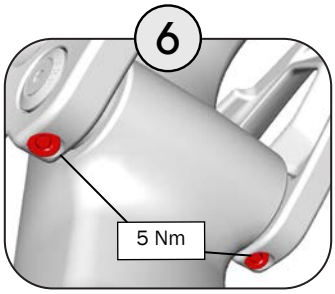

7

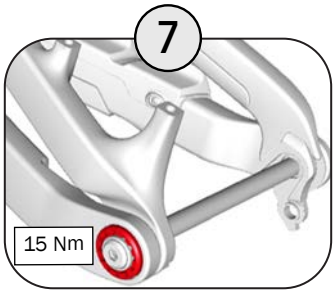

8

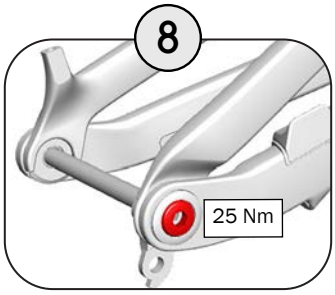

9

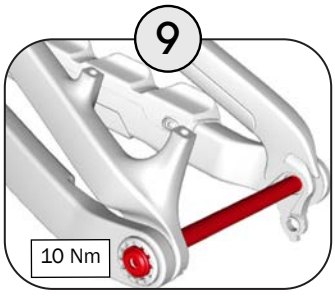

10

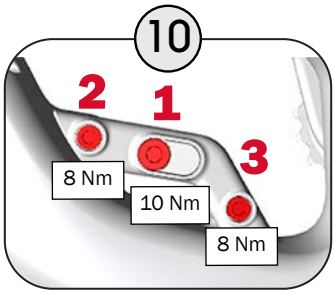

Brake and mechanical shift routing

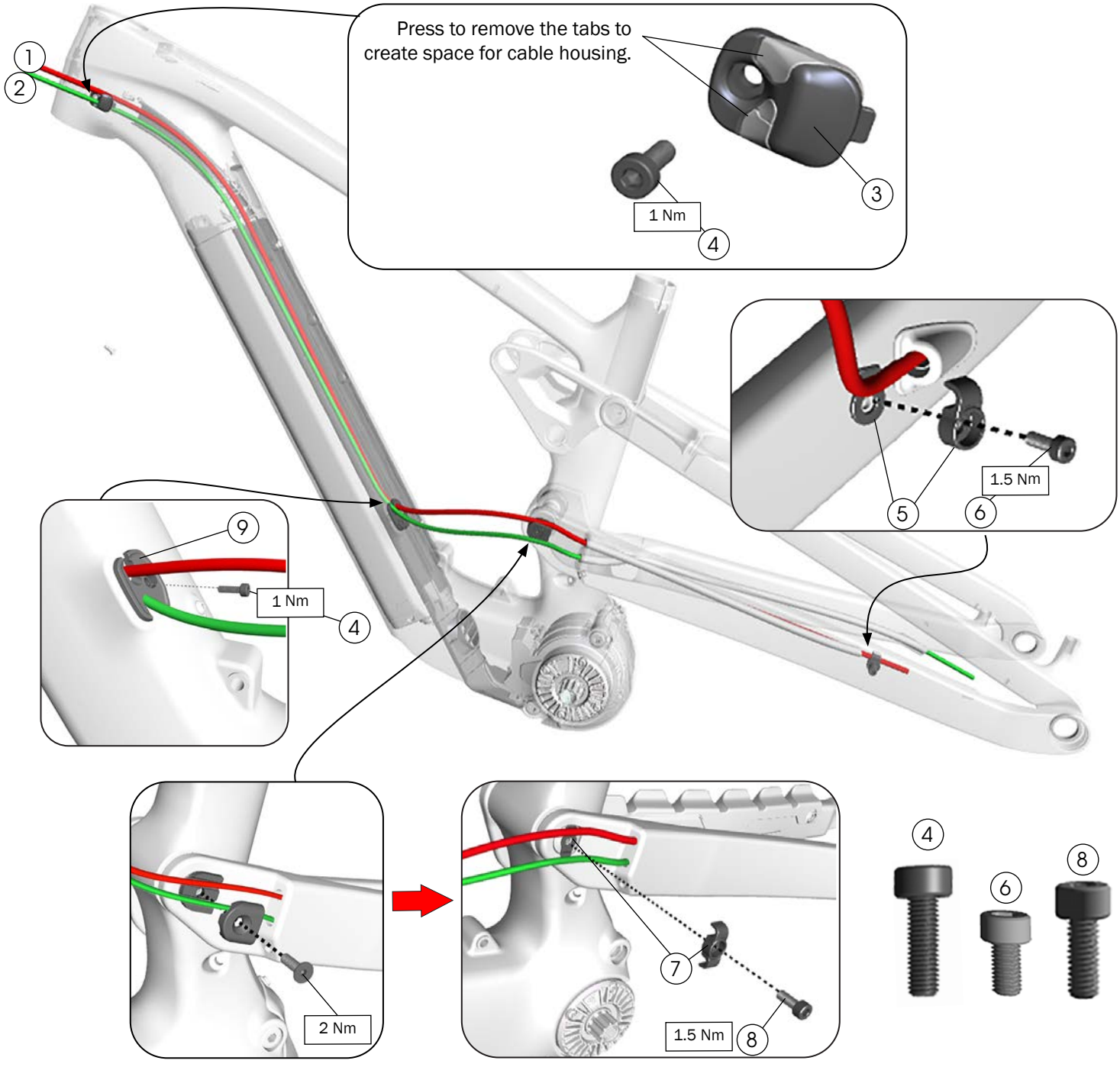

1 Rear brake hose

2 Rear derailleur cable housing

3 Cable entry guide

4 Fasteners, M3 x 10 mm — W545633

— 5317471

5 Bolt-on cable guide, single — W311727*

6 Fastener, M5 x 8 mm — W596823

7 Bolt-on cable guide, double

8 Fastener, M5 x 16 mm

— W311726

9 Cable exit guide — W5316283

***NOTICE:** The fastener included with the cable guide is too long. Do not use it. Use the fastener shown above.

AXS shift routing

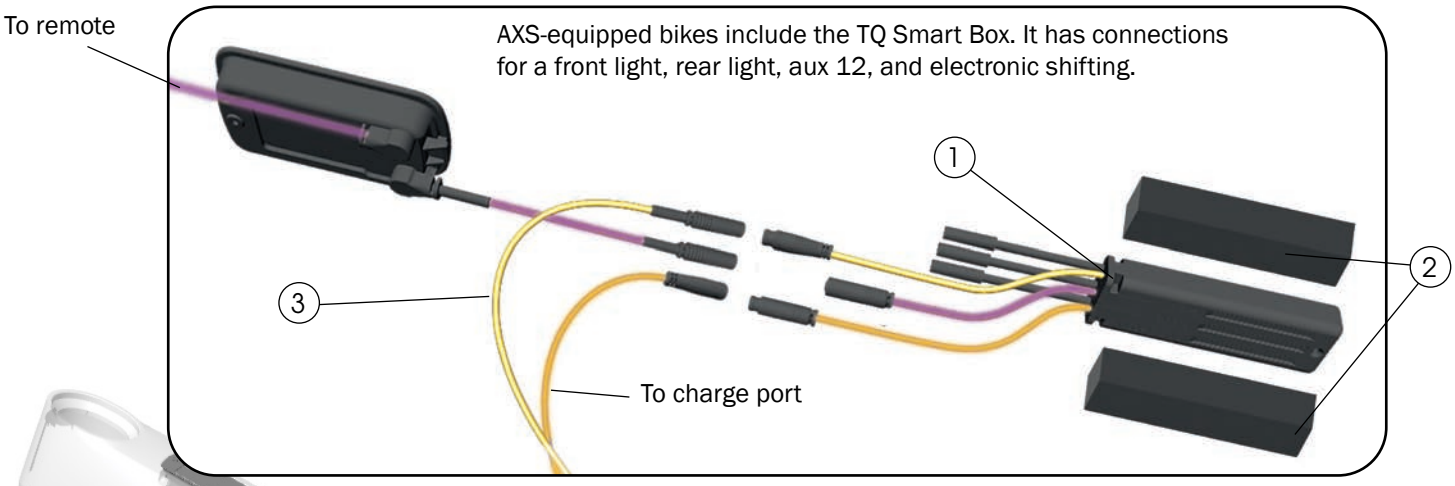

Derailleur powered by TQ battery
Connect SRAM extension cord cable and TQ AXS adapter cable here.

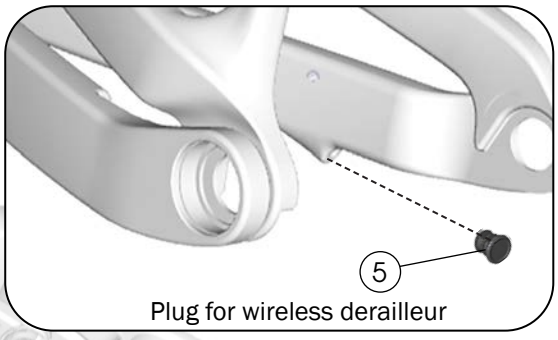

Plug for wireless derailleur



Size S:
Smart box and foam block locations

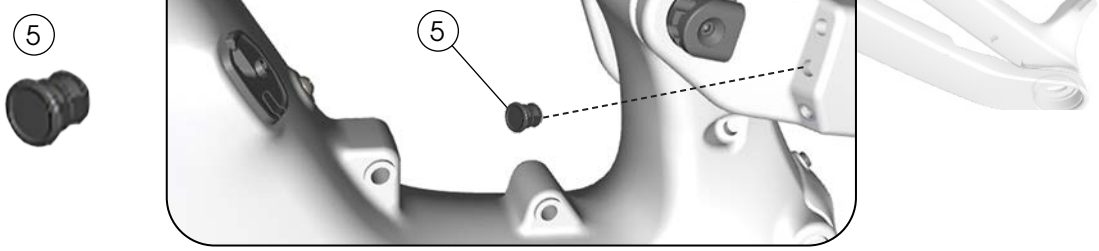

Plug for wireless derailleur

1. TQ Smart Box — 5289564
2. Foam blocks, set of two — 5305634
3. TQ AXS adapter cable, Higo connection, TQ p/n — 5289566
4. SRAM extension cord, Higo connection, 880 mm, SRAM p/n — 00.3018.369.000
5. Cable exit plugs, 5.5 mm — W600209

Seatpost dropper routing

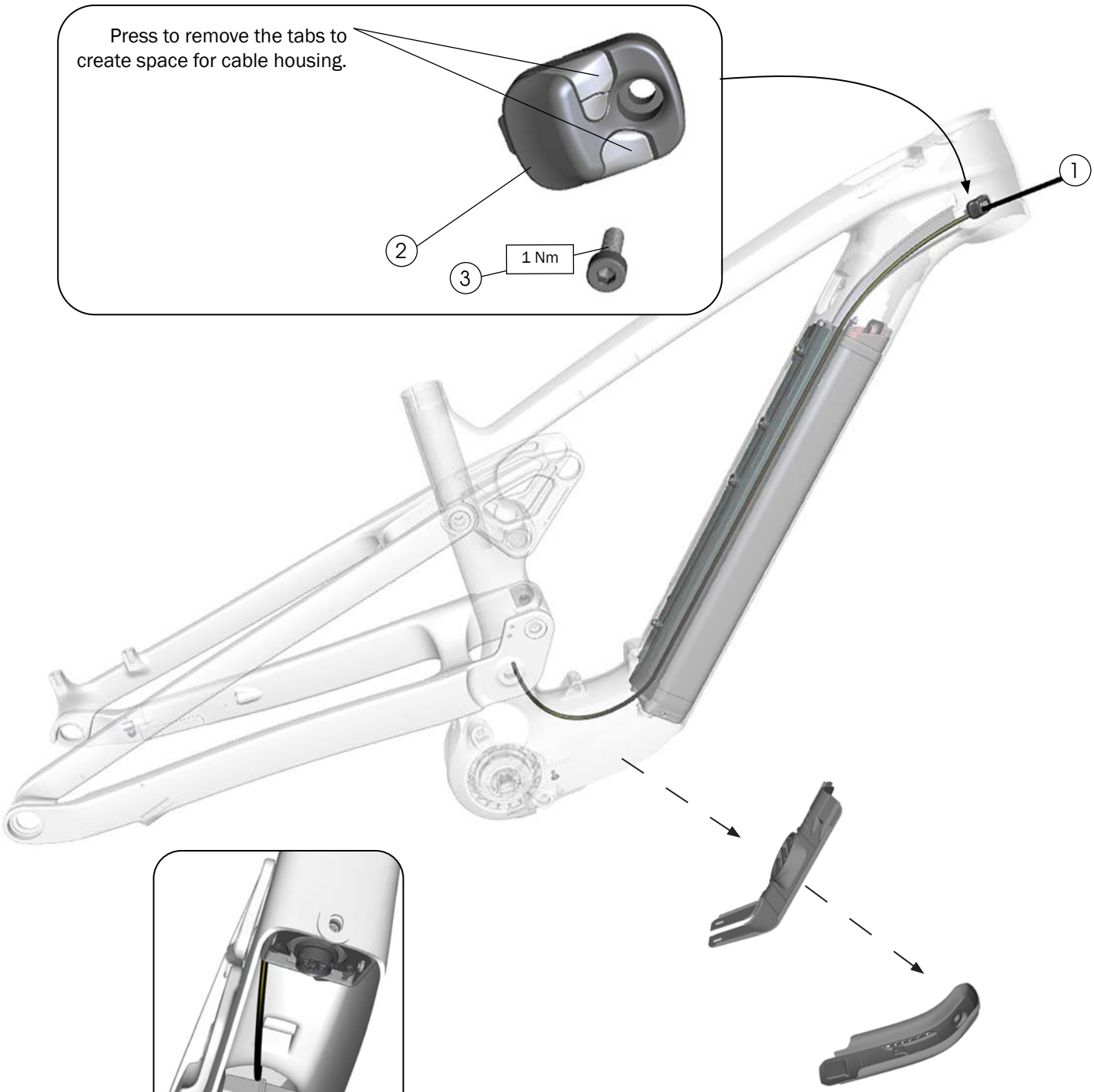

Remove the access panel (See page 19) and the battery cover (See page 21) for better access to route the seatpost dropper housing.

1. Seatpost dropper housing
2. Cable exit guide
3. Fastener, M3 x 10 mm

— 5317471

Guards

Adhesive guard (1)

Use isopropyl alcohol to clean the frame surface where the guard attaches. Wait for the alcohol to dry before applying the guard.

NOTICE: Do not clean the entire frame with isopropyl alcohol. Isopropyl alcohol could damage the paint.

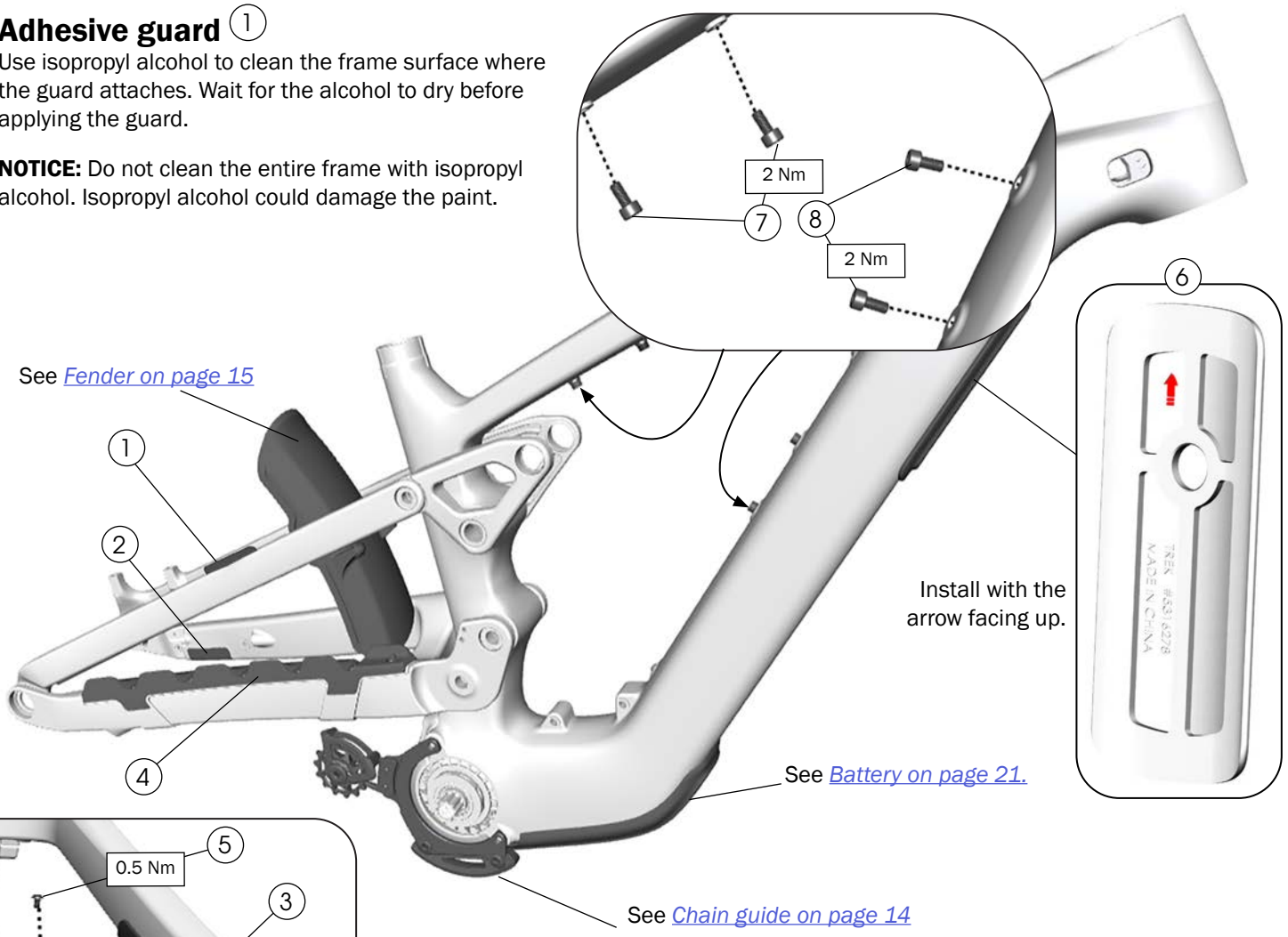

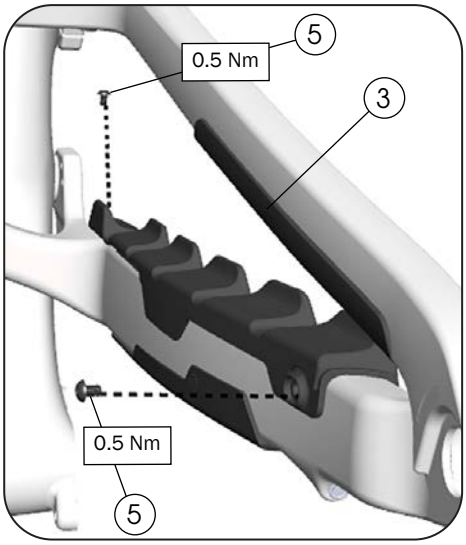

Bonded strike guards (2) (3)

1. To improve adhesion, use sandpaper to roughen the backside of the guards and/or remove remnants of the old guard from the areas of the frame where epoxy will be applied.
2. Attach the guards with a two-part epoxy.
3. Allow the guards and epoxy to cure for 24 hours.

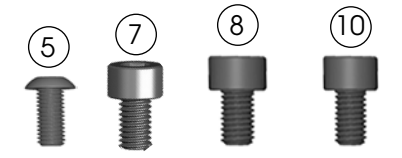

(1) Adhesive guard — W326986

(2) Rotor guard — W580881

(3) Seatstay guard — W5255862

(4) Chainstay guard — W5306300

(5) Fasteners, M4 x 6 mm — W575056

(6) Shuttle guard — W5316278

(7) Fasteners, M5 x 8 mm — W596823

(8) Fasteners, M5 x 10 mm — 5332051

Chain guide

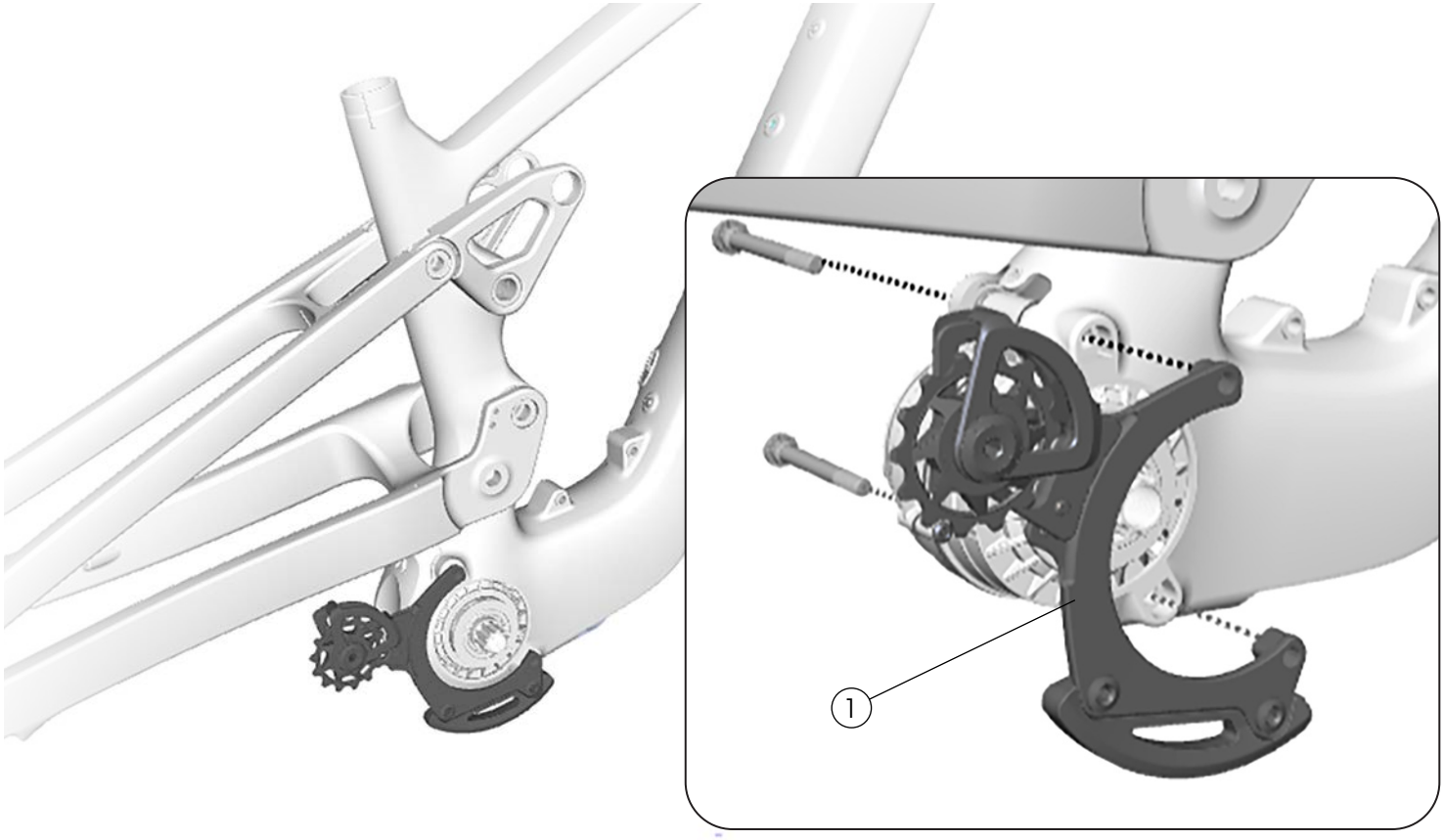

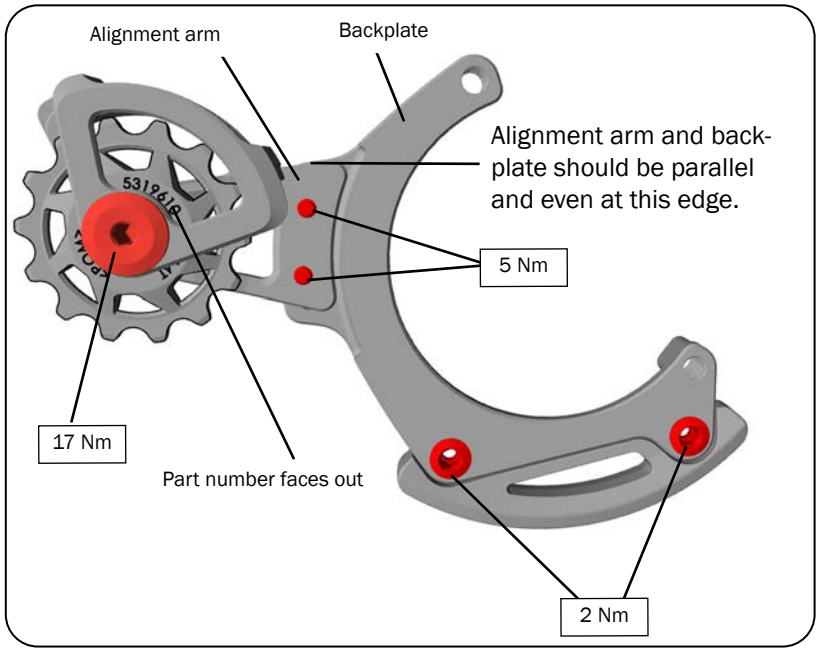

Chain guide installs via the motor bolts. Install with the motor.

Important: Install before adjusting the derailleur.

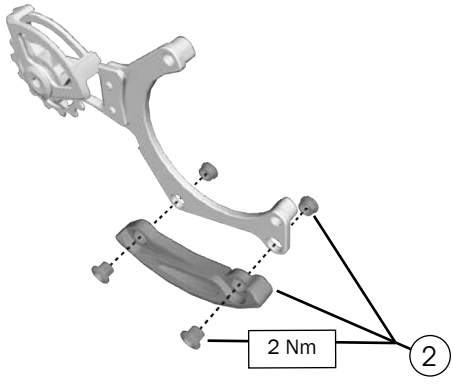

1. Chain guide — W5319609
2. Bash guard — 5350389

Fender

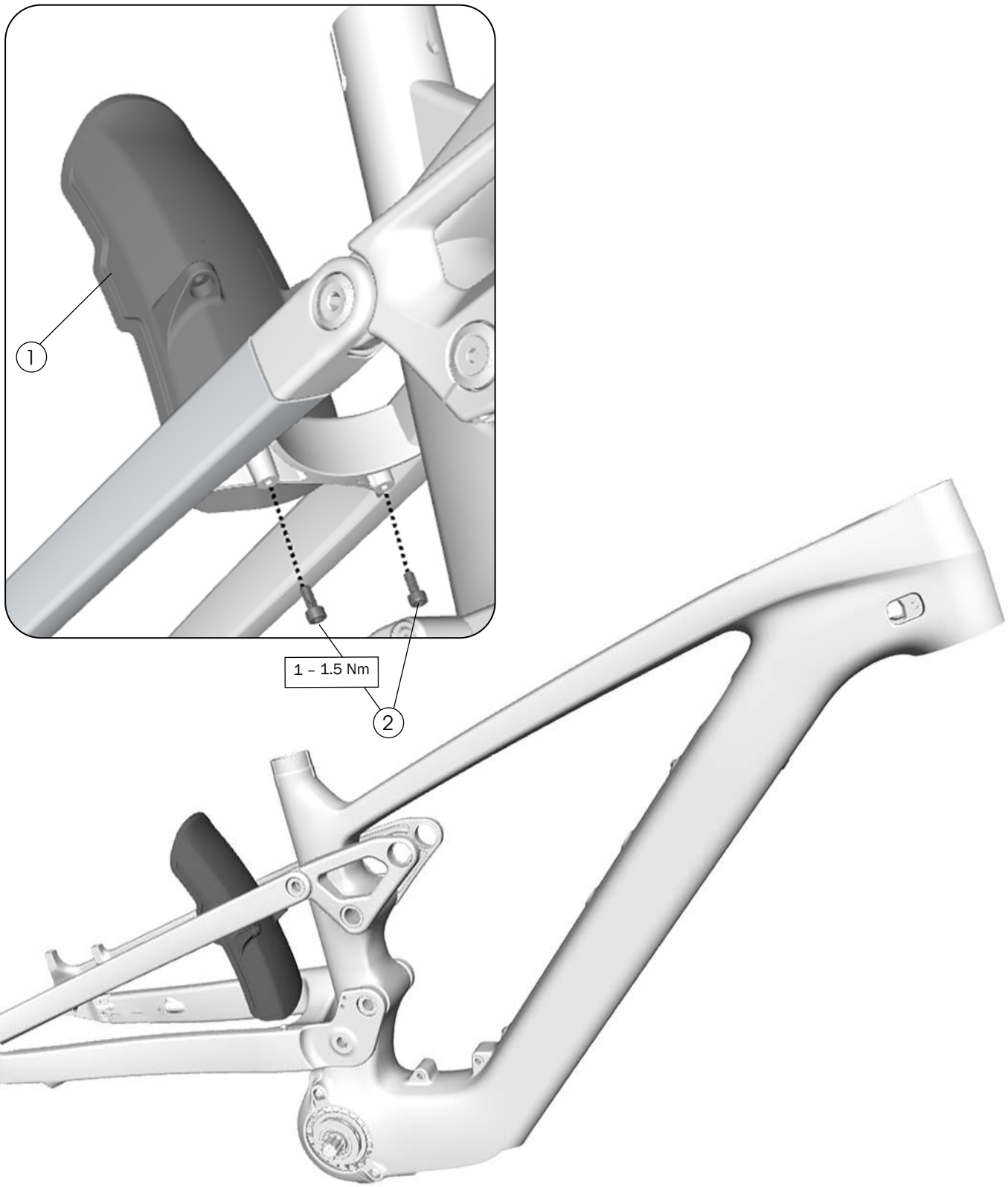

1 Fender

2 Fasteners, M4 x 10 mm

W5308789

Speed sensor routing

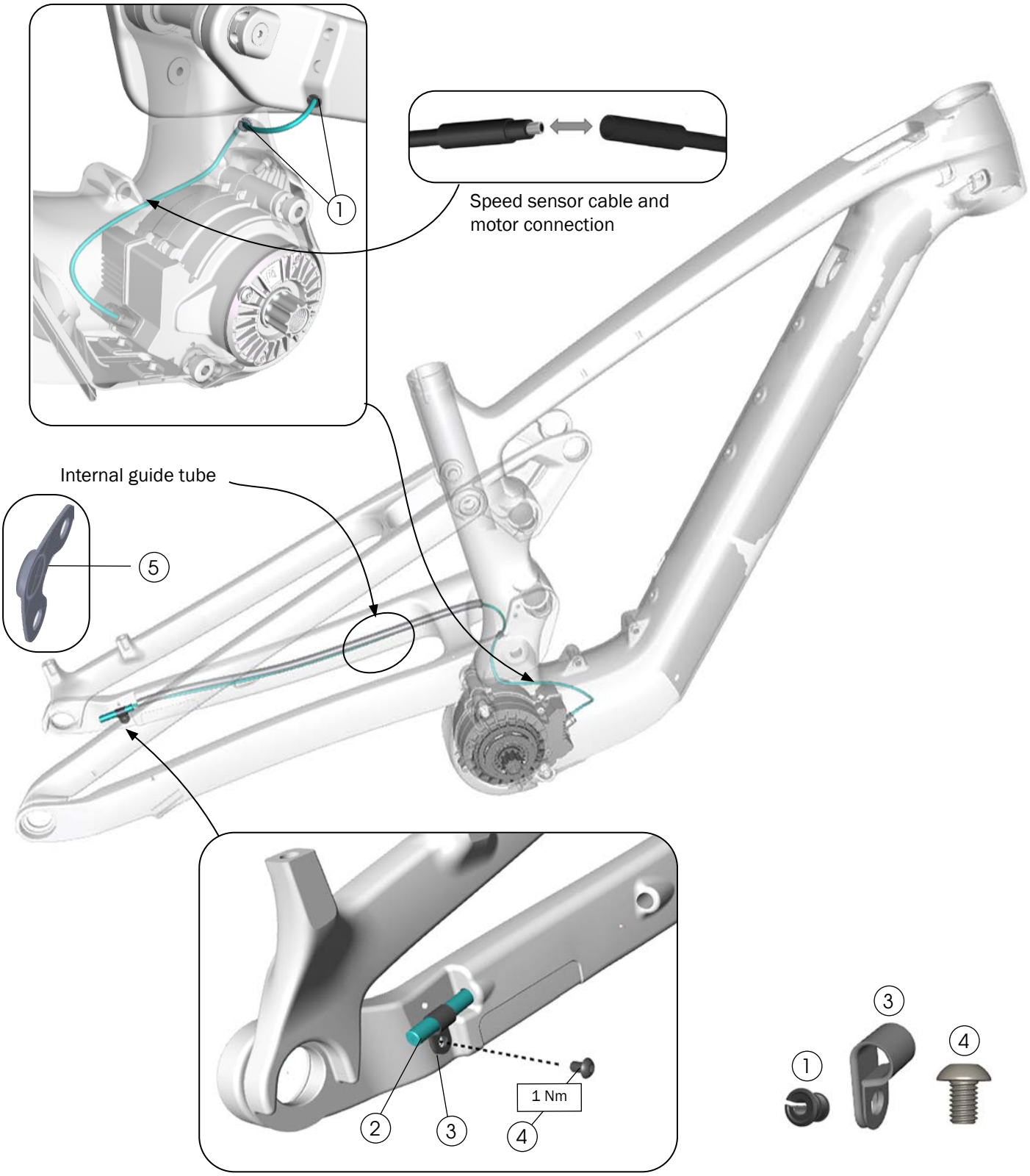

1. Frame plugs — W600208
2. Speed sensor cable — 5289567
3. Speed sensor clip — W5327061
4. Fastener, M4 x 6 mm — W575056
5. Magnet, attaches to brake rotor — 5289568

Display and remote

For AXS-equipped bikes, refer to the connection diagram in *AXS shift routing on page 11.*

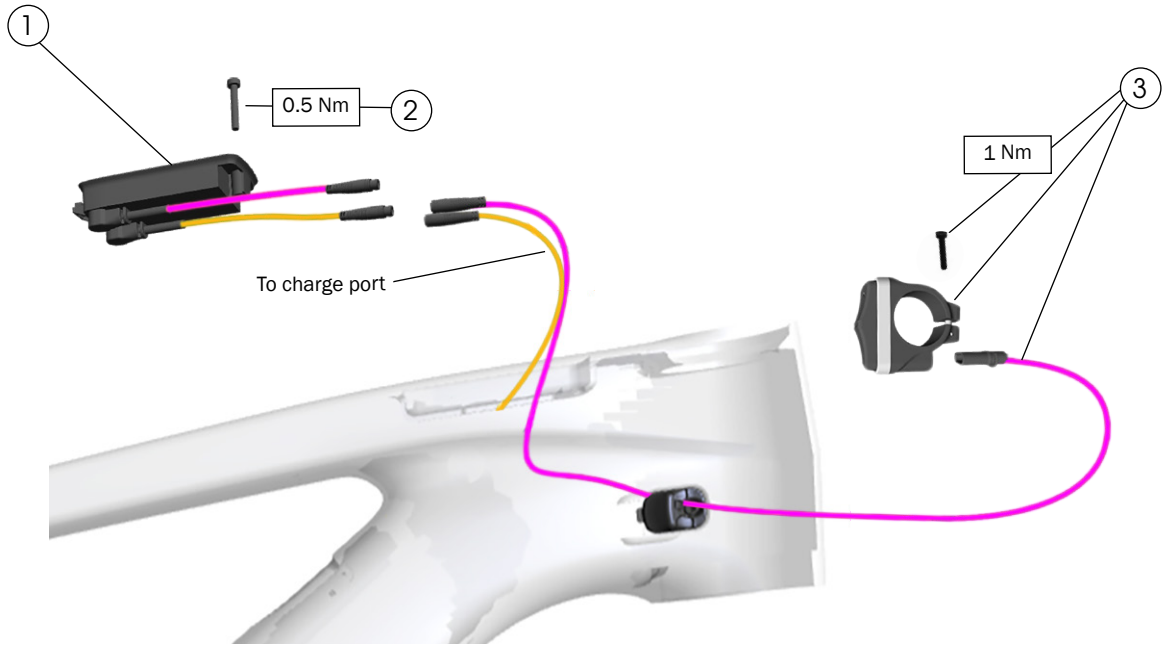

1. Display — 5289562
2. Fastener, M3 x 20 mm

5289562

3. Remote with fastener and cable — 5289561

Charge port cover

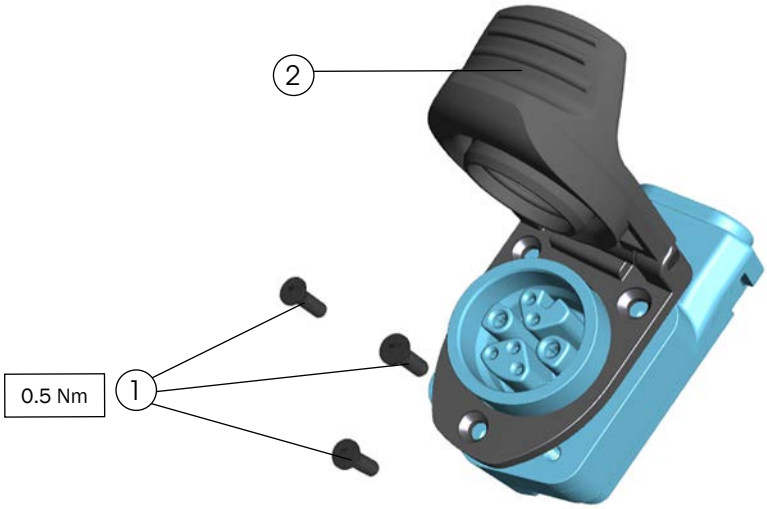

1 Fasteners, M2.5 x 8 mm
2 Charge port cover
— 5289578

Charge port locations

Tip: You can use the display opening in the top tube to hold the charge port in place while tightening the fasteners

M, L, XL size frames



S size frames



Main power cable, cable tray, and access panel

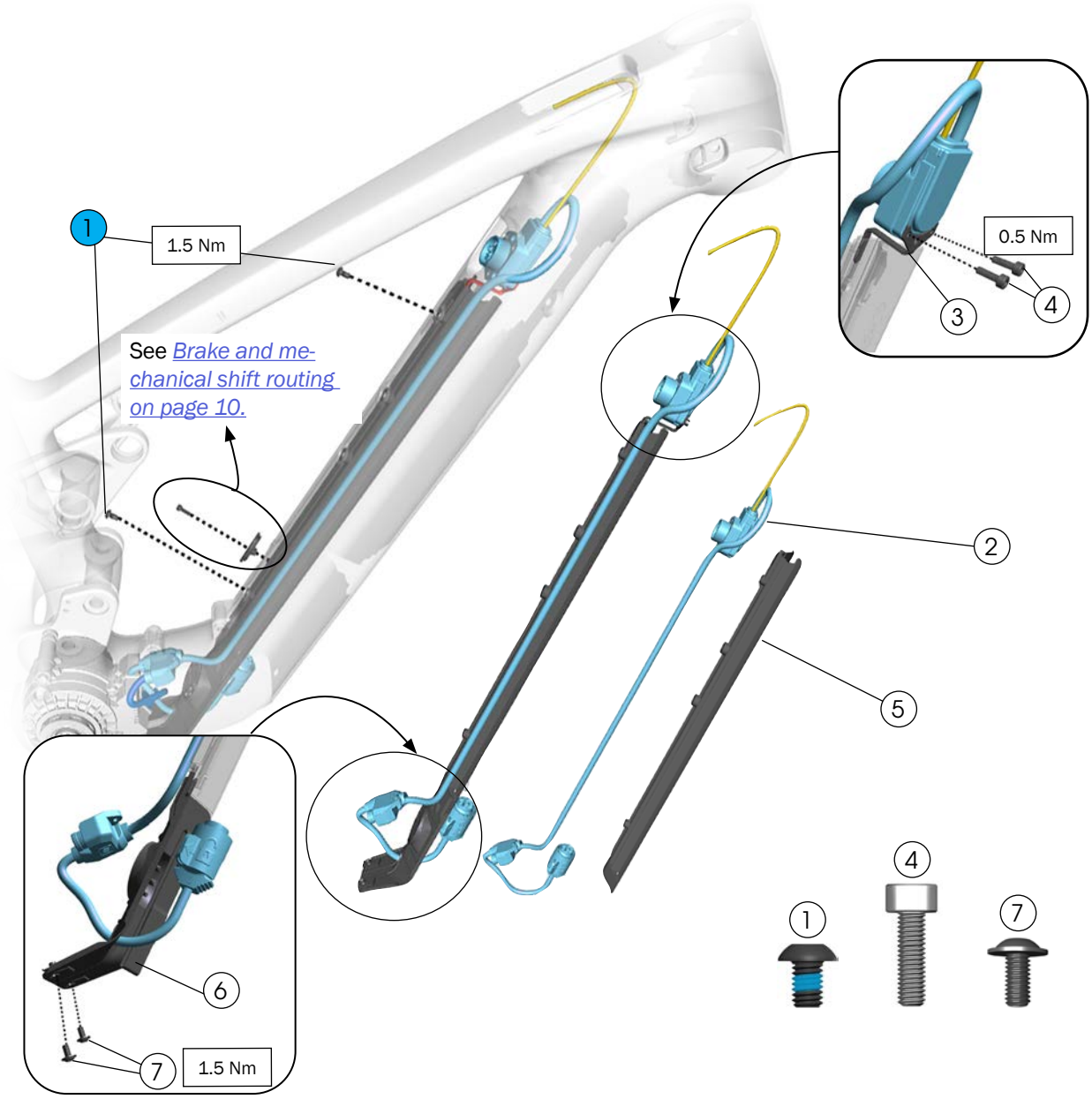

1. Fasteners, M4 x 8 mm — W5263894
2. Main power cable, kit includes charge port cover (See *Charge port cover on page 18)* — 5289573
3. Charge port assembly aid — W5333205
4. Fasteners, M3 x 10 mm — W545633
5. Cable tray — W5316279
6. Access panel — W5316280
7. Fasteners, M4 x 8 mm — 564136

Replace the cable tray

1. Slide the charge port assembly aid into the cable tray.

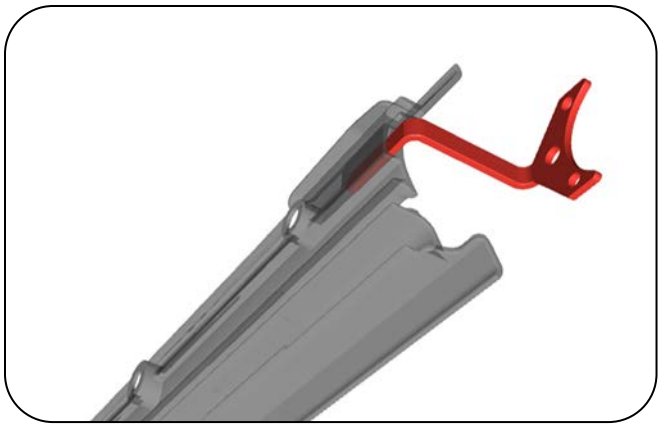

2. Attach the charge port to the cable tray and route the cable down the slot in the cable tray.

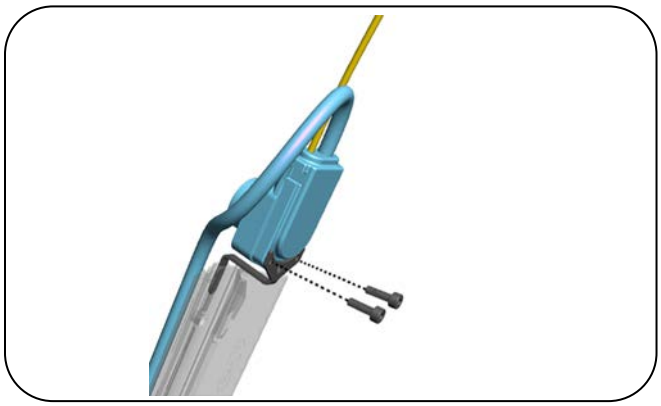

3. Insert the assembly thru the bottom of frame.

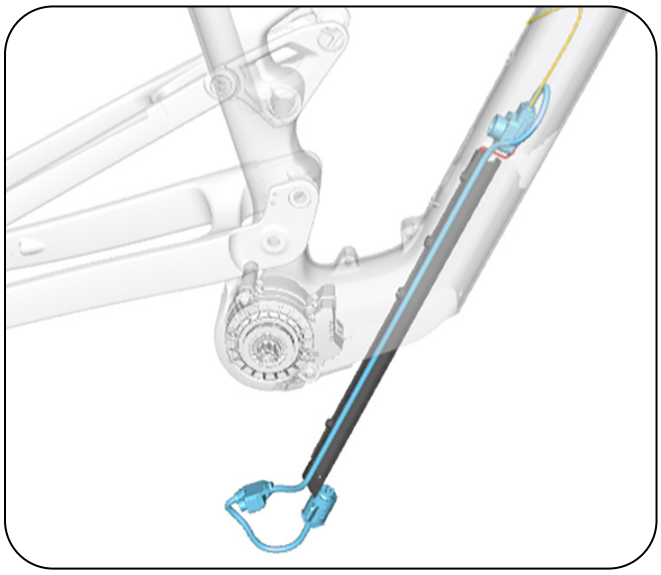

4. Insert the upper fastener.

   Tip: For M-XL frames, use a hex tool to hold the assembly in place.

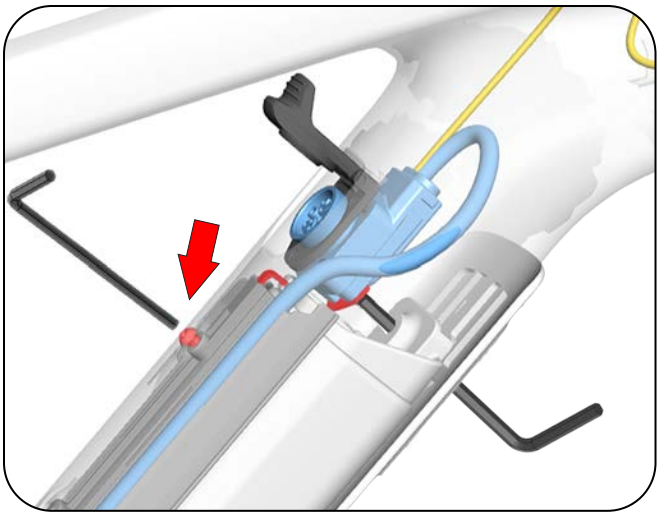

5. Insert the lower fastener.

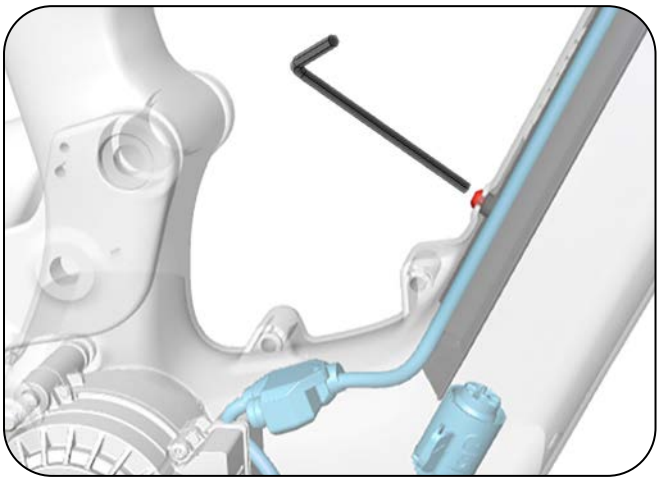

6. Plug in the motor cable and slide the access panel into the bottom of the cable tray.

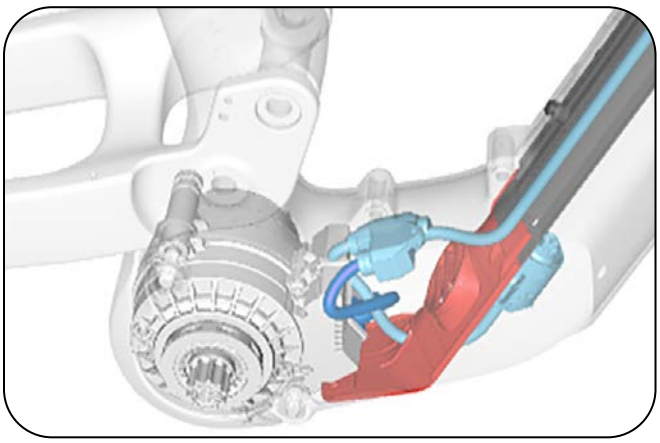

Battery





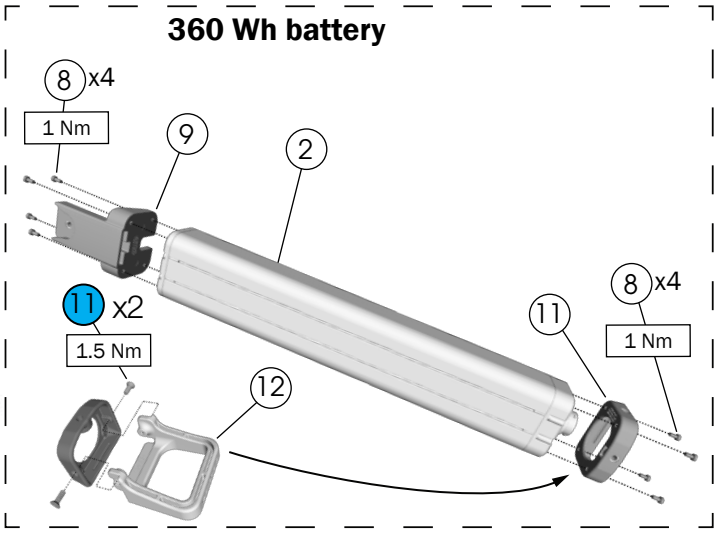

1. Battery, 580 Wh — W5317507
2. Battery, 360 Wh — 5289554
3. Fasteners, M6 x 16 mm — W5275266
4. Fasteners, M4 x 8 mm — W547053 
5. Battery end cap, upper — W5316285
6. Battery end cap, lower — W5316286
7. Battery cover — W5316277
8. Fasteners, M3 x 6 mm — W581747 
9. Battery adapter — W5316287
10. Battery end cap, lower — W5273187
11. Fasteners (M5 x 12 mm) 
12. Handle — *W5273188*

Ride the bike without the battery

Note: AXS wireless derailleurs are powered by the e-bike battery and will not work with the e-bike battery removed. To ride an AXS bike without the e-bike battery, a separate AXS derailleur battery is required.

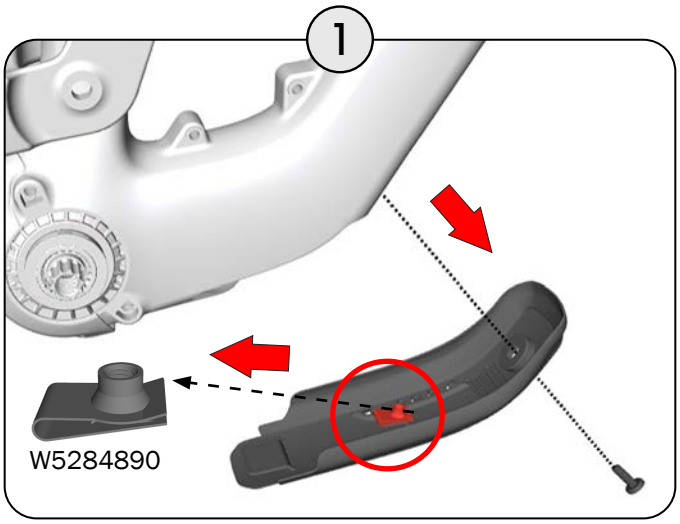

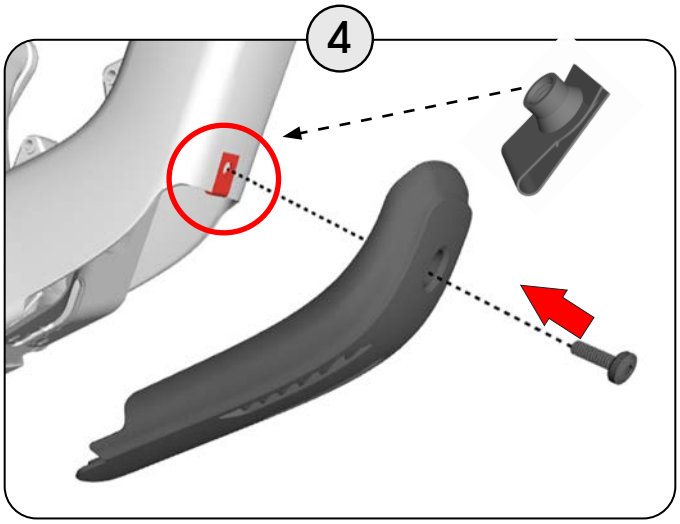

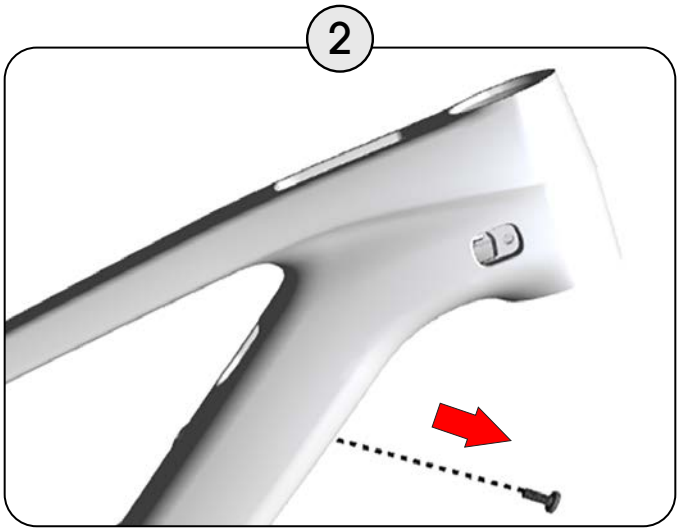

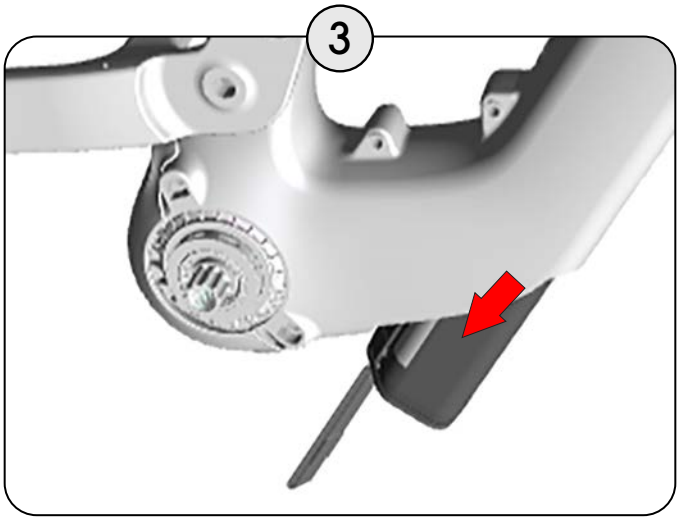

Motor connection, bolts, and cover

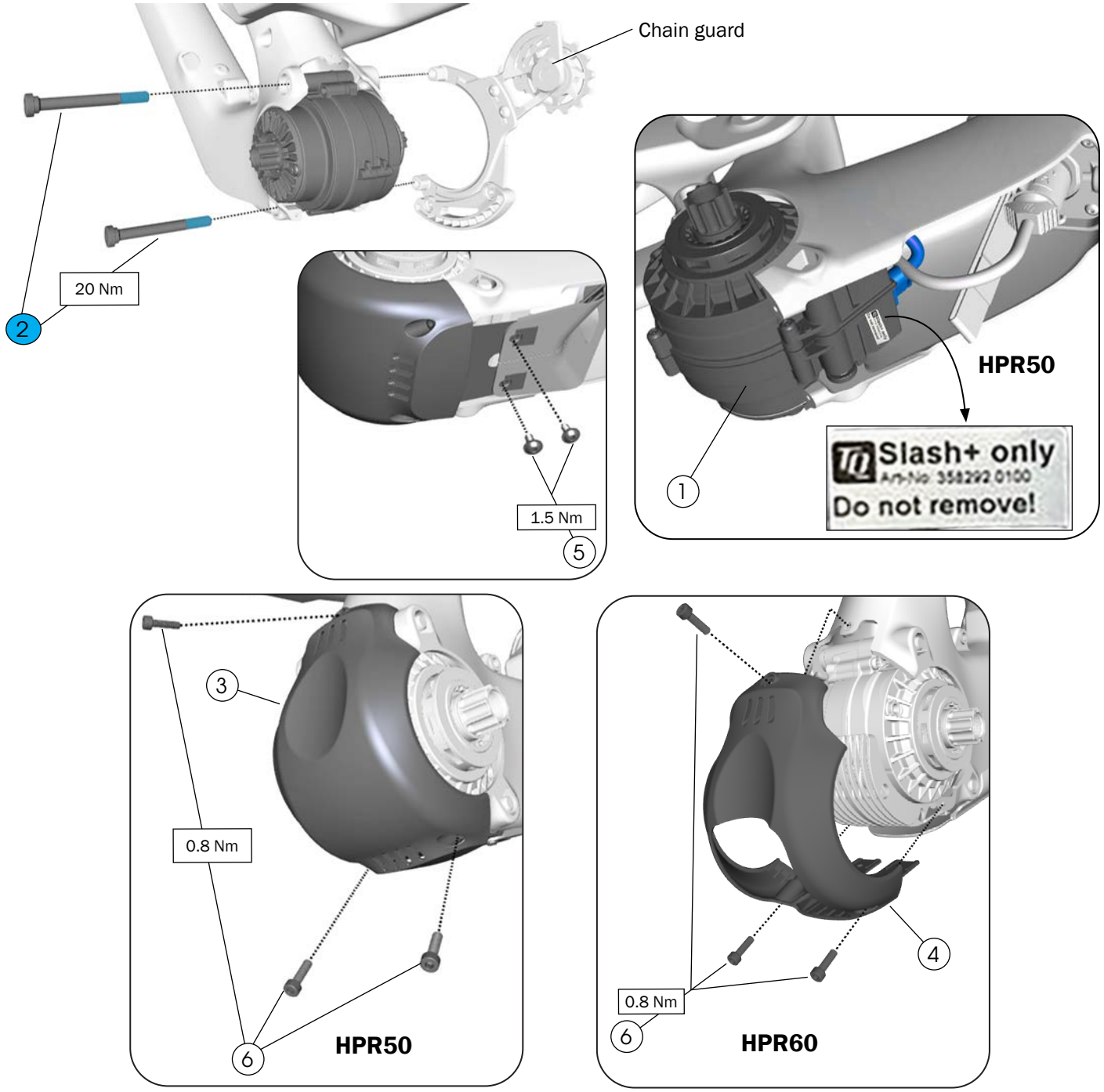

1 Motor
- HPR50 — 5328131
- HPR60 — 5343943

2 Motor bolts, M8 x 76.5 mm — 5289570

3 Motor cover, HPR50 — W5316275

4 Motor cover, HPR60 — W5334278

5 Fasteners, M4 x 8 mm — W547053

6 Fasteners, M4 x 14 mm

Motor lockring

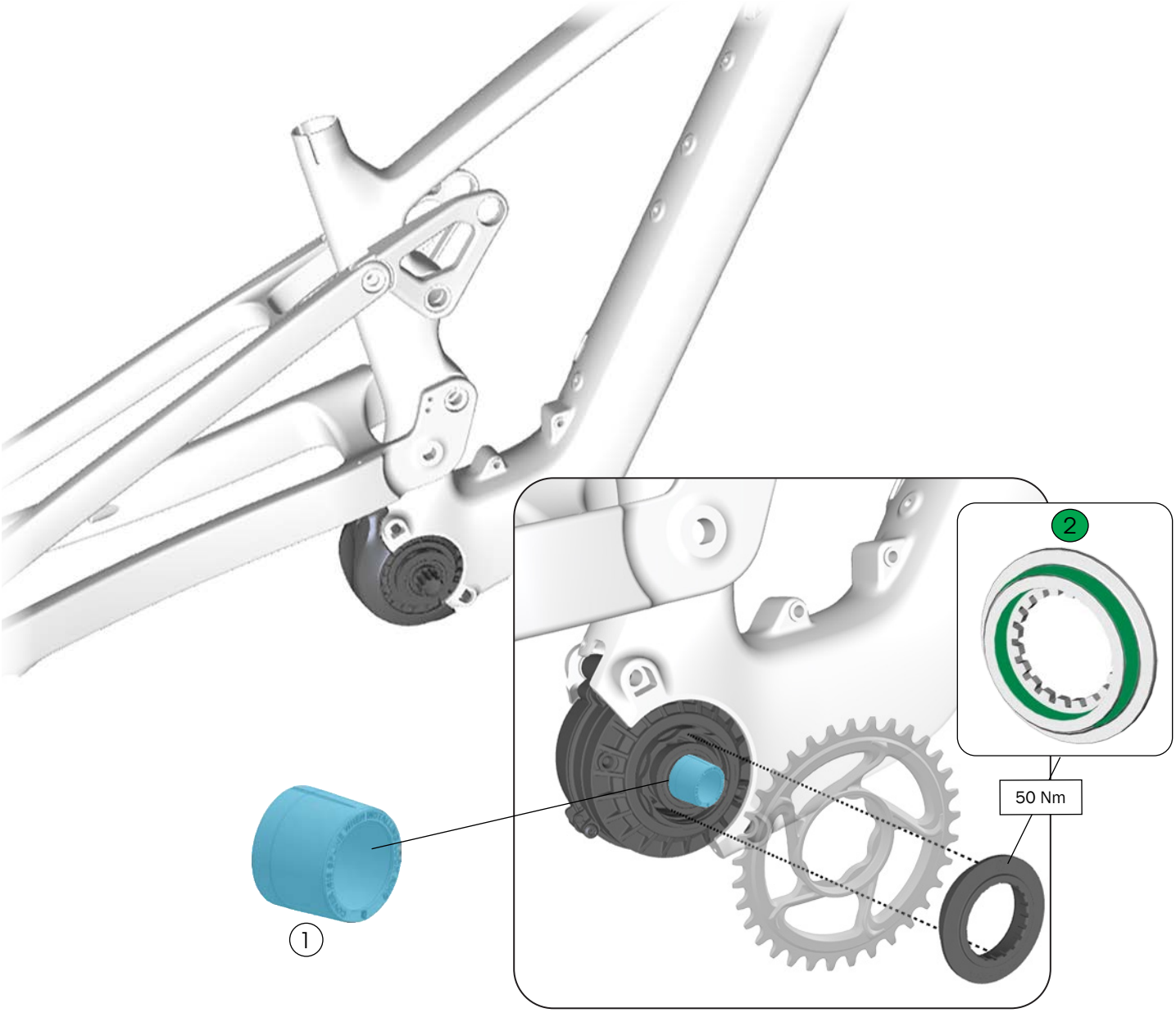

1 Protective sleeve

NOTICE: Before assembling the chainring and lockring, place the protective sleeve over the bottom bracket spindle. Failure to use the sleeve could damage the seal on the lockring and allow water to damage the motor. Remove after assembly.

2 Lockring

Apply grease to the shaft seal and o-ring of the lockring.

— 5309454

Tools

- BB-UN55 bottom bracket tool — part number 536183

Re-install the cranks

NOTE: A CWP-7 Crank Puller may be helpful to remove some types of crank arms.

The TQ system is designed for cranks to be installed in the UP position and in alignment with the notches on the spindle. Installing the cranks in a different position will cause the drive unit to run rough for a few hundred meters until the system re-learns the position of the cranks.

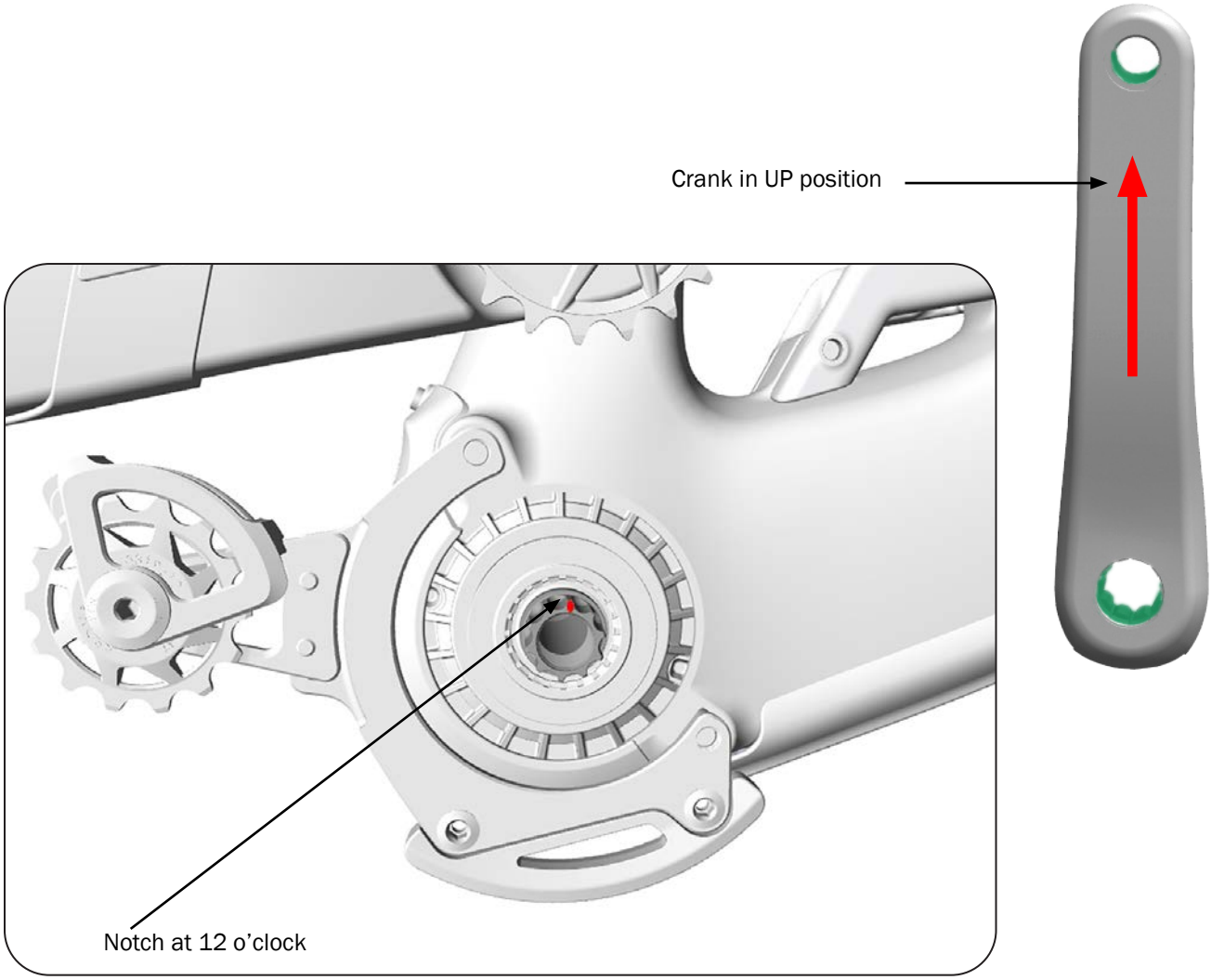

1. Locate the notch on the spindle. There are notches on the drive side and non-drive side.
2. Rotate the spindle until one notch is at the 12 o'clock position.
3. Install the corresponding crank in the up position.

Adjust the progression

The shock progression chip can be flipped to fine tune the shock performance for the terrain or rider preference.

20% Progression Softer

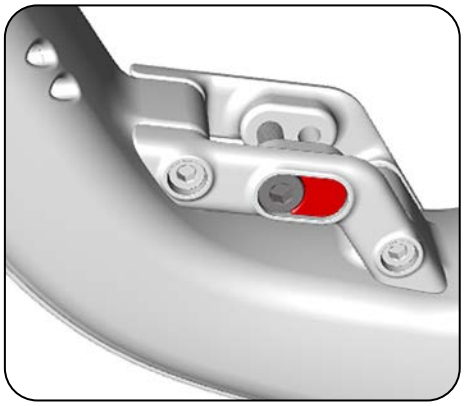

More reactive to repeated fast mid-size bumps and square-edge hits

25% Progression Firmer

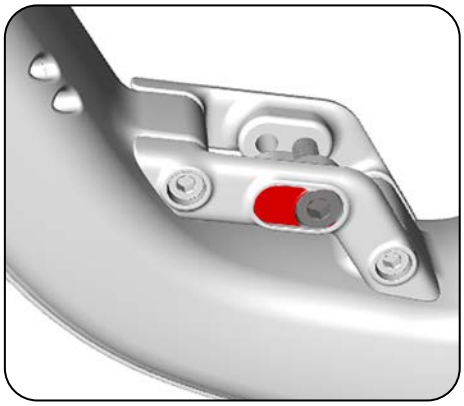

More bottom-out resistance over big hits and drops

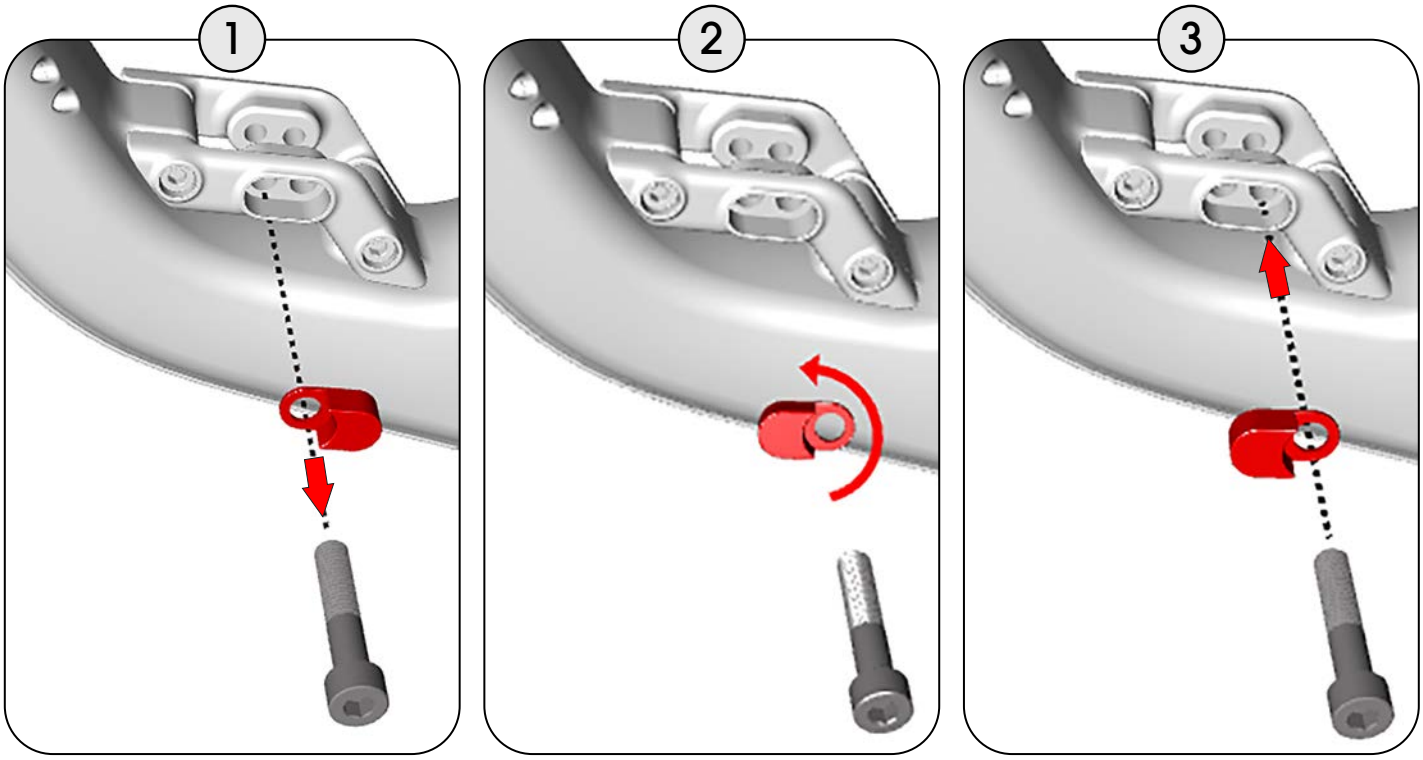

Connect lights to the TQ Smart Box

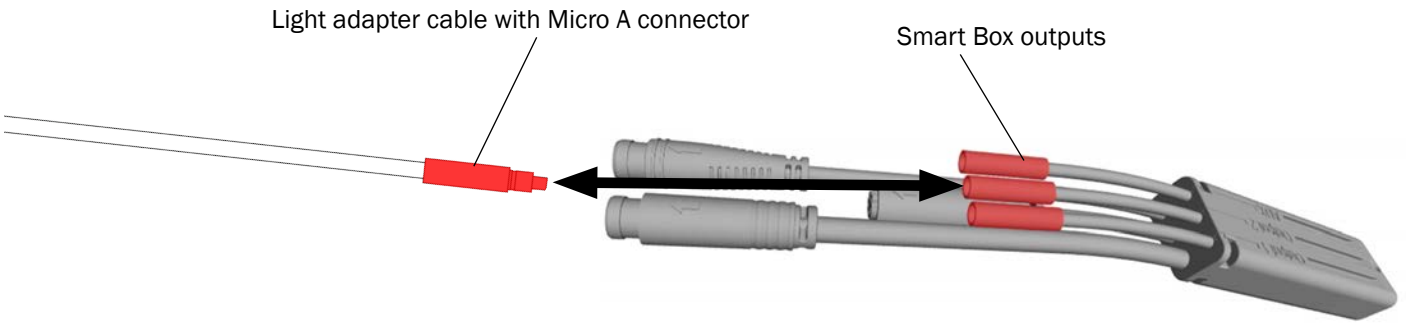

Lights can be connected to the TQ Smart Box and powered by the bike battery. The Smart Box power outputs must be activated via the Dealer Service Tool (bike shop use only).

For instructions on how to install the Smart Box, see *AXS shift routing on page 11* .

- **Maximum power (front and rear light combined):** 20W at 12V.
- **List of compatible lights:** refer to TQ's FAQ:
  - **English:** tq-ebike.com/en/support/faq
  - **German:** tq-ebike.com/de/support/faq
- **Required:**
  - A light adapter cable with a Micro A connector.
  - The Dealer Service Tool (shop use only) to activate the power output on the Smart Box.

Specifications

Chainline/Chainring

Chainline	Chainring	
	Minimum	Maximum
55	30T	34T round

Rear brake mount

200 mm direct post mount, adaptable to 220 mm

NOTICE: To use a 203 mm rotor, RockShox 1.5mm brake adapter spacers are required. — W5252574

Rear O.L.D

148 mm

Maximum tire size

Front: 29" x 2.5"

Rear: 27" x 2.5"

NOTICE: Measurements of actual tires may vary. Always verify there is sufficient clearance between the tire and the frame. Improper tire size could damage the bicycle frame. Trek recommends 6 mm clearance above and on both sides of the tire.

Fork

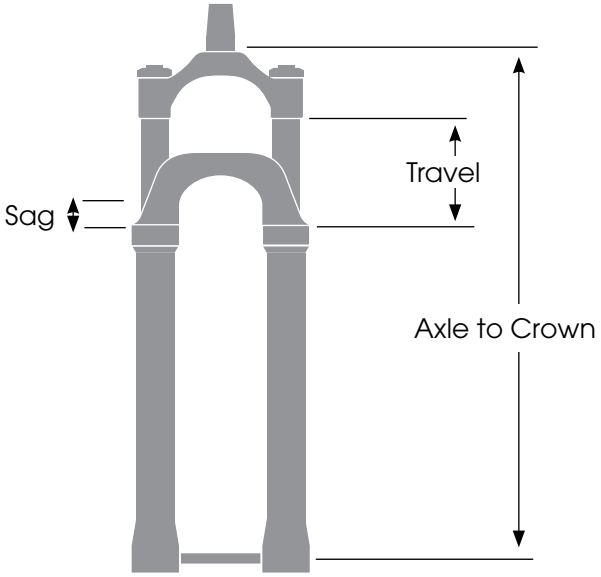

Frame size	Axle to Race (mm)		Travel
S	Recommended	566	170
	Maximum	587	190
M, L, XL	Recommended	586	170
	Maximum	606	190

Recommended sag: Refer to the suspension calculator at *Trekbikes.com/suspension-calculator.*

Seatpost

WARNING

Always follow the seatpost manufacturer's minimum insertion recommendation. Failure to follow the recommendation could cause damage to the seatpost and result in injury to the rider.

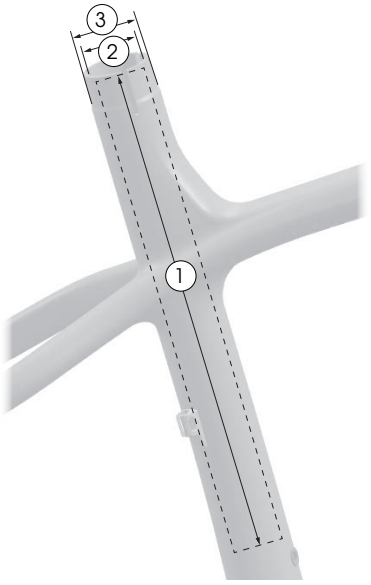

Minimum insertion: Refer to seatpost manufacturer.

1	**Maximum insertion**	**Carbon**
	Small:	290 mm
	Medium:	275 mm
	Large:	285 mm
	Extra large:	325 mm

2 **Seat tube inside diameter:** 34.9 mm

3 **Seat tube post-clamp outer diameter:** 39.5 mm