TREK

Product Support

MY21 Slash Parts Quick Reference

SLASH

Product Support

MY21 Slash Parts Quick Reference

Item	Description	Part Number	Qty	Note
1	Storage Door Assembly	W583862	1	Cage Not Included
2	Upper Downtube Armor	W600583	1	Carbon S/M/ML
		W1043493		Carbon L/XL
		W601114		Alloy All Sizes
3	Lower Downtube Armor	W601115	1	Alloy All Sizes
		W600584		Carbon All Sizes
4	Chainstay Guard	W600585	1	Carbon
		W601116	1	Alloy
5	M4x6mm Bolts	1042535	6	
6	Rotor Scuff Guard	W580881	1	
7	Seatstay Guard	W600587	1	
8	Thru Shaft Grommet	W602227	1	Carbon Frames Only

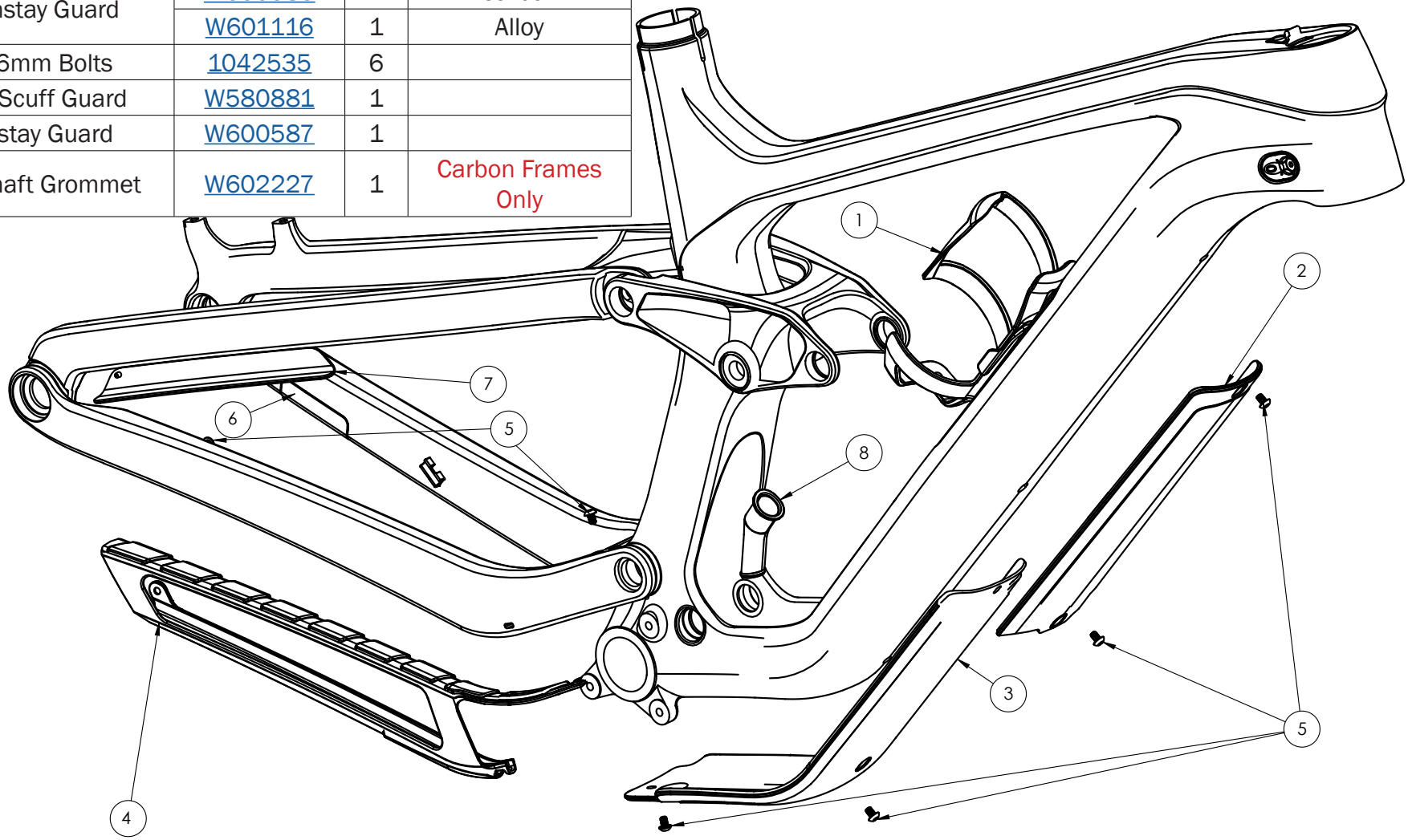

Product Support

MY21 Slash Parts Quick Reference

Thru Shaft

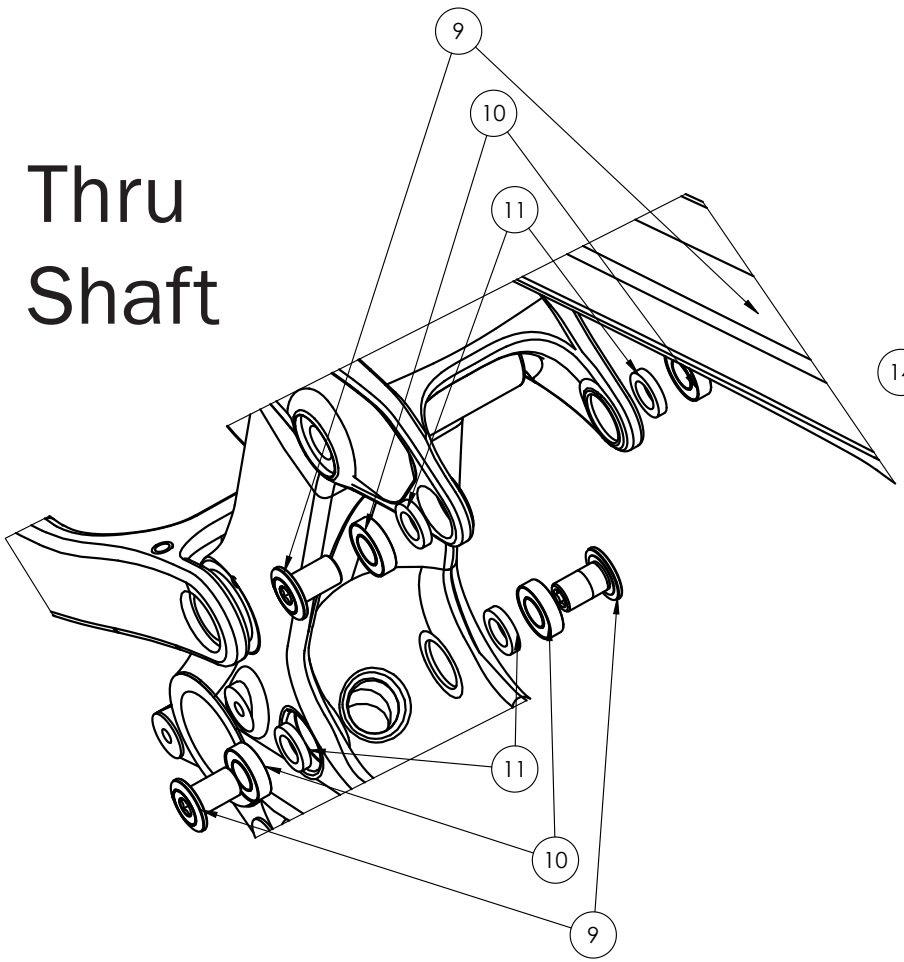

Item	Description	Part Number	Qty	Note
9	Thru Shaft Bolt	W600630	4	
10	Shock Bearing	W293466	4	
11	Shock Spacer	W529969	4	

Standard Eyelet

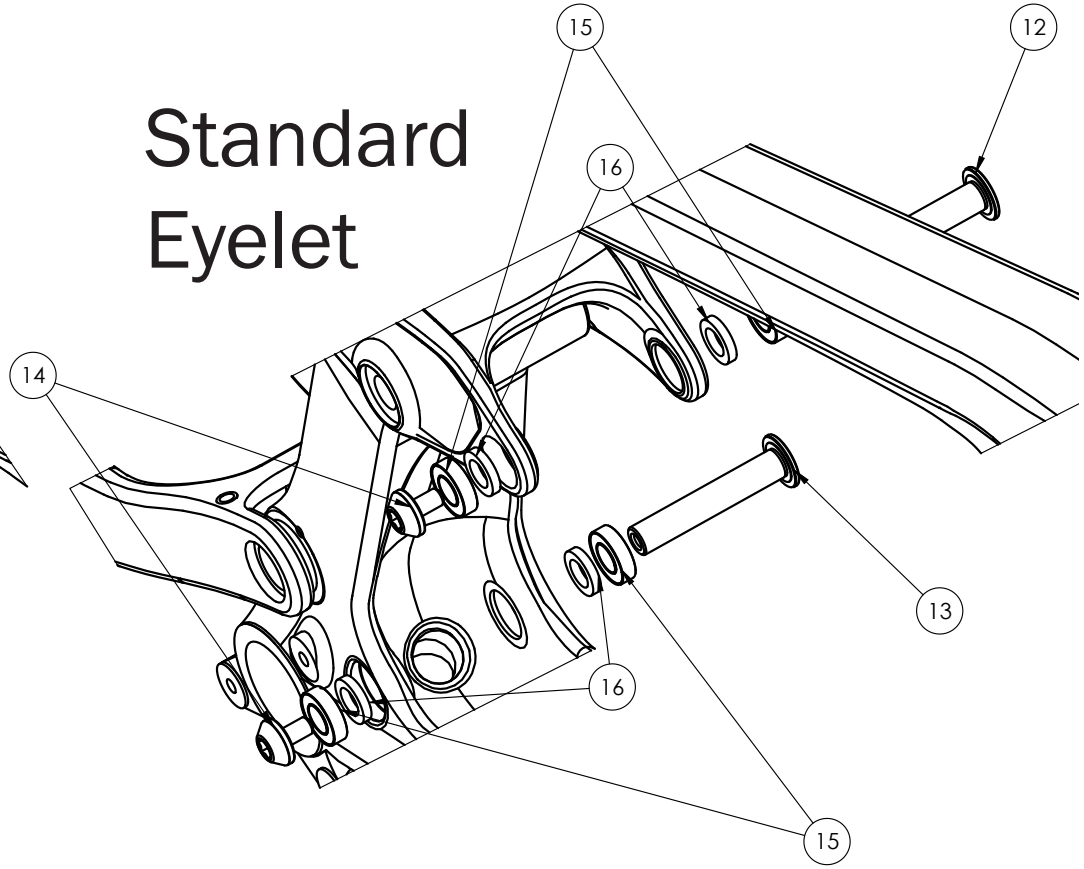

Item	Description	Part Number	Qty	Note
12	Upper Shock Axle	599898	1	
13	Lower Shock Axle	5258210	1	
14	Shock Axle Endcap	n/a	2	Included w/ Axles
15	Shock Bearing	W293466	4	
16	Shock Spacer	W529969	4	

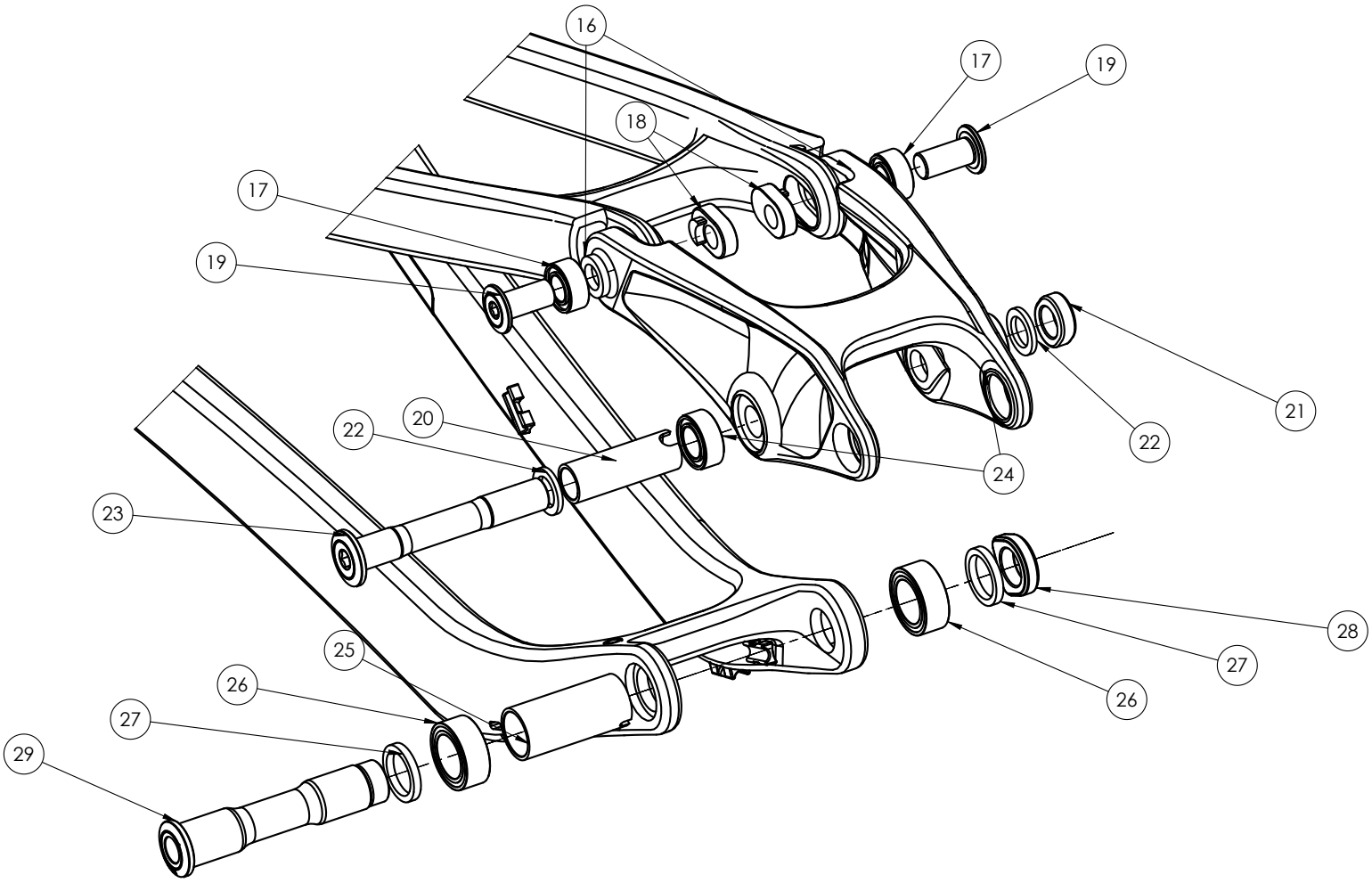

Item	Description	Part Number	Qty	Note
16	Spacer, 16x10x3mm	W529969	2	
17	Rocker:Seatstay Bearing	W529224	2	
18	Mino Link Nut	W529223	2	
19	Mino Link Bolt	W600629	2	17Nm
20	Rocker Pivot Sleeve	W310155	1	
21	Rocker Pivot Nut	W311582	1	
22	Spacer, 18x12x2mm	W290057	2	
23	Rocker Pivot Bolt	W600627	1	22Nm
24	Rocker:Frame Bearing	W586543	2	
25	Main Pivot Spacer	W600642	1	
26	Main Pivot Bearing	W302025	2	
27	Spacer, 22x17x3mm	W440921	2	
28	Main Pivot D-Nut	W584134	1	
29	Main Pivot Bolt	W600628	1	30Nm

Product Support

MY21 Slash Parts Quick Reference

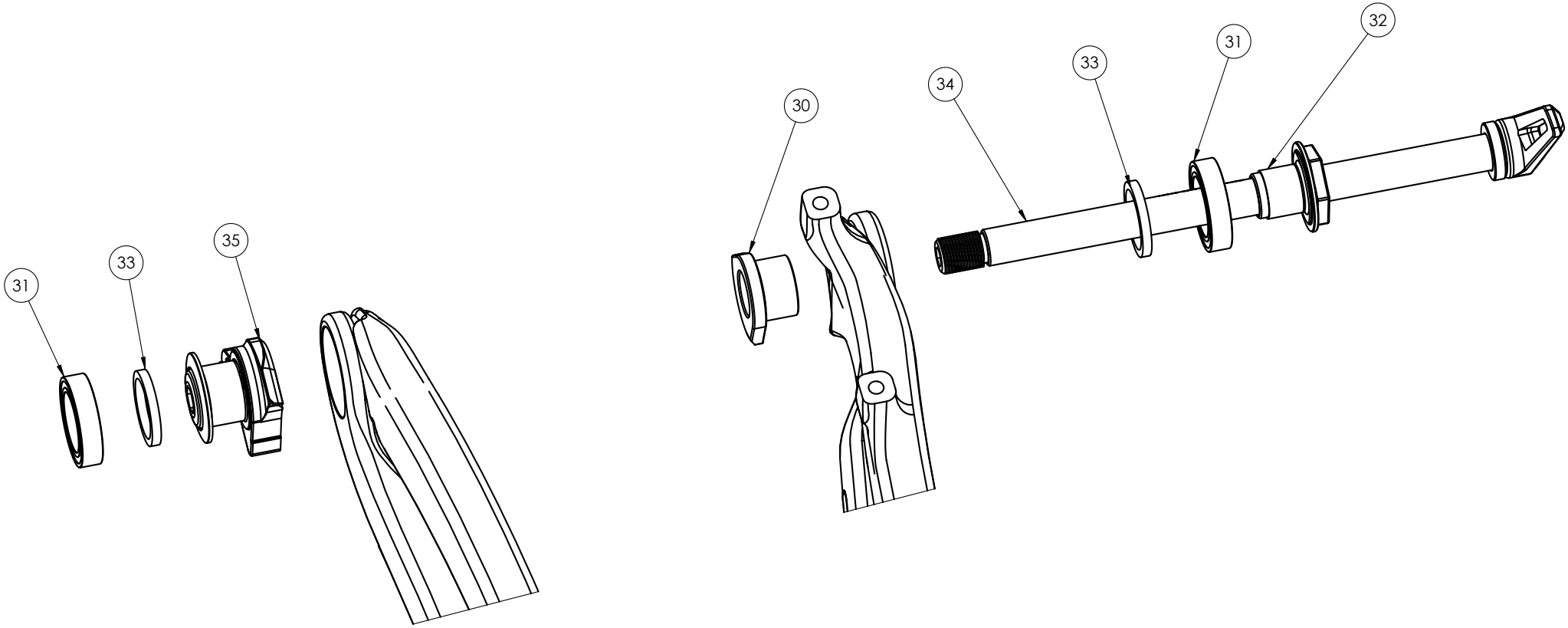

Item	Description	Part Number	Qty	Note
30	ABP NDS Nut	W583419	1	
31	ABP Bearing	W583424	2	
32	ABP Bolt	W583420	1	
33	ABP Spacer	W583422	2	Carbon Frames Only
34	Thru Axle 12x184.5mm M12	W583469	1	Torque 10Nm
35	ABP Universal Hanger	W583423	1	Torque 25Nm, LH

TREK

Product Support

MY21 Slash Parts Quick Reference

Item	Description	Part Number	Qty	Note
36	M4x16mm Bolt	W532763	4	
37	67° Knockblock Assembly	5252161	1	
38	Seattube Housing Grommet	W583807	1	
39	Housing Grommet Cinch			
40	Control Freak Cable Guide	W519232	2	

CABLE ROUTING

CABLE	COLOR
REAR SHIFTER	RED
REAR BRAKE	BLUE
DROPPER POST	WHITE

