

ROSCOE GEN 4

SERVICE MANUAL

Contents

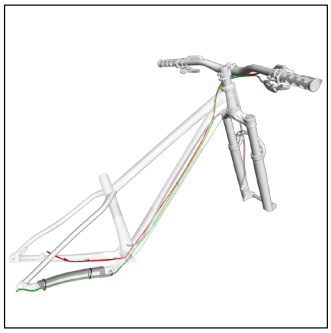

Routing — brake and shift



Routing — dropper seatpost

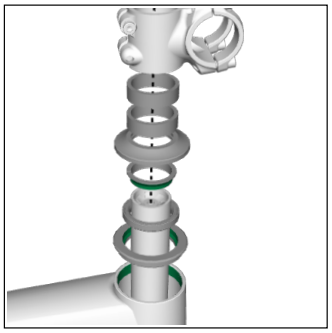

Headset

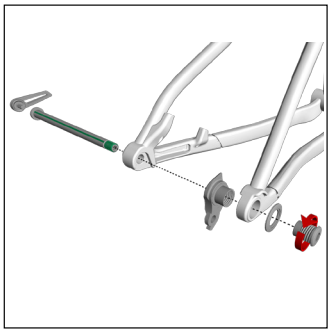

Rear axle

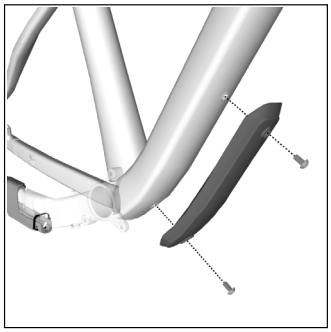

Guards

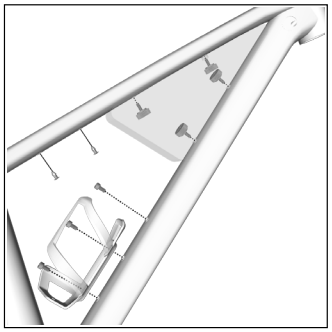

Frame mounts and bags

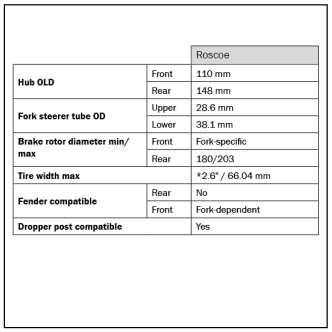

		Roscoe
Hub OLD	Front	110 mm
	Rear	148 mm
Fork steerer tube OD	Upper	28.6 mm
	Lower	38.1 mm
Brake rotor diameter min/max	Front	Fork-specific
	Rear	180/203
Tire width max		*2.6" / 66.04 mm
Fender compatible	Rear	No
	Front	Fork-dependent
Dropper post compatible		Yes

Specifications

Copyright 2025 Trek Bicycle Corporation All Rights Reserved

About this manual

Scope

This manual contains parts diagrams, specifications (such as grease and torque values), instructions, part numbers, and helpful tips. It does not contain instructions for all components (such as brake calipers). Refer to the original manufacturer for more information.

Replacement parts

Trek recommends using only Trek OEM (original manufacturer) replacement parts.

Additional info

Additional manuals are available at Trekbikes.com/manuals.

Inspect the bike

Please inspect the bicycle carefully after removal from the box and all packaging:

- Inspect all surfaces of the bicycle for damage, pay special attention to the fork legs and the seat stays (both inside and outside surfaces).
- If packaging damage is located near the front of the bicycle, remove the fork from the frame and inspect the steerer tube for damage.

Legend


Cable (zip) tie

Nm Torque value

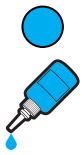
Apply appropriate threadlocker


Apply Bontrager grease

Safety

WARNING

Properly tighten hardware

Always tighten hardware to the specified torque. Over-tightening hardware could deform or break the hardware or components. Under-tightening or over-tightening hardware could cause hardware or components to become loose. Either situation could damage the bicycle and result in injury to the rider.

WARNING

Reapply threadlocker

All reused-fasteners with pre-applied threadlocker must be cleaned with isopropyl alcohol and have new threadlocker applied before re-assembly. If threadlocker is not applied, the fasteners may loosen which could damage the bicycle and result in injury to the rider.

3D interactive graphics

Click the icon in this manual to view interactive models.

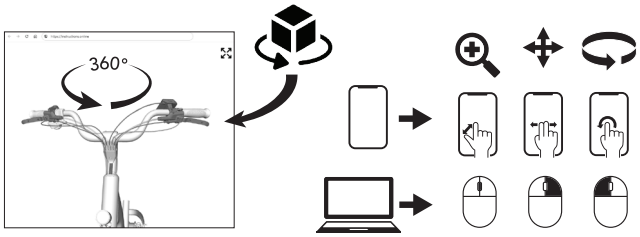

We value your feedback

We hope you find our service manual useful. To help us improve, please take a brief survey about your experience. We periodically update our manuals and your input ensures we provide the highest quality user experience.



For product help or inquiries:

Please visit trekbikes.com/contactus or call Customer Care.

Routing — brake and shift

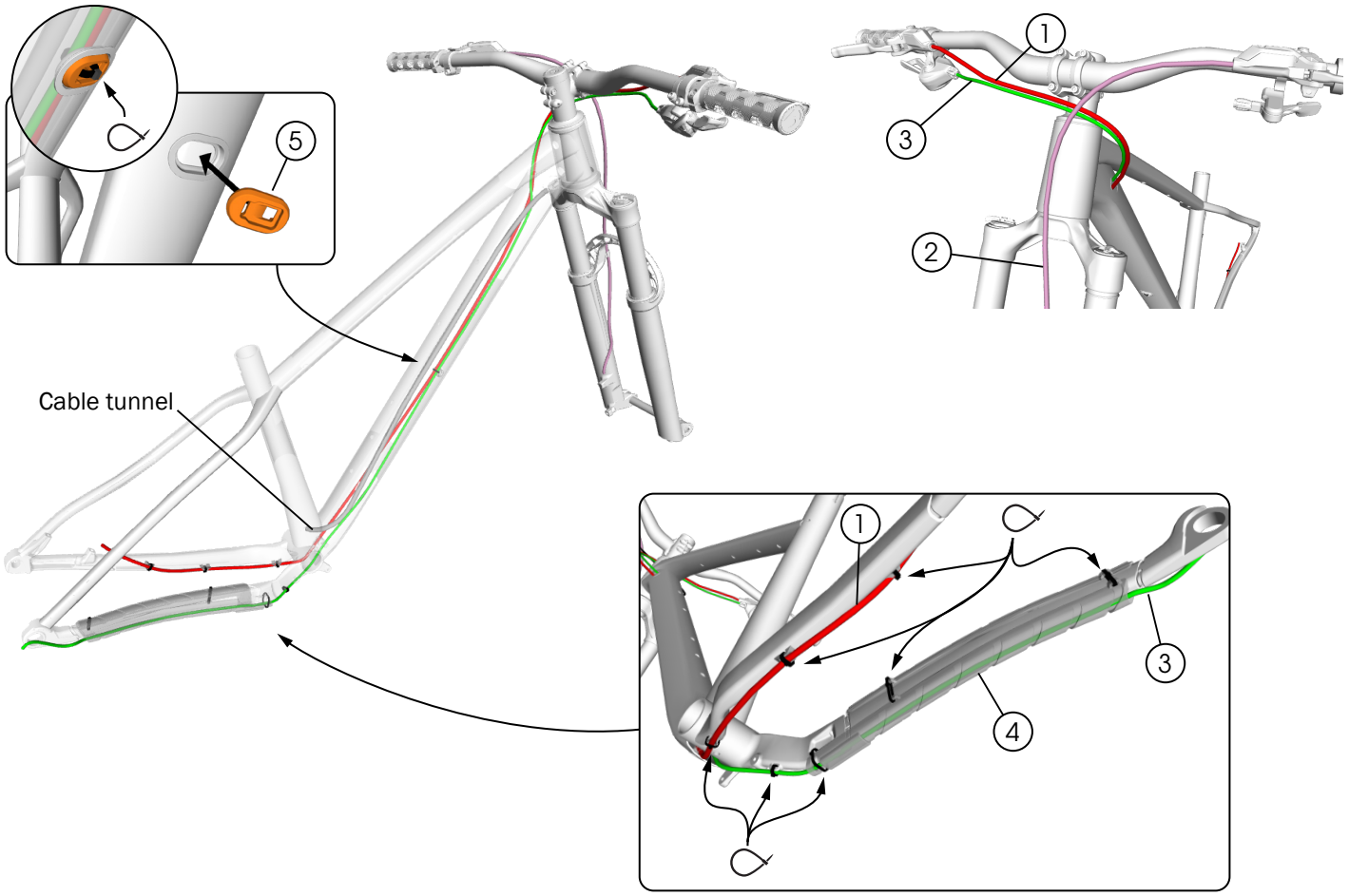

1. Rear brake hose
2. Front brake hose
3. Rear derailleur cable
4. Chainstay guard — *5252847*
5. Cable guide — *W513977*

Install cable guide

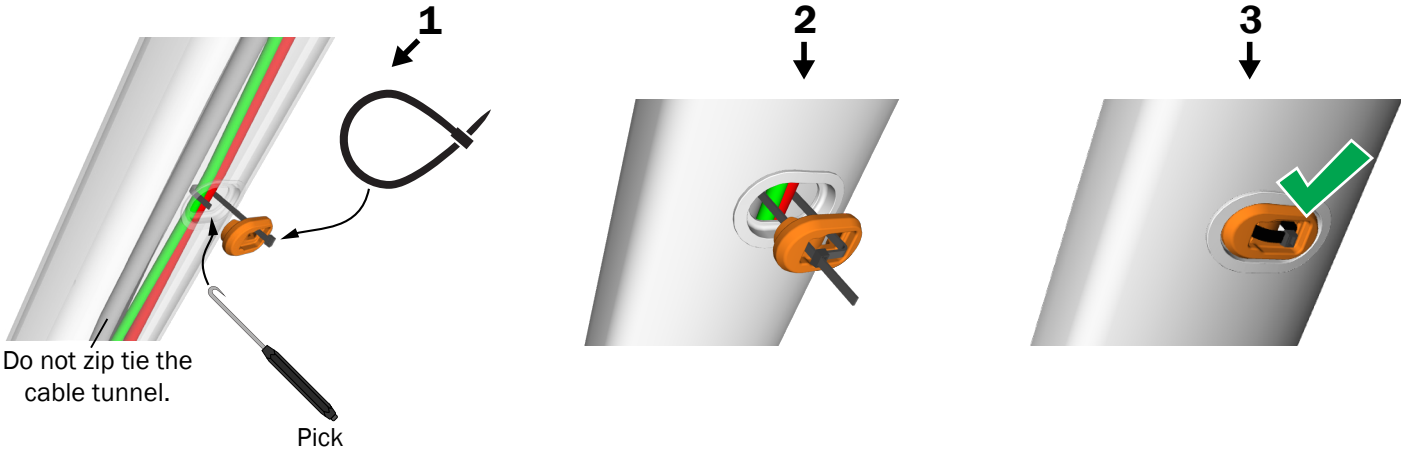

Routing — dropper seatpost

NOTE: Some early-production bikes do not have a cable tunnel.

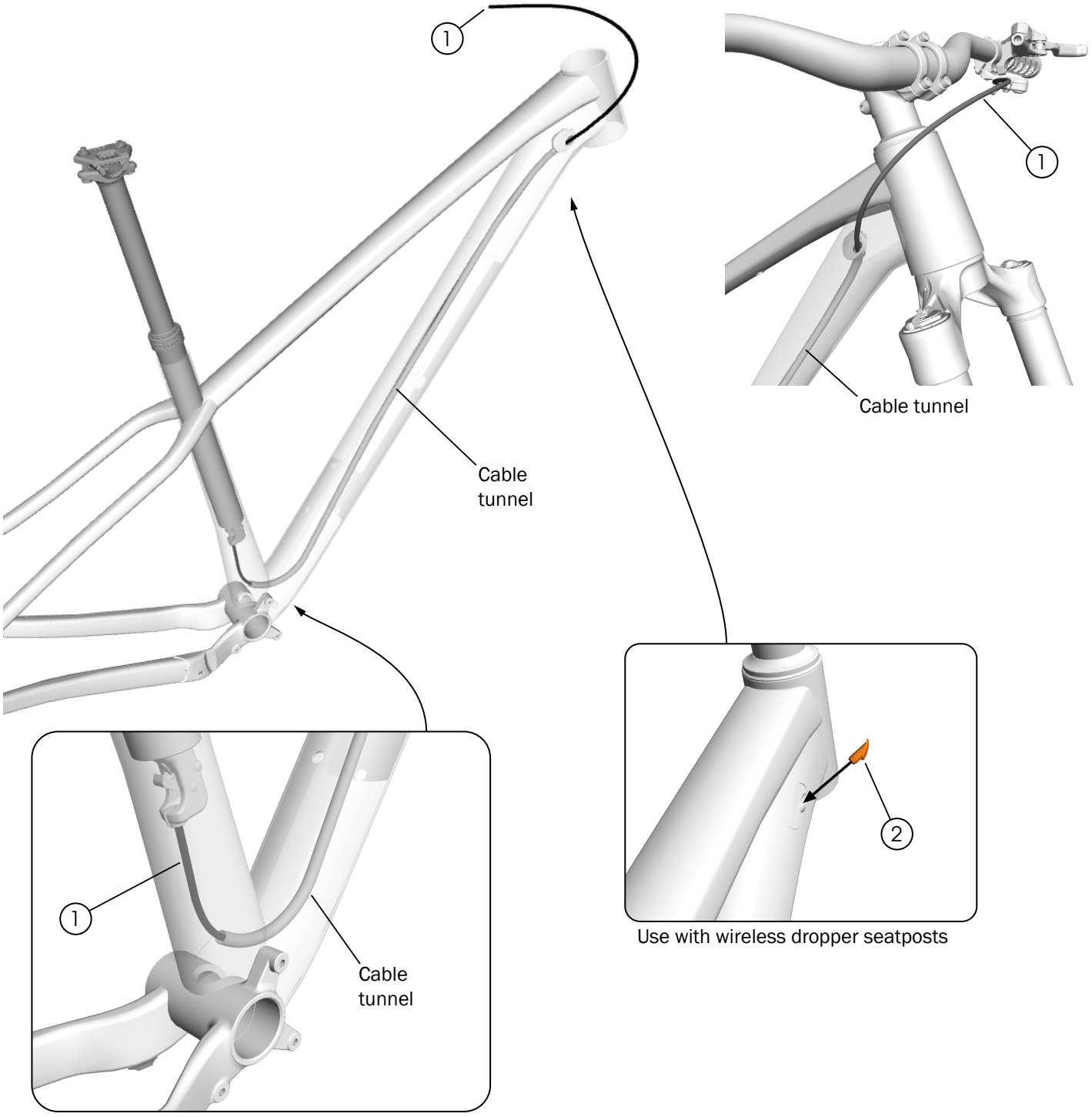

1. Dropper post cable
2. Plug — *600649*

Headset

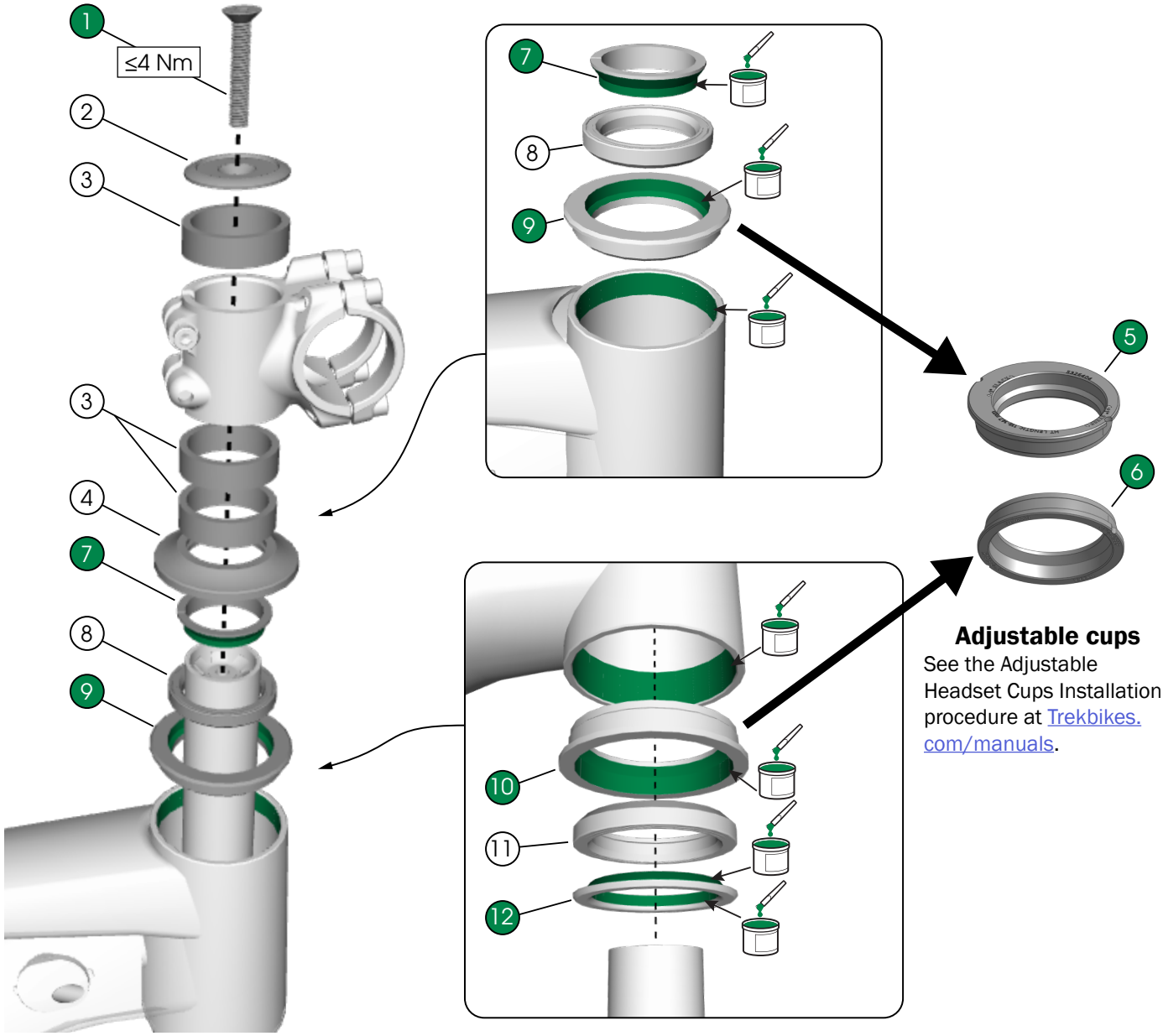

Adjustable cups
See the Adjustable Headset Cups Installation procedure at Trekbikes.com/manuals.

1. Fastener (M6 x 35 mm)
2. Top cap
3. Spacers (10 mm)
4. Bearing cover, upper — *W5275173*

   4 — *W547432*
5. Bearing cup, upper (+/– °1)
   - 90-117 mm — *5326405*
   - 118-147 mm — *5326404*
   - 148-175 mm — *5326406*
6. Bearing cup, lower (+/– °1) — *5326404*
7. Compression ring — *W532842*
8. Bearing, upper — *W531676*
9. Bearing cup, upper — *W5304949*
10. Bearing cup, lower — *W5304949*
11. Bearing, lower — *W532843*
12. Crown race — *W532844*

   7–12 — *W5285212*

Rear axle

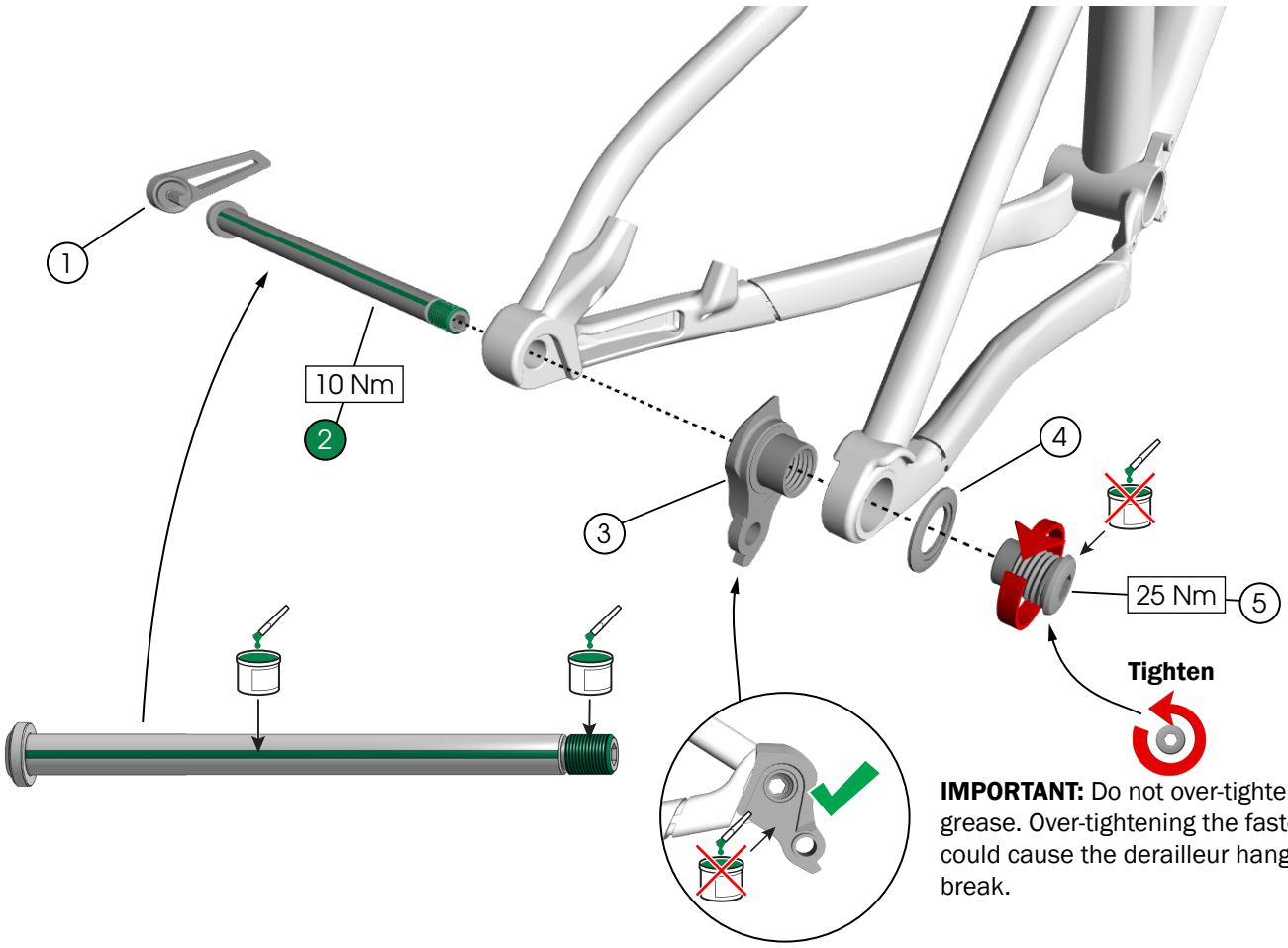

IMPORTANT: Do not over-tighten or grease. Over-tightening the fastener could cause the derailleur hanger to break.

1. Switch lever (black) — **W5312899*
2. Axle (M12 x 180 mm) — *W5290786*
3. Derailleur hanger
4. Washer (30 mm)
5. Fastener

**Color matched part — see Trekbikes.com for full product list*

Guards

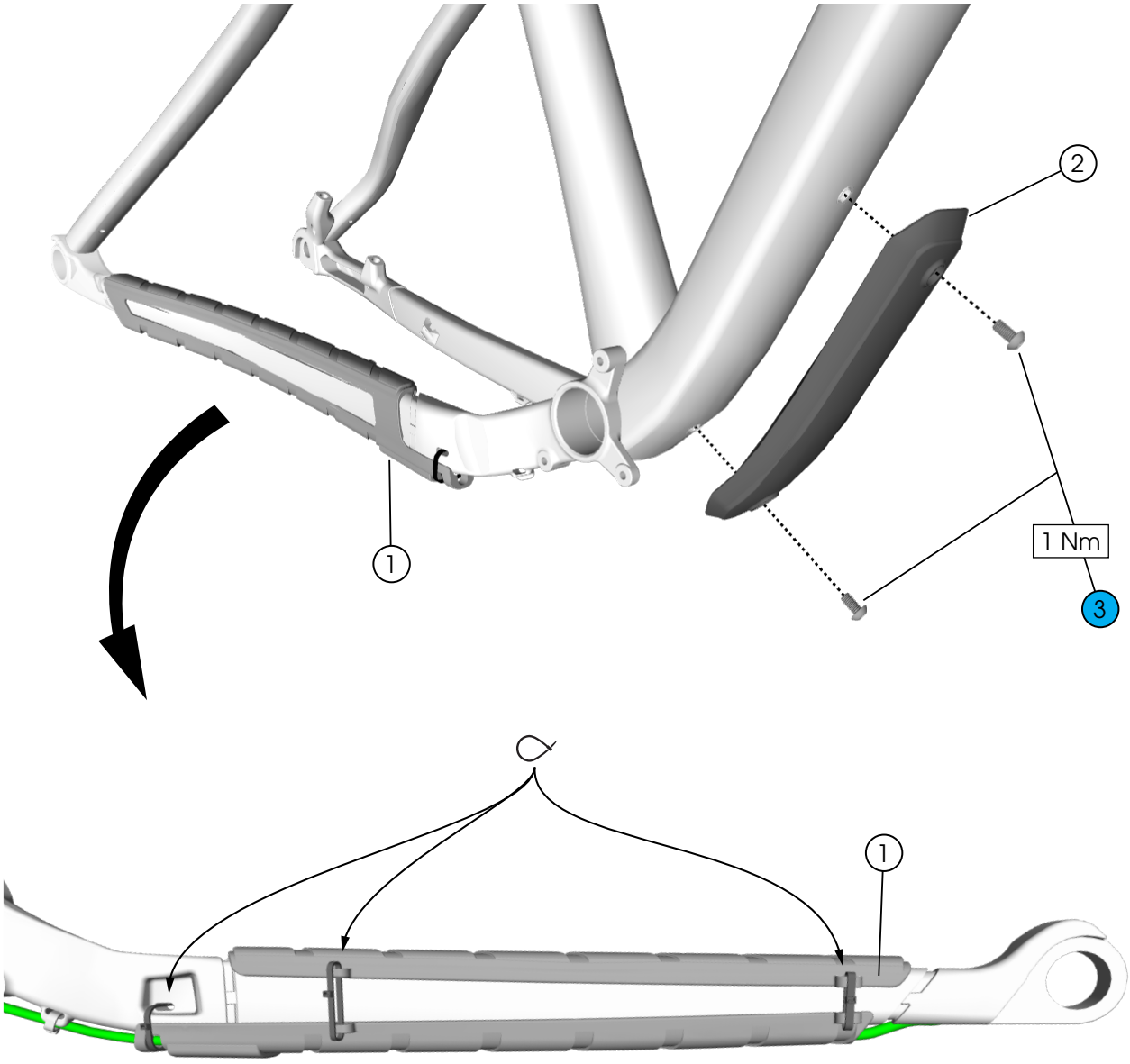

1. Chainstay guard — *5332532*
2. Down tube guard — *W5331332*
3. Fasteners (M5 x 10 mm) — *5319620* 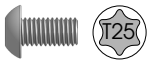

Frame mounts and bags

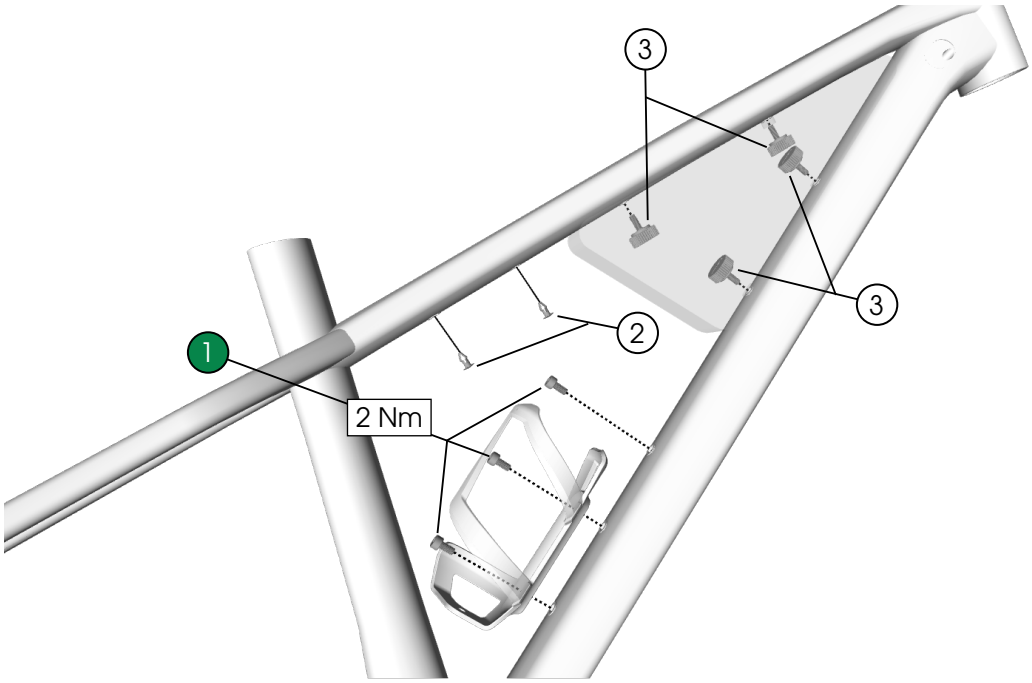

The charts below show the largest bottles you can fit on each frame size with the bag installed.

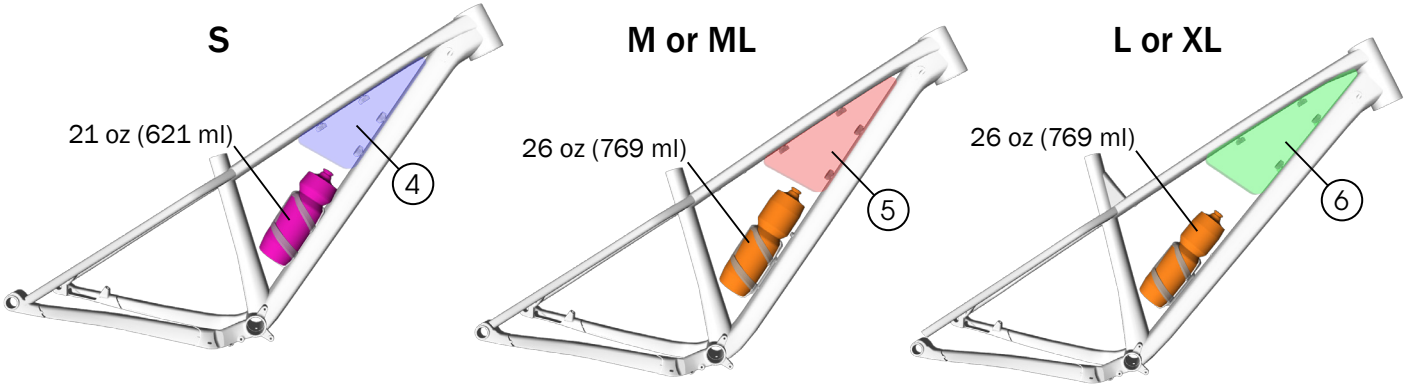

1. Fasteners (M5 x 10 mm)
2. Plugs
3. Thumb screws — *5324792*
4. Frame bag, S — *5335833*
5. Frame bag, M — *5335834*
6. Frame bag, L — *5335835*

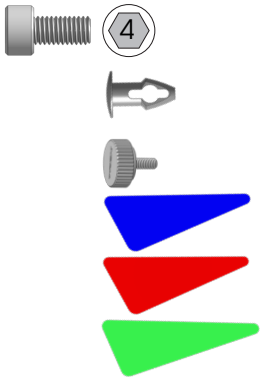

Specifications

Frame

		Roscoe
Hub OLD	Front	110 mm
	Rear	148 mm
Fork steerer tube OD	Upper	28.6 mm
	Lower	38.1 mm
Brake rotor diameter min/ max	Front	Fork-specific
	Rear	180/203
Tire width max		*2.6" / 66.04 mm
Fender compatible	Rear	No
	Front	Fork-dependent
Dropper post compatible		Yes

**Tire width measured when seated on rim.*

Fork

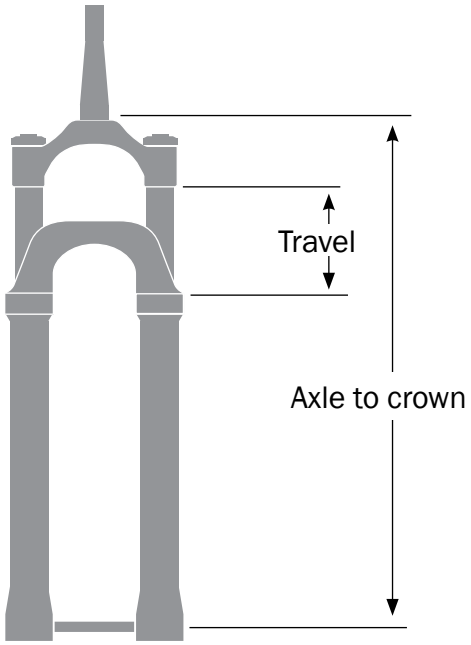

Axle to crown			Travel max
Maximum	S	557 mm	160 mm
Maximum	M-XL	576 mm	160 mm

Recommended sag: Refer to the suspension calculator at Trekbikes.com/suspension-calculator.

Seatpost

WARNING

Always follow the seatpost manufacturer's minimum insertion recommendation. Failure to follow the recommendation could cause damage to the seatpost and result in injury to the rider.

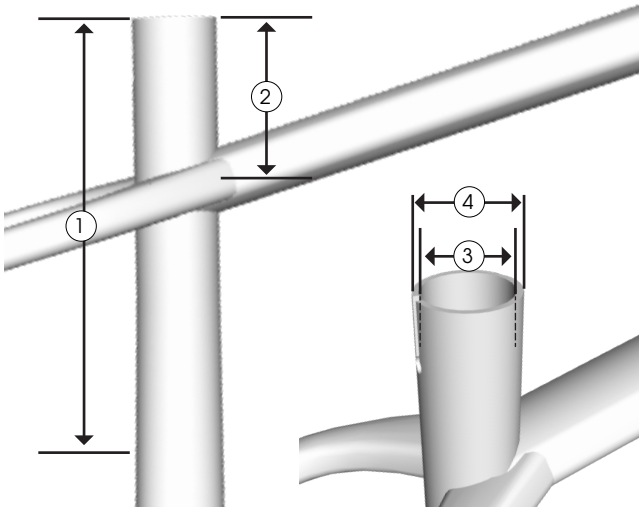

1	**Maximum insertion**	**S**	270 mm
		M	290 mm
		ML	300 mm
		L	310 mm
		XL	320 mm
2	**Minimum insertion**	75 mm	
3	**Seatpost OD**	31.6 mm	
4	**Seatpost clamp ID**	36.4 mm	

Chainline/chainring

Chainline	Chainring teeth (T)	
	Min	Max
52 mm	30T	30T
55 mm	30T	34T