Product Support

Remedy M.Y.19 Parts Quick Reference

REMEDY

Product Support

Remedy M.Y.19 Parts Quick Reference

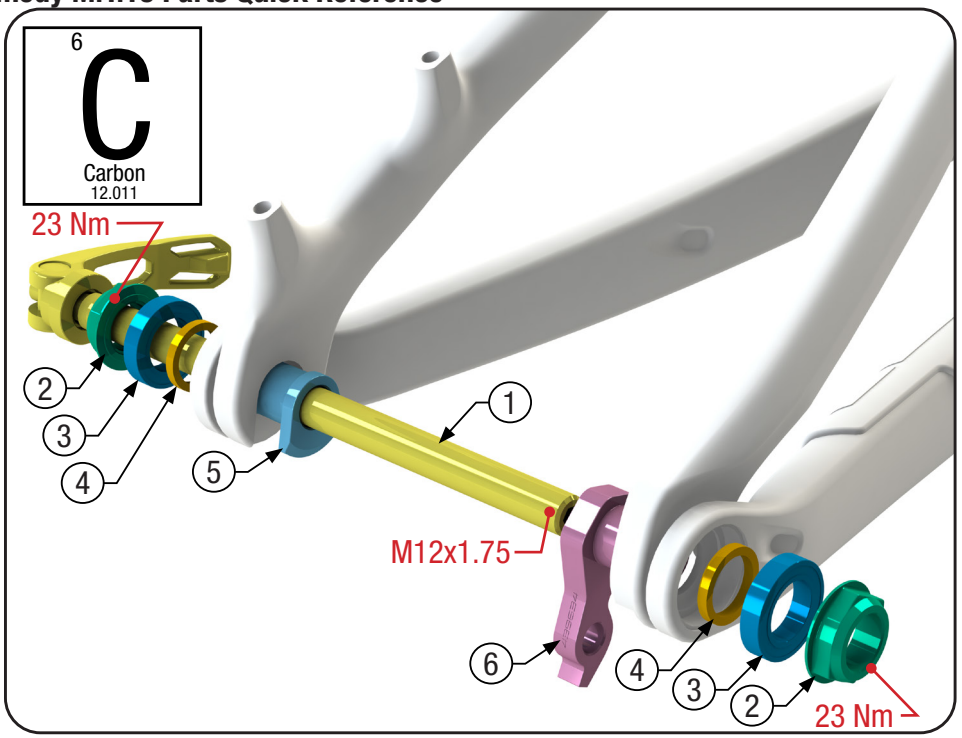

Item	Description	Note	Part Number	Qty
1	Thru Axle, Boost 148	12x198mm	W333770	1
2	ABP Convert Nut, M17	M17	W301803	2
3	ABP Convert Bearing	17x28x6mm	W305083	2
4	Bearing Spacer	Carbon Only	W440921	2
5	Axle Guide	M17	W541518	1
6	Derailleur Hanger	M17	W439634	1

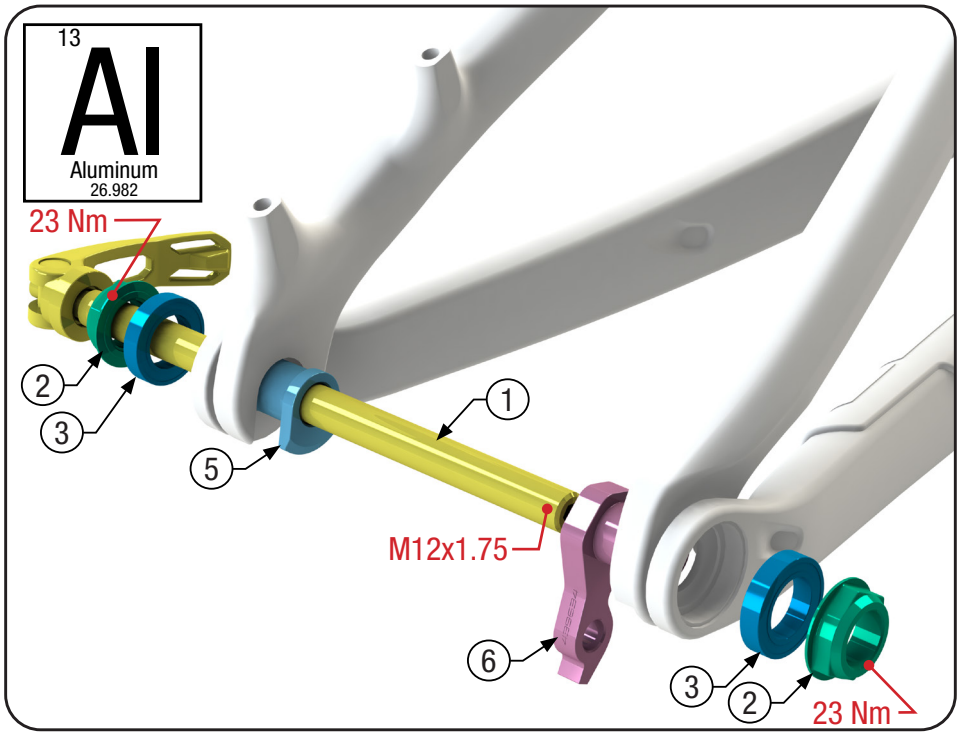

Item	Description	Note	Part Number	Qty
1	Thru Axle, Boost 148	12x198mm	W333770	1
2	ABP Convert Nut, M17	M17	W301803	2
3	ABP Convert Bearing	17x28x6mm	W305083	2
~~4~~	~~Bearing Spacer~~		~~W440921~~	~~2~~
5	Axle Guide	M17	W541518	1
6	Derailleur Hanger	M17	W439634	1



Product Support

Remedy M.Y.19 Parts Quick Reference

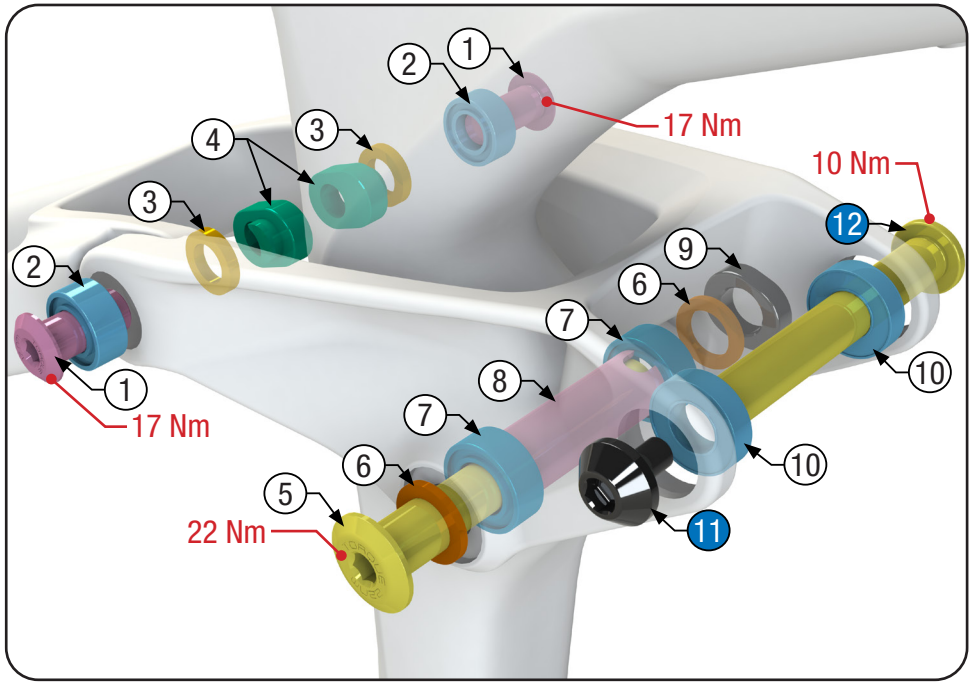

Item	Description	Note	Part Number	Qty
11	Shock Axle	M6x69mm	540755	1
12	Axle Fastening Bolt	M6x11mm	540755	1

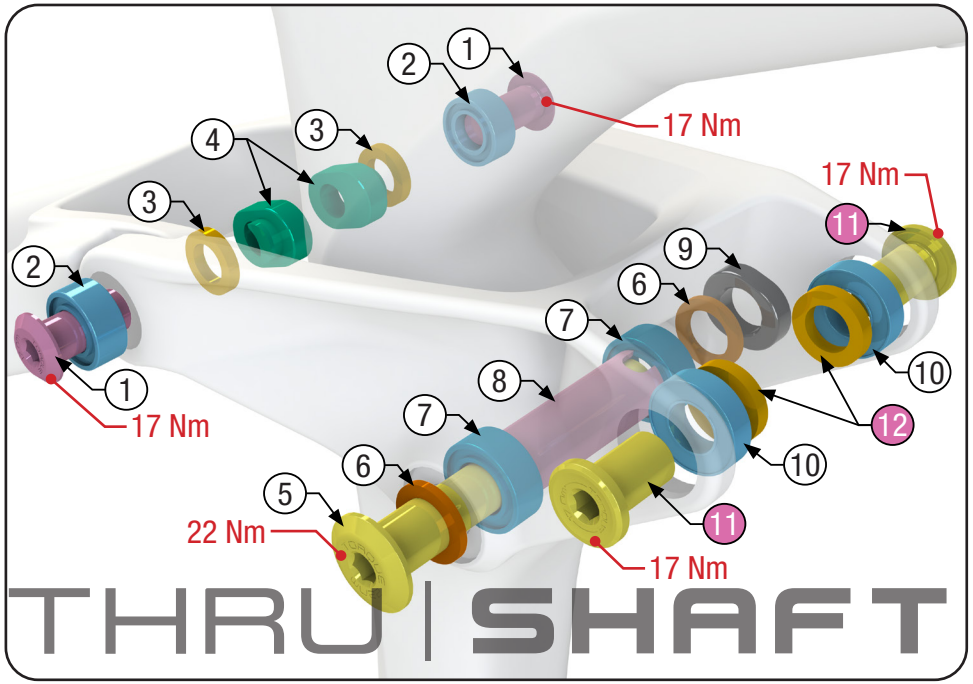

Item	Description	Note	Part Number	Qty
11	Thru Shaft Bolts	M10x16mm	W561881	2
12	Thru Shaft Spacers	16x10x3mm	W529969	2

Item	Description	Note	Part Number	Qty
1	Rocker:Seatstay Bolt	M10x20mm	W529220	2
2	Rocker:Seaststay Bearing	19x10x8mm	W529224	2
3	Bearing Spacer	16x10x3mm	W529969	2
4	Mino Insert	15x23mm	W529223	2
5	Rocker Pivot Axle	M12x21mm	W535469	1
6	Rocker Bolt Spacer	21x12x8mm	W290057	2
7	Rocker Pivot Bearing	21x12x8mm	W541147	2
8	Rocker Bearing Spacer	15x12x44mm	W310155	2
9	Rocker Axle Nut	M12	W311582	1
10	Rocker:Shock Bearing	10x19x5mm	W293466	2



Product Support

Remedy M.Y.19 Parts Quick Reference

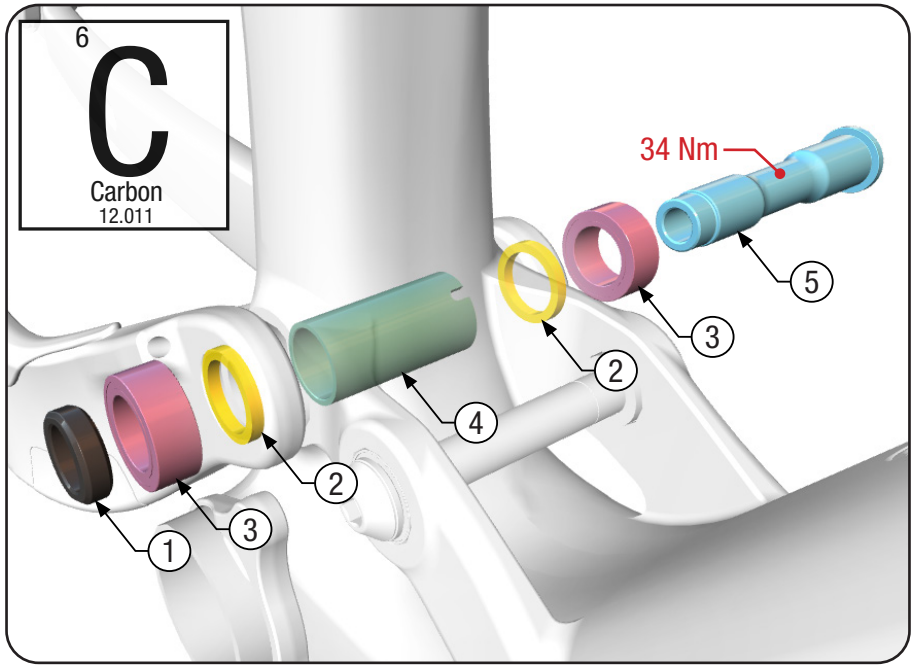

Item	Description	Note	Part Number	Qty
1	Threaded Insert	M16	512488 (kit)	1
2	Bearing Spacer	22x17x3mm	512488 (kit)	2
3	Main Pivot Bearing	26x17x10mm	W302025	2
4	Main Pivot Spacer	20x17x40mm	512488 (kit)	1
5	Main Pivot Axle	M16x83mm	512488 (kit)	1

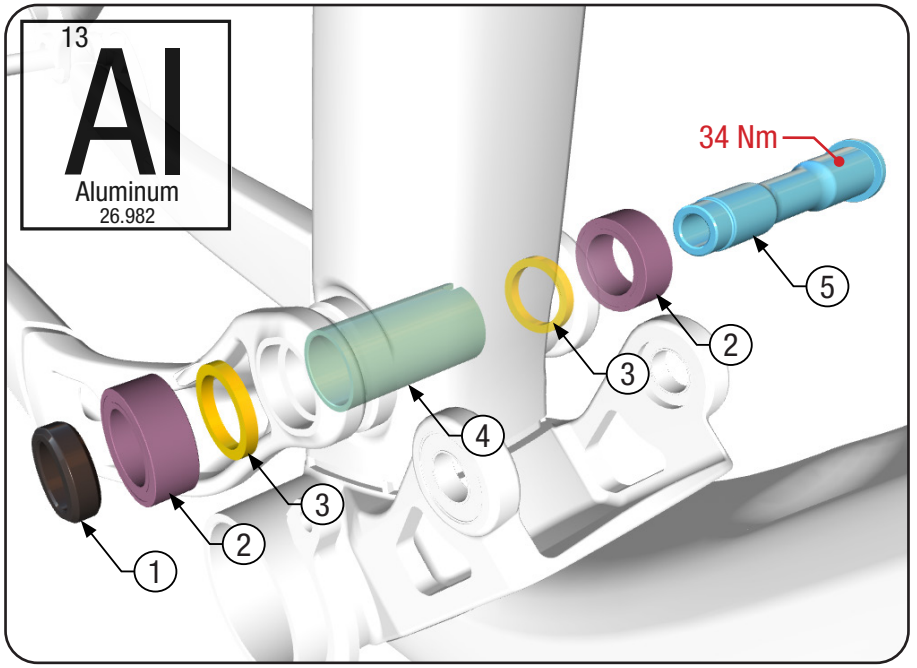

Item	Description	Note	Part Number	Qty
1	Threaded Insert	M16	512488 (kit)	1
2	Bearing Spacer	22x17x3mm	512488 (kit)	2
3	Main Pivot Bearing	26x17x10mm	W302025	2
4	Main Pivot Spacer	20x17x40mm	512488 (kit)	1
5	Main Pivot Axle	M16x83mm	543606 (kit)	1



Product Support

Remedy M.Y.19 Parts Quick Reference

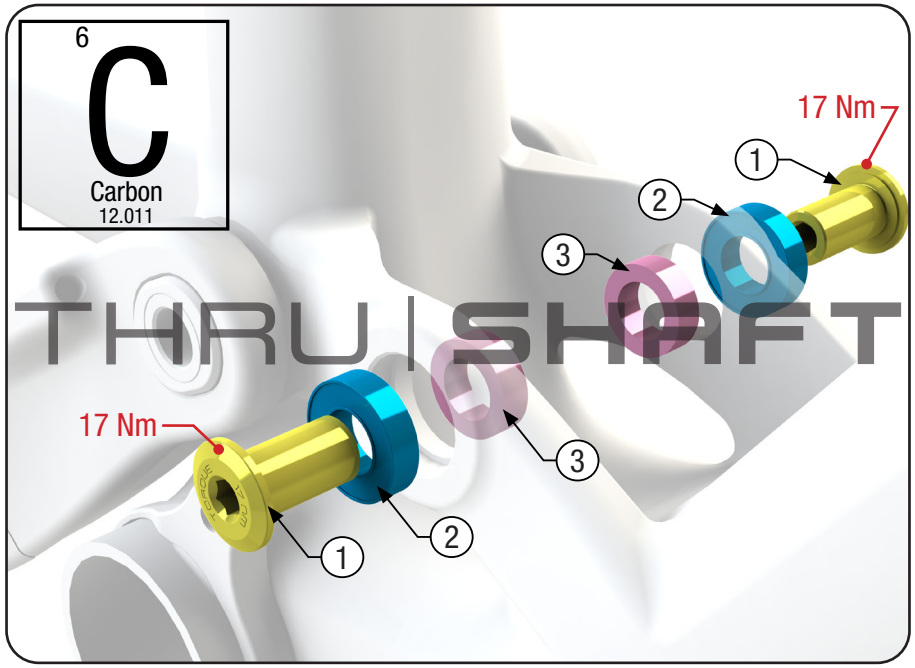

Item	Description	Note	Part Number	Qty
1	Thru Shaft Bolts	M10x16mm	W547868	2
2	Shock Pivot Bearing	19x10x5mm	W293466	2
3	Bearing Spacer	16x10x5mm	W536414	2

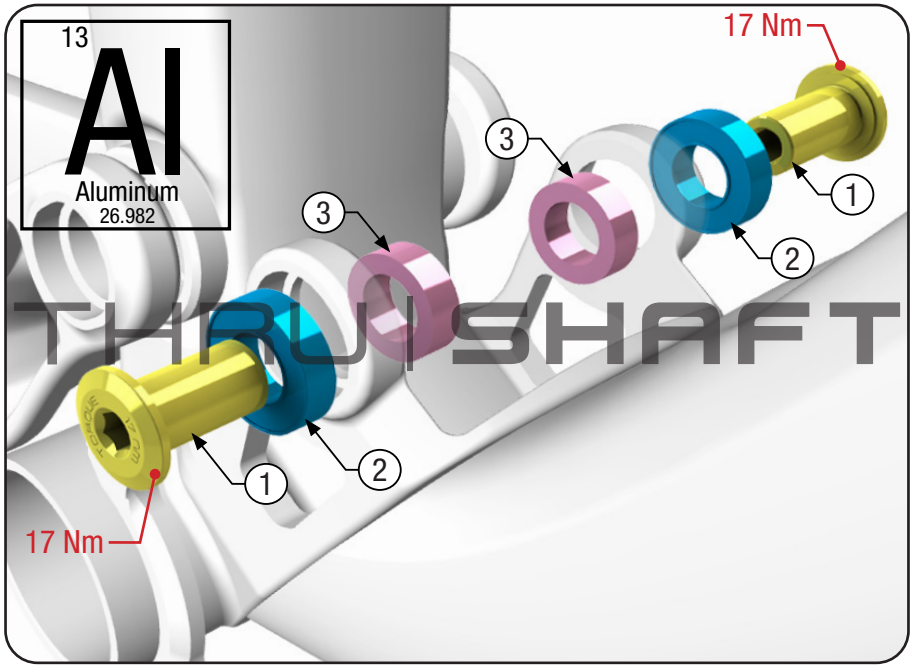

Item	Description	Note	Part Number	Qty
1	Thru Shaft Bolts	M10x16mm	W547868	2
2	Shock Pivot Bearing	19x10x5mm	W293466	2
3	Bearing Spacer	16x10x5mm	W536414	2



Product Support

Remedy M.Y.19 Parts Quick Reference

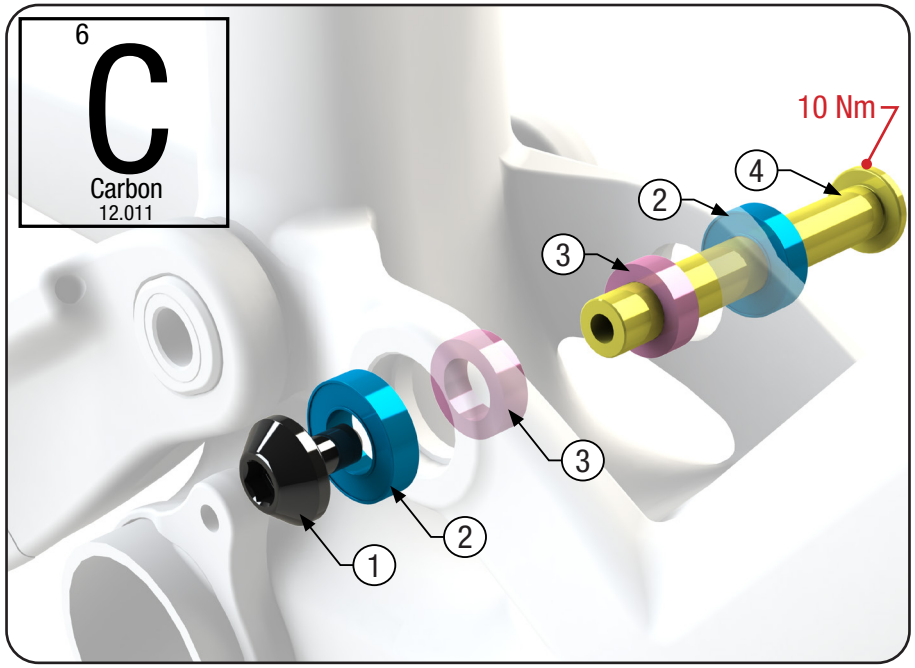

Item	Description	Note	Part Number	Qty
1	Axle Fastening Bolt	M6x11mm	540755 (kit)	1
2	Shock Pivot Bearing	19x10x5mm	W293466	2
3	Bearing Spacer	16x10x5mm	W536414	2
4	Shock Axle	M6x69mm	540755 (kit)	1

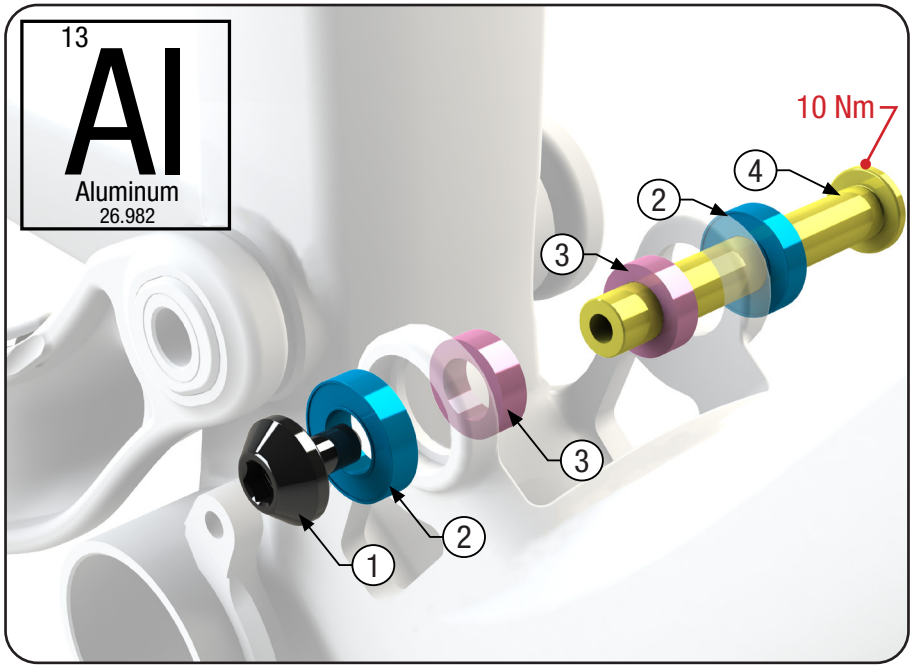

Item	Description	Note	Part Number	Qty
1	Axle Fastening Bolt	M6x11mm	540755 (kit)	1
2	Shock Pivot Bearing	19x10x5mm	W293466	2
3	Bearing Spacer	16x10x5mm	W536414	2
4	Shock Axle	M6x69mm	540755 (kit)	1



Product Support

Remedy M.Y.19 Parts Quick Reference

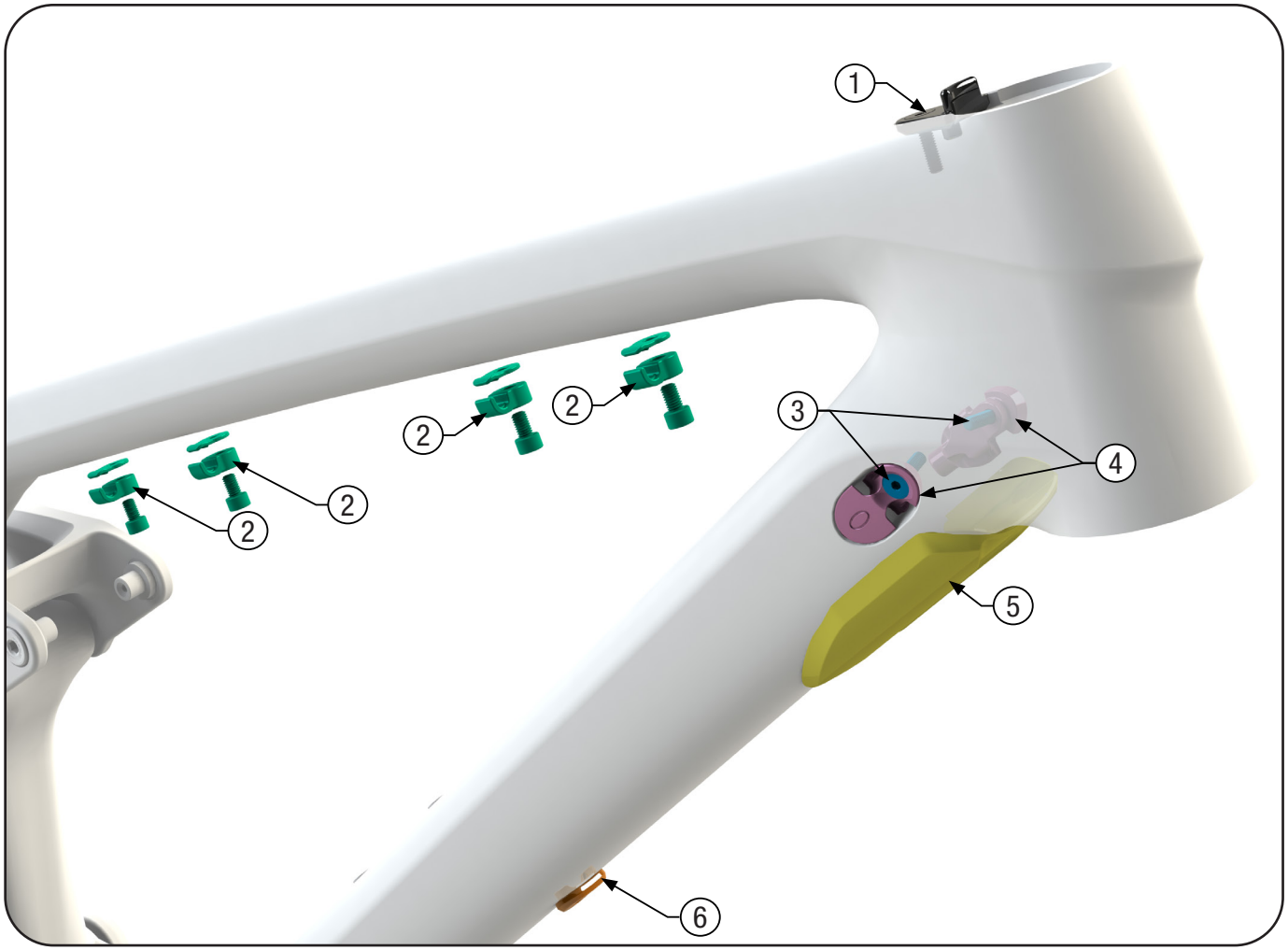

Item	Description	Note	Part Number	Qty
1	Knock Block Frame Chip		536723	1
2	TopTube Guides		W311727	4
3	Cable Stop Bolt	M4x12mm	W532763	3
4	Control Freak Cable Guide		W519232	3
5	Upper Downtube Armor		W529228	1
6	Downtube Cable Cinch		W513977	1



Product Support

Remedy M.Y.19 Parts Quick Reference

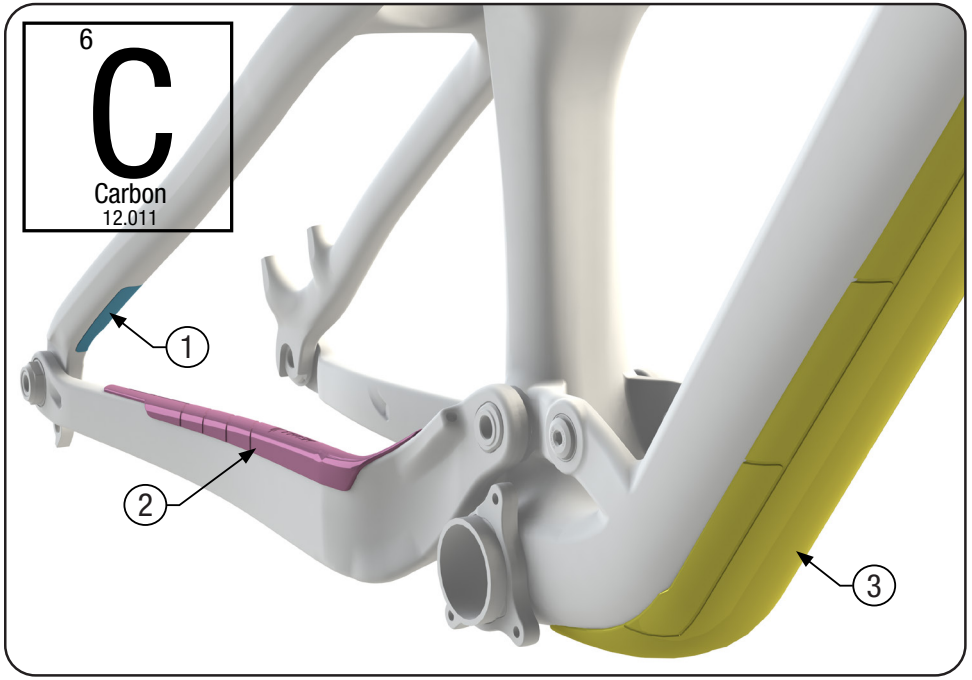

Item	Description	Part Number	Qty
1	Seatstay Armor	W531649	1
2	Chainstay Armor	W564699	1
3	Lower Downtube Armor	W530144	1

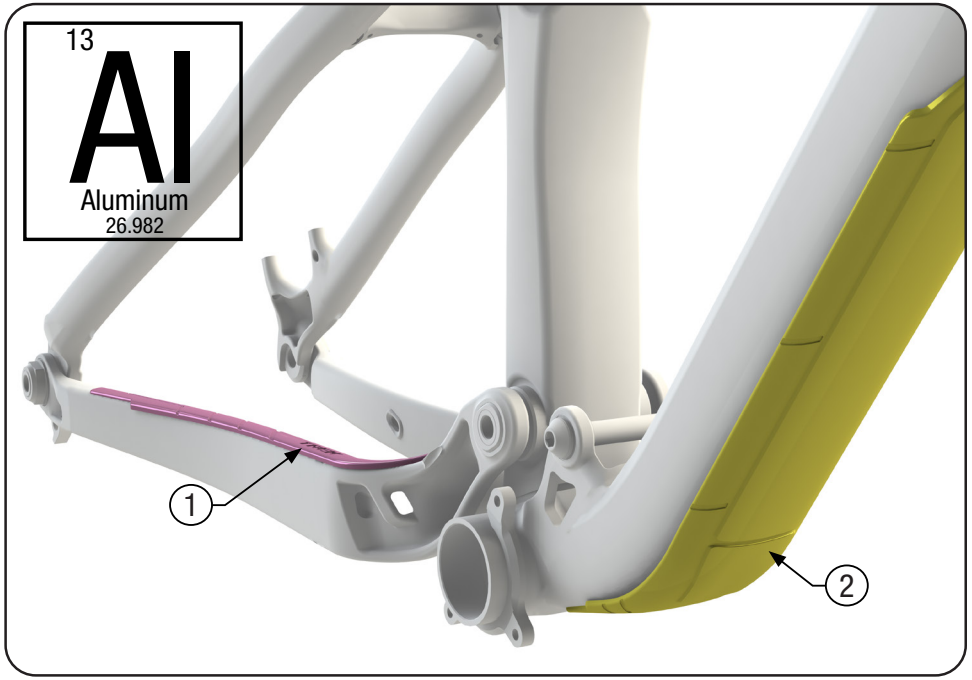

Item	Description	Part Number	Qty
1	Chainstay Armor	W532099	1
2	Lower Downtube Armor	W536435	1

