

2023 Carbon Rail

9.5, 9.7, 9.8, and 9.9 Gen 4

SERVICE MANUAL

Rev 2 September 2023

Contents


Headset with Knock Block

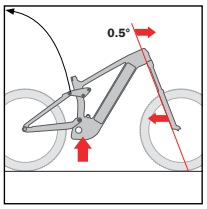

Adjust the geometry


Cable routing with System Controller


System controller and mini remote


RIB — docking assembly


Battery charge port

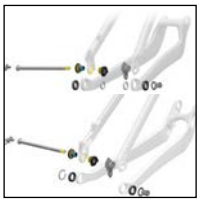
Active Braking Pivot (ABP)


Main pivot and chainstay

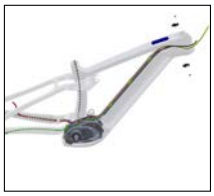
Cable routing with LED Remote


Display cover and LED remote


Drive unit and mounting bolts

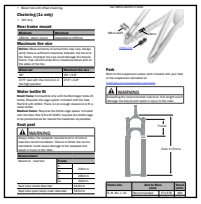
Specifications

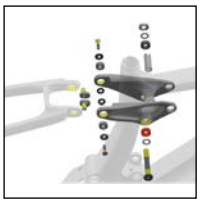
Rocker pivot and seatstay


Shock mounts


Frame guards and water bottle cage bolts


RIB — battery assembly


Speed sensor

Safety

WARNING

Properly tighten hardware

Always tighten hardware to the specified torque. Over-tightening hardware could deform or break the hardware or components. Under-tightening hardware could cause hardware or components to become loose. Either situation could damage the bicycle and result in injury to the rider.

WARNING

Reapply threadlocker

All reused-fasteners with pre-applied threadlocker must be cleaned with isopropyl alcohol and have new thread-locker applied before re-assembly. If threadlocker is not applied, the fasteners may loosen which could damage the bicycle and result in injury to the rider.

Legend

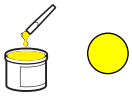
Apply grease


Do not apply grease


Apply threadlocker

Nm — Torque


Hex tool size


Torx tool


Drift size

★ — Zip tie

Copyright 2022 Trek Bicycle Corporation All Rights Reserved

Headset with Knock Block

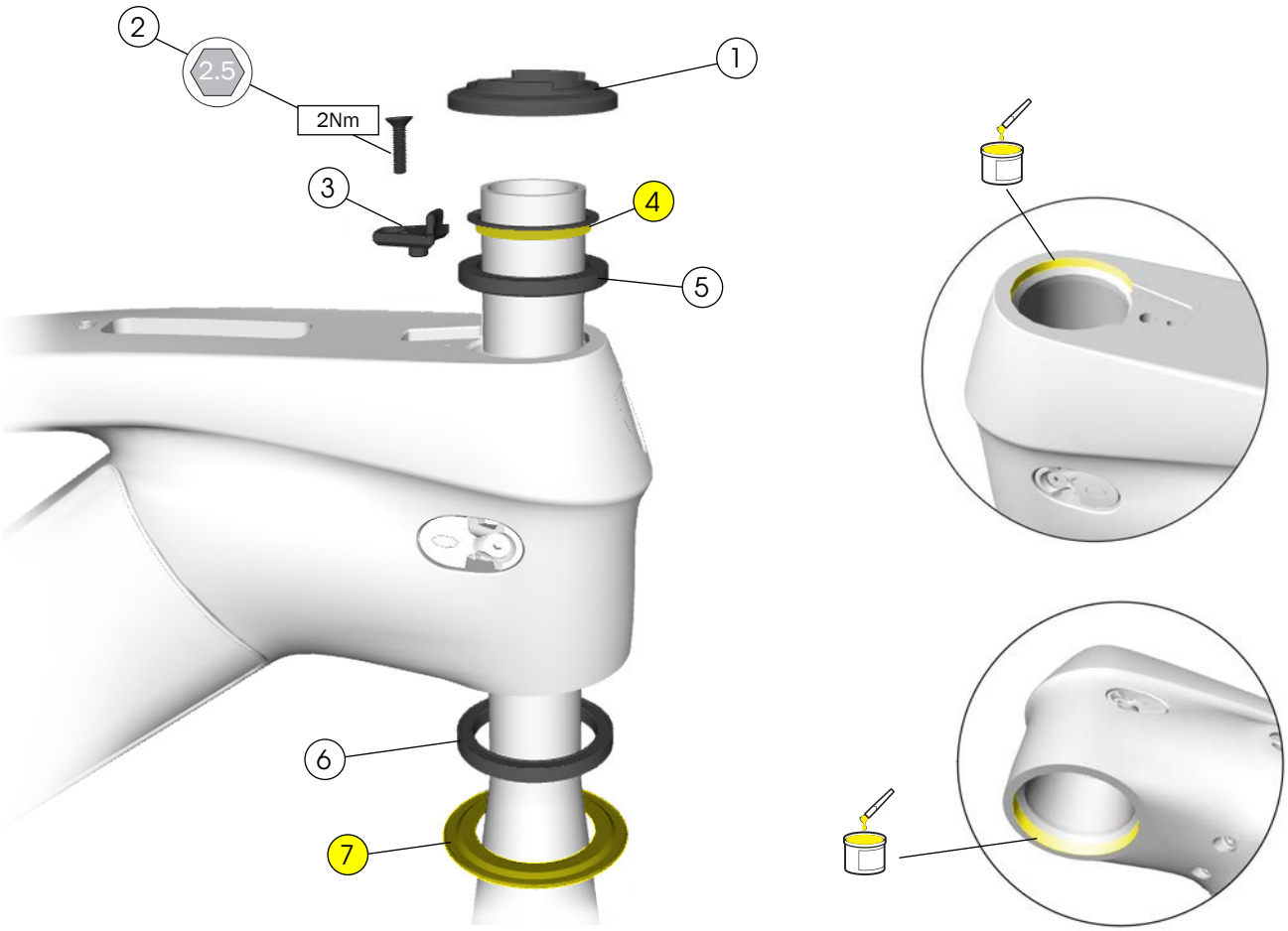

1. Upper bearing cover
2. Chip bolt — W532763
3. Knock Block chip

— 5252161

4. Compression ring — W532842
5. Upper bearing — W531676
6. Lower bearing, 1.8" diameter — W5269809
7. Crown race, for 1.5" diameter lower bearing (Rail 9.5) — W5269810

   Crown race, for 1.8" diameter lower bearing Rail 9.7, 9.8, 9.9) — W5283203

Tools

- 2.5mm hex tool
- Grease

Active Braking Pivot (ABP)

Rail 9.8 and Rail 9.9 — Carbon seatstay and chainstay

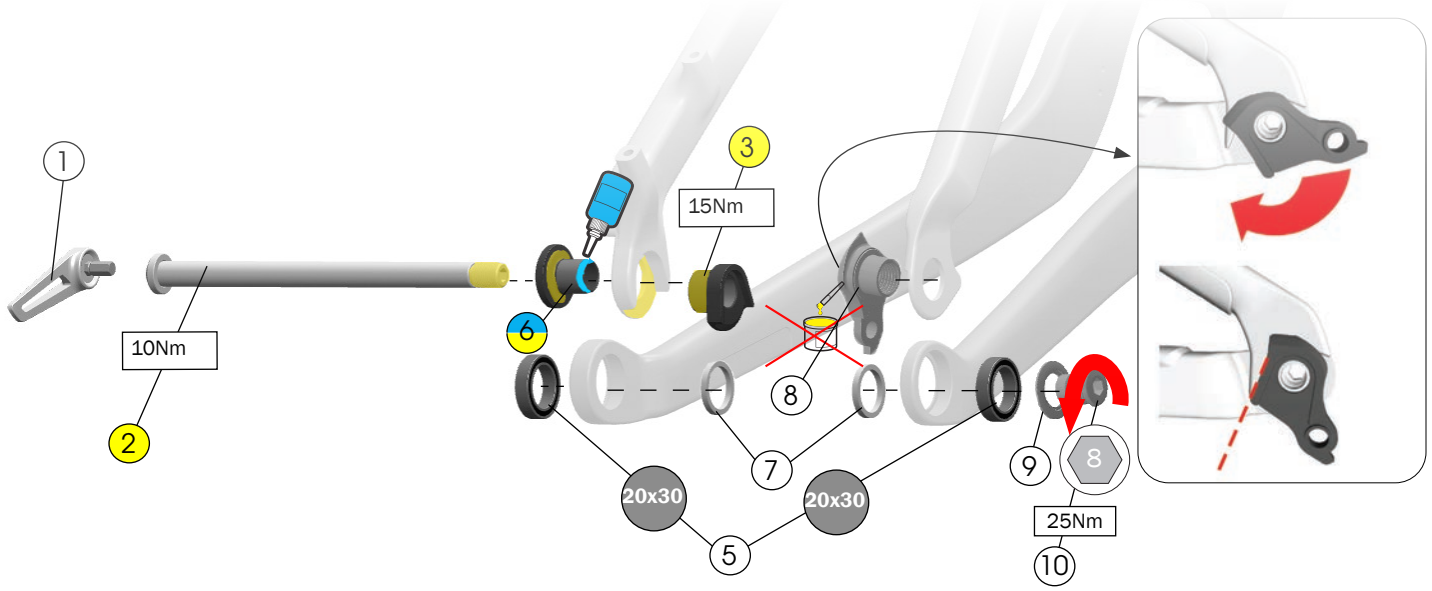

Rail 9.5 and Rail 9.7 — Alloy seatstay and chainstay

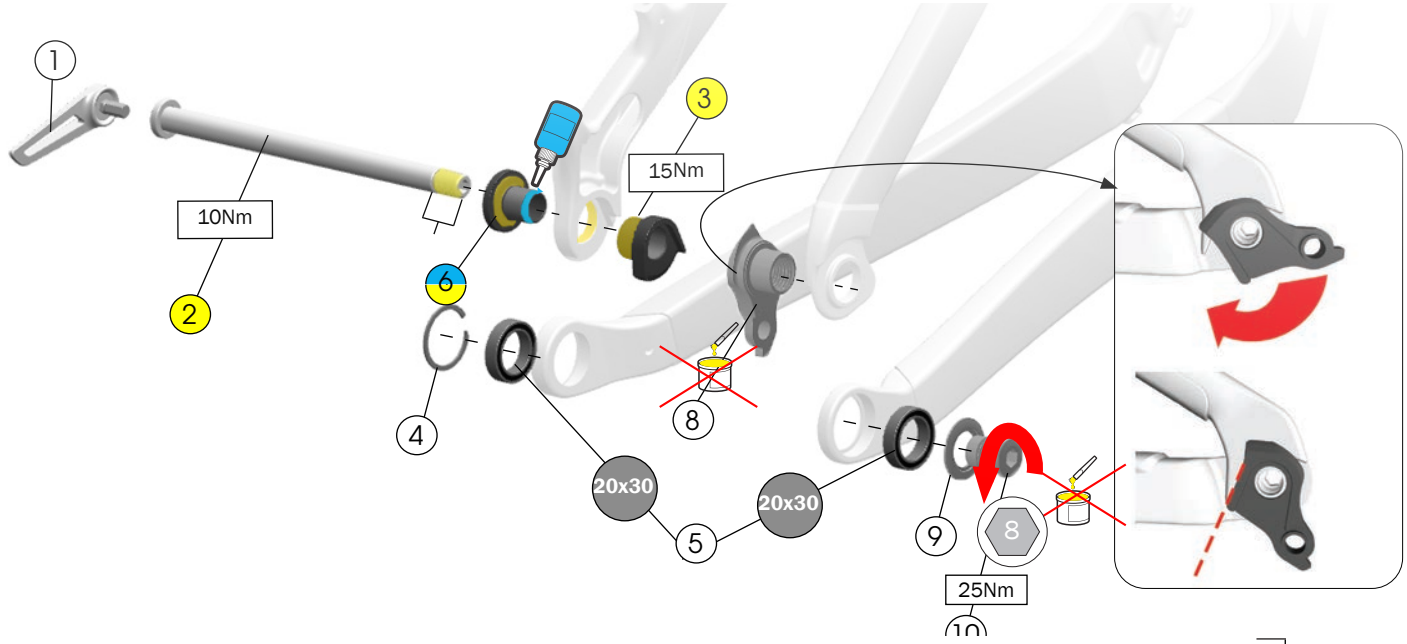

1. Switch lever — W573860
2. Thru axle — W583470
3. Non-driveside ABP dropout nut — W583419
4. Retaining ring — W5251279
5. Bearings — W583424
6. Non-driveside ABP bolt — W583420
7. Spacers — W583422 (carbon chainstays only)

— 599911

8. Derailleur hanger
9. Washer
10. Bolt (left-hand thread)

— W5271425

Tools

- Bearing press, 20x30 drift
- Cassette lockring tool
- Grease
- 8mm hex tool
- Torque wrench (left-hand thread) with 8mm hex bi

Rocker pivot and seatstay

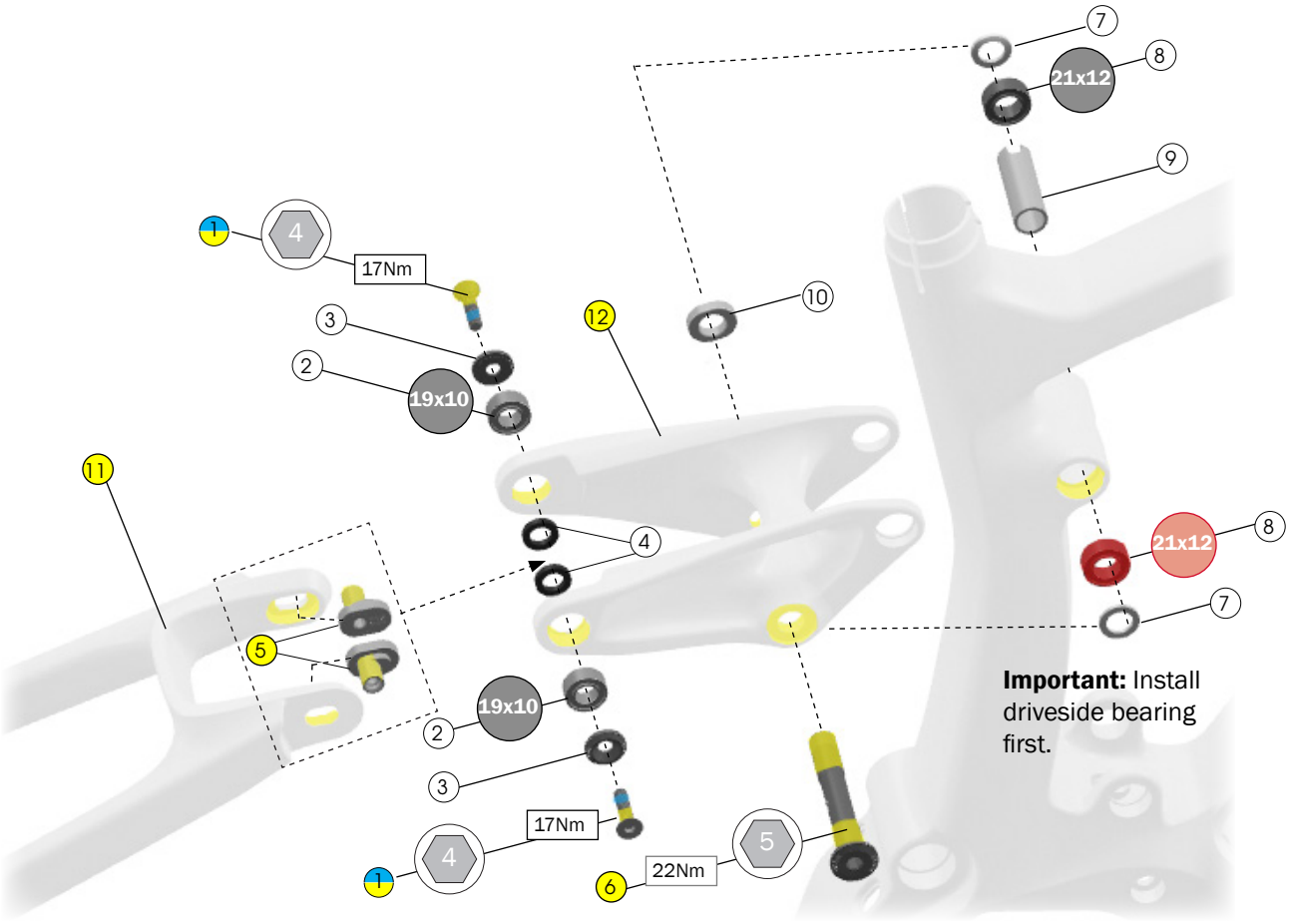

1. Bolts — W5270150
2. Bearings — W5256339
3. Concave washers — W5289553
4. Spacers — W529969
5. Mino links — W5270028
6. Rocker axle — W600627
7. Spacers — W290057
8. Bearings — W5256341
9. Seat tube pivot sleeve — W310155
10. Nut — W311582
11. Seatstay, carbon — 30893
    Seatstay, aluminum — 35491
    Search trekbikes.com to find the color-matched part for your bike.
12. Rocker link — 30969. Search trekbikes.com to find the color-matched part for your bike.

Tools

- Bearing press, 19x10 and 21x12 drifts
- 4mm and 5mm hex wrenches
- Torque wrench with 4mm and 5mm hex bits

Adjust the geometry

Flip the Mino links in the seatstay pivot to change the bike's geometry to fit your riding style or the terrain.

Notice: If using a 29" front wheel and a 27.5" rear wheel, the Mino links must be in the high position.

Steeper head tube angle

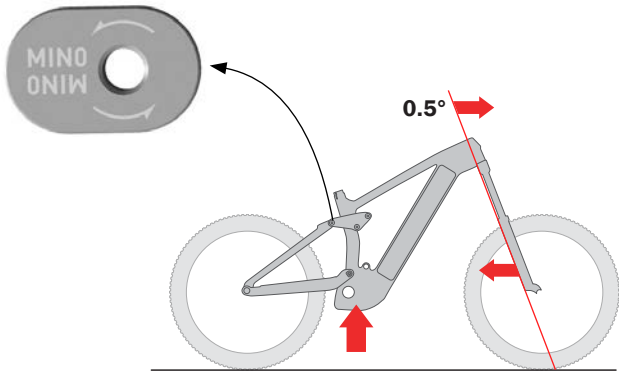

Mino links in the high position

- Pulls in the front fork for quicker steering
- Raises the bottom bracket for improved climbing

Slacker head tube angle

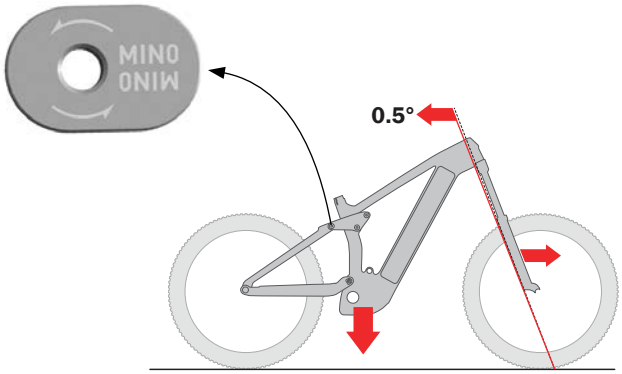

Mino links in the low position

- Pushes the head tube angle back and pushes out the front fork for slower steering that is more stable at high speed
- Lowers the bottom bracket for more stability

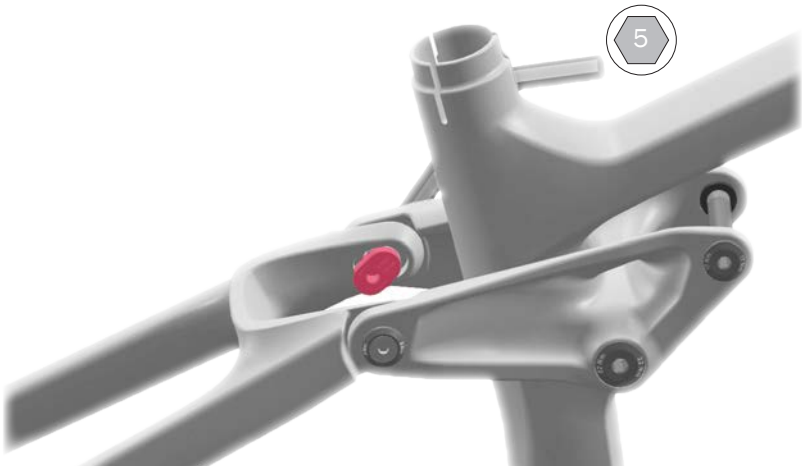

Tools

- 5mm hex tool
- Torque wrench with 5mm hex bit

1. With the bike on the ground, loosen and remove one Mino link chip.
2. Loosen and remove the other Mino link chip.
3. Position the bike:
   Mino links high: Lift the bike by the seat tube. This will pull the rear triangle up and forward.
   Mino links low: With the chips removed, gravity will pull the rear triangle down and back.
4. Place one Mino link chip into the desired position. Slightly tighten the Mino link bolt.
5. Install the other Mino link chip into the same position. Slightly tighten the Mino link bolt.
6. Torque both Mino link bolts to 17Nm.

Main pivot and chainstay

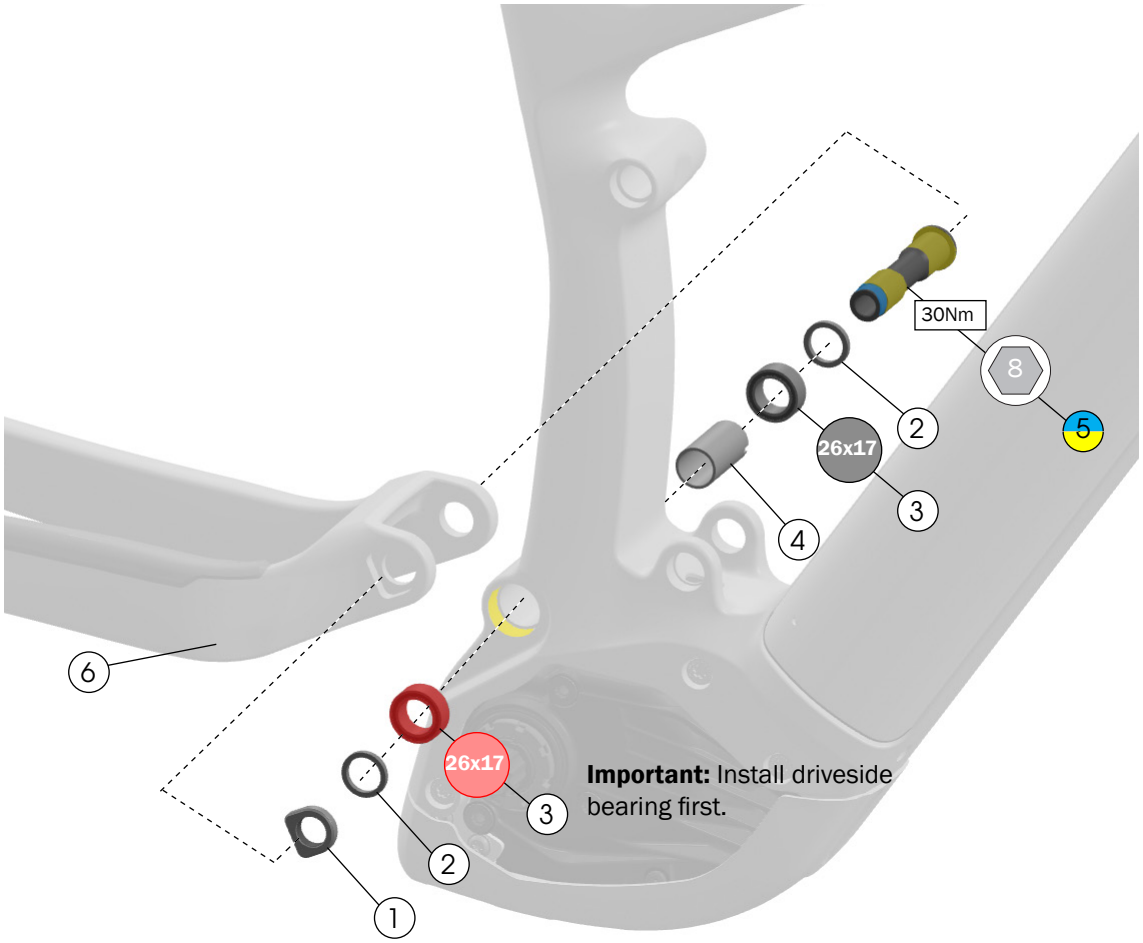

1. Nut — W584134
2. Spacers — W440921
3. Bearings — W5256338

— 599909

4. Main pivot sleeve — W500592
5. Main pivot axle — W601376
6. Chainstay, carbon — 30891

   Chainstay, aluminum — 35490
   Search trekbikes.com to find the color-matched part for your bike.

Tools

- Bearing press, 26x17 drift
- 8mm hex tool
- Torque wrench with 8mm hex bit
- Grease

Shock mounts

Standard

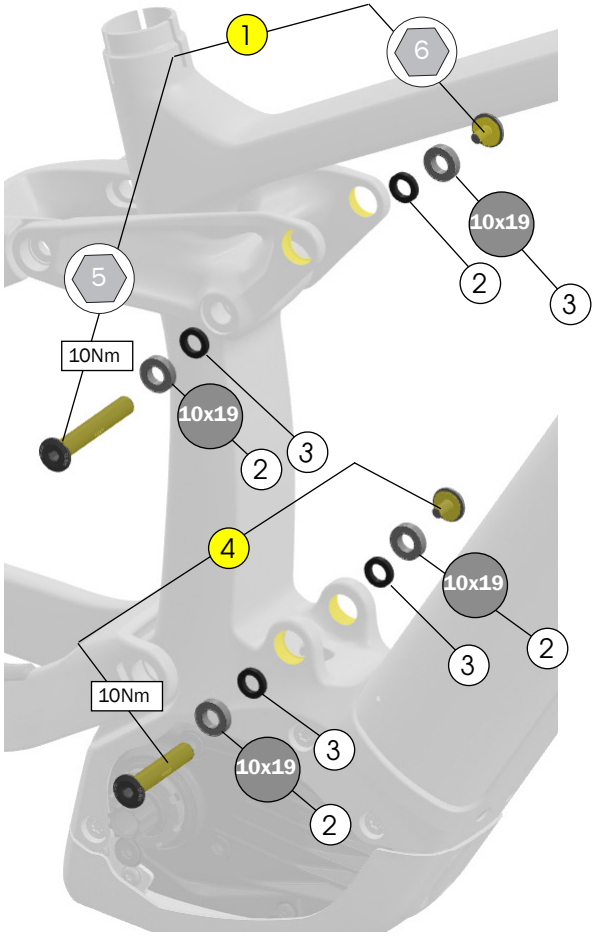

Trunnion

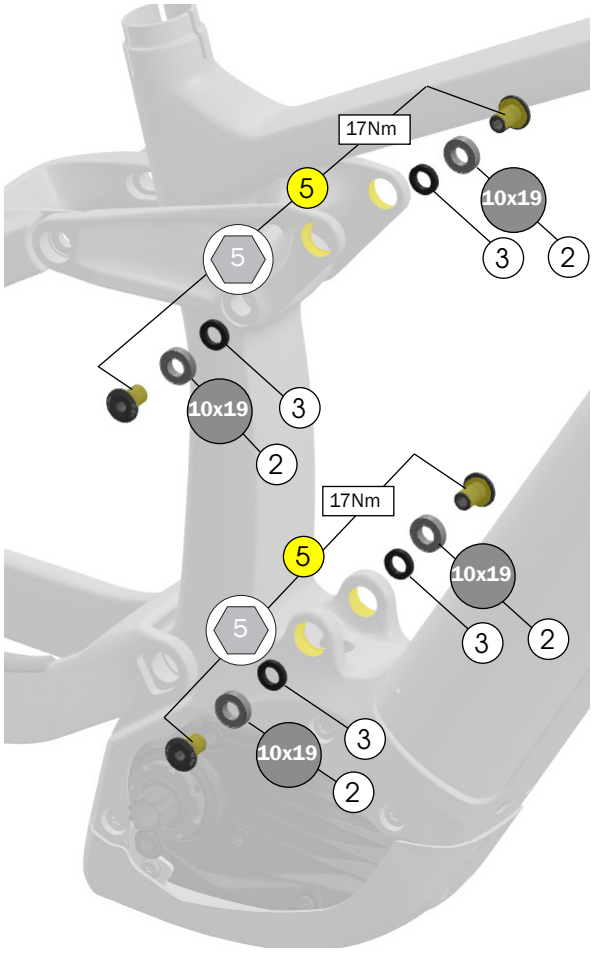

Tools

- Bearing press, 10x19 drift
- 5mm and 6mm hex wrenches
- Torque wrench with 5mm and 6mm hex bits

1. Standard upper shock mount bolt and end cap — 5258209
2. Bearings — W5256337
3. Spacers — W529969
4. Standard lower shock mount bolts — 5258210
5. Thru shaft shock mount bolts — W600630

Dimensions



Shock Dimensions

Eye-to Eye-length: 230mm

Stroke length: 57.5mm

Upper width: 54mm

Lower width: 40mm

Cable routing — Rail 9.8 and 9.9 with System Controller

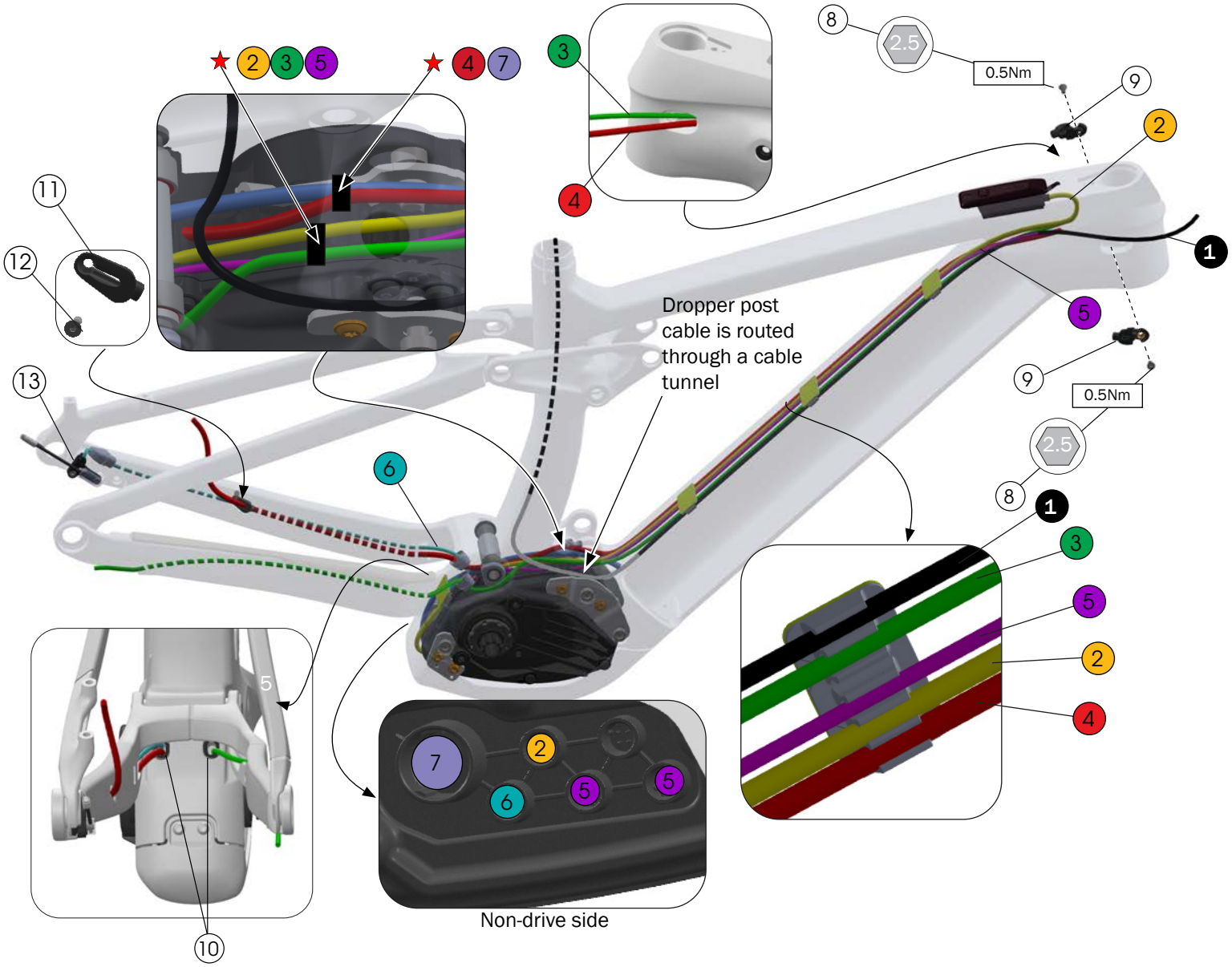

1. Dropper post cable
2. Controller cable — EB12.120.006*
3. Derailleur housing
4. Rear brake hose
5. Light cable(s) (Lights not included)
6. Speed sensor cable
7. Battery power cable — EB12.120.04A*

*Bosch part number. Not available on trekbikes.com.

8. Flat head screws — W532763
9. Cable guides — W519232
10. Cable exit grommets — W5255861
11. Grommet — W543605
12. Countersink screw — W524884
13. Speed sensor assembly — See page 14.

★ Zip tie

Cable routing — Rail 9.5 and 9.7 with LED Remote

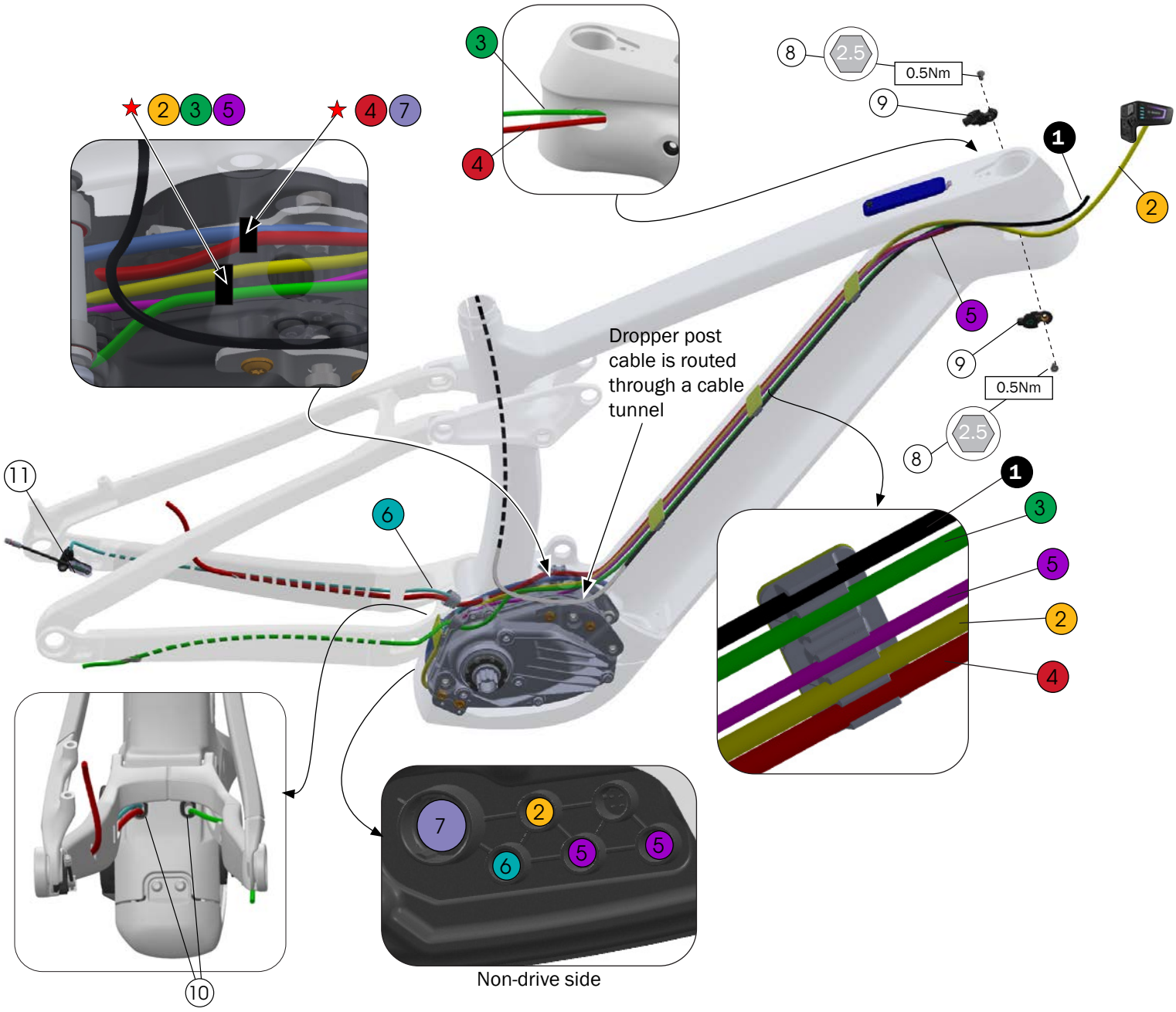

1 Dropper post cable

2 LED Remote cable — EB12.120.005*

3 Derailleur housing

4 Rear brake hose

5 Light cable(s) (Lights not included)

6 Speed sensor cable

7 Battery power cable — EB12.120.00T*

8 Flat head screws — W532763

9 Cable guides — W519232

10 Cable exit grommets — W5255861

11 Speed sensor assembly — See page 14.

★ Zip tie

*Bosch part number. Not available on trekbikes.com.

Frame guards and water bottle cage bolts

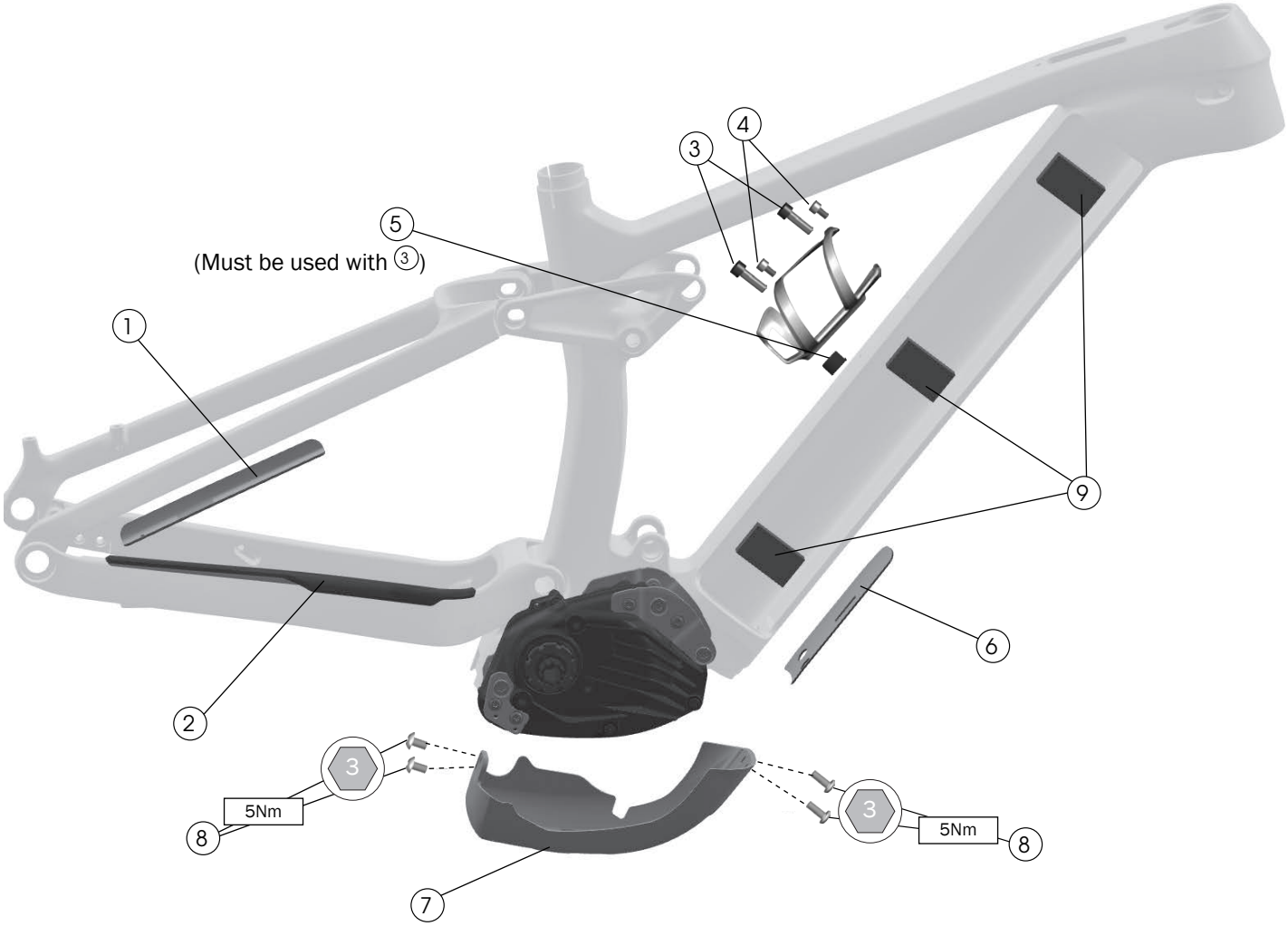

1. Seatstay guard — W5255862
2. Chainstay guard — W587594
3. Screw (S, M frames only) — W596821
4. Bolt (L and XL frames only) — W549307
5. Cage spacer (S, M frames only) — W5256157
6. Down tube guard — W590604
7. Drive unit guard — W5253938
8. Screws — W549305
9. Foam pads — W5307155

Adhesive guards and pads 1 2 6 9

Use isopropyl alcohol to clean the frame surface where the guards and pads attach. Wait for the alcohol to dry before applying the guards.

Notice: Do not clean the entire frame with isopropyl alcohol. Isopropyl alcohol could damage the paint.

Display and remote

Rail 9.8 and Rail 9.9

System controller



1. Bolt — W5287174
2. System controller — 5315896
3. Display grommet — W5285659

*Bosch part number. Not available on trekbikes.com.

Mini remote



1. Mini remote — 5315897

*Bosch part number. Not available on trekbikes.com.

Rail 9.5 and Rail 9.7

Display cover

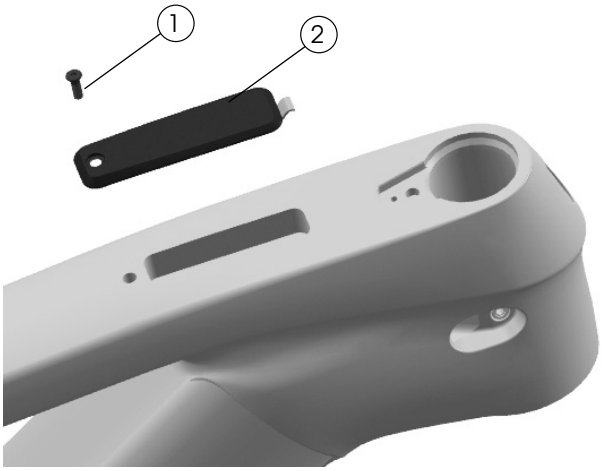

1. Bolt — W5287174
2. Display cover — W5291499

LED remote

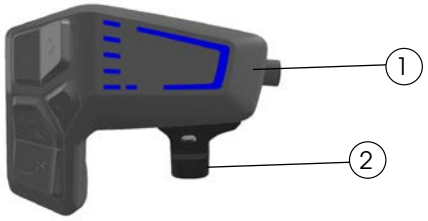

1. LED remote — 5288736
2. LED remote universal clamp — 5288743

   LED Remote cable (See Cable routing — Rail 9.5 and 9.7 with LED Remote on page 9) — EB12.120.005*

*Bosch part number. Not available on trekbikes.com.

RIB — battery assembly

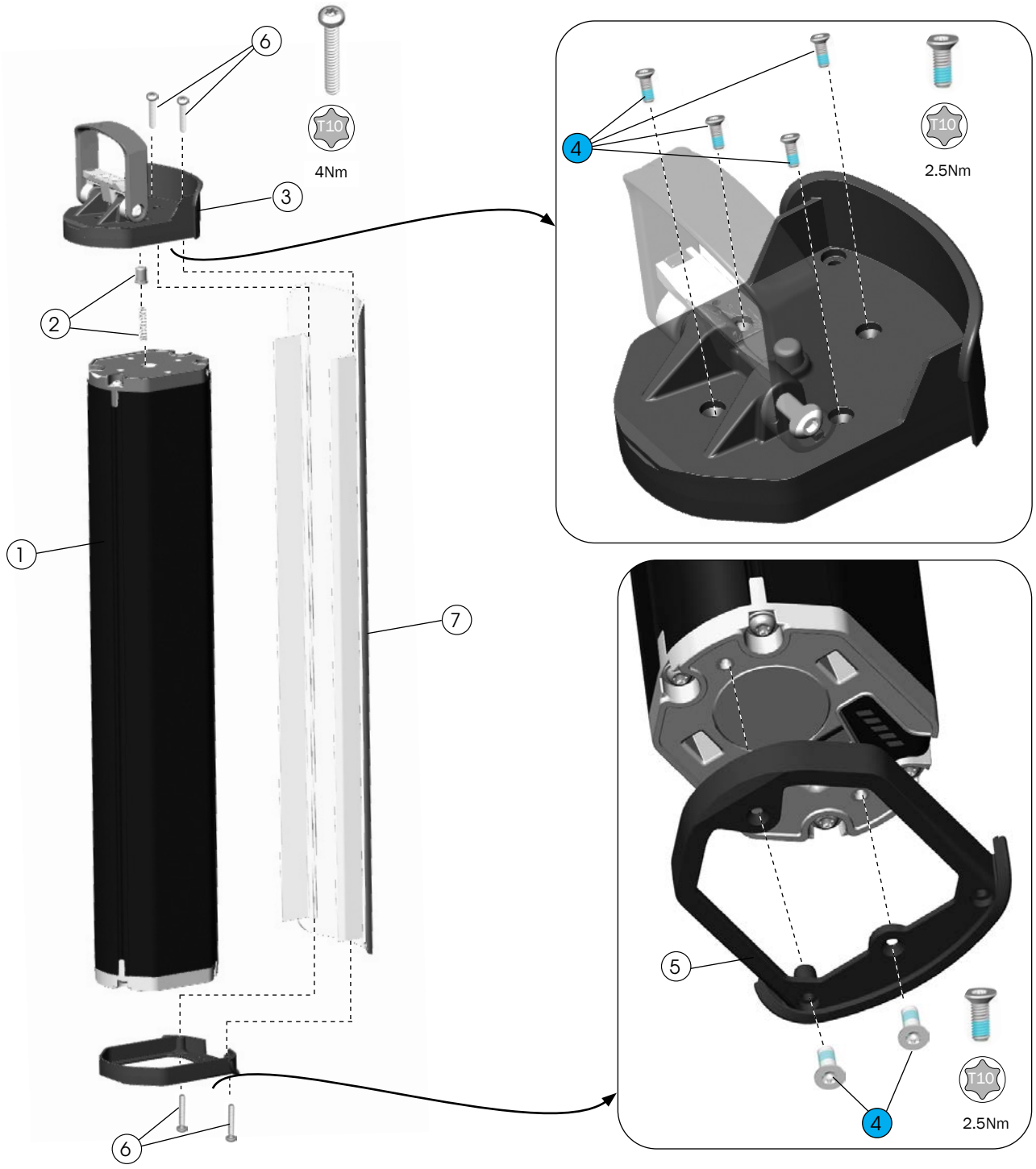

1. Battery, vertical, Smart System,
   S frame, 625Wh — EB12.100.012*
   M - XL frame -750Wh — 5288731
2. Push pin and spring — 5312675
3. Battery handle assembly — W5252236
4. Bolts, M3x8 — W5269016
5. Docking bracket — W5252240
6. Bolts, M3x20 — W5254060
7. Cover, 625Wh battery — 37359
   Cover, 750Wh battery — 37360
   Search trekbikes.com to find the color-matched part for your bike.

*Bosch part number. Not available on trekbikes.com.

RIB — docking assembly

Lower assembly

Upper assembly

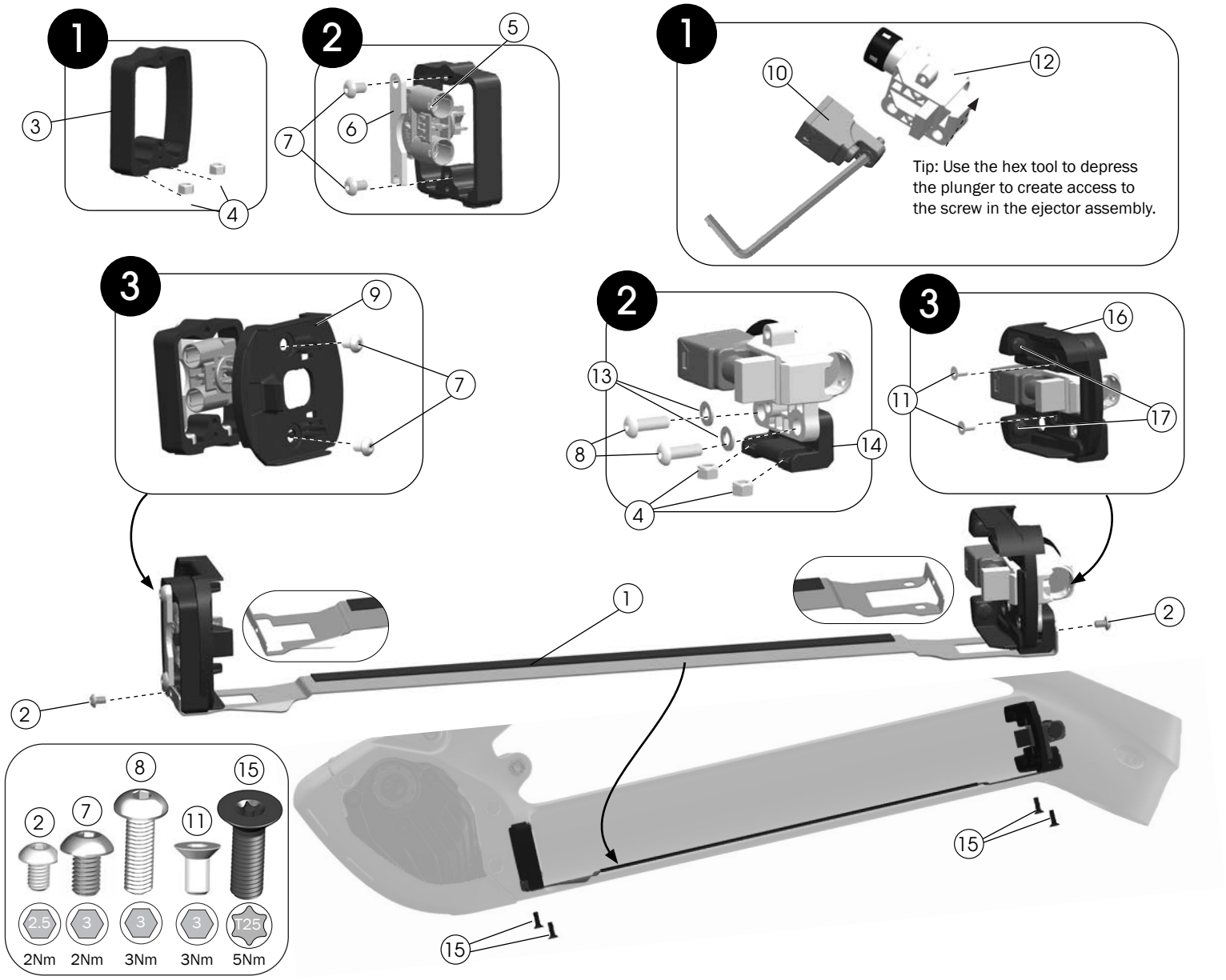

1. Alignment plate
   S frame, 650Wh battery — W5252805
   M–XL frame, 750Wh battery — W5252806
2. Screws
4. Locknuts
8. Screws
11. Countersunk bolts
15. T25 security screws
13. Washers

— 5257257

3. Lower docking bracket
14. Upper docking bracket

— 5277571

5. Battery connection plug — EB12.100.015*
6. Power connection retention bracket
7. Screws — W549307

— 5312122

9. Lower battery mounting plug — W5252293
16. Upper lock cover — W5252292
17. Bumpers — 579326
10. Ejector assembly — 579324
12. Lock assembly — W562311

*Bosch part number. Not available on trekbikes.com.

Drive system components

Drive unit and mounting bolts

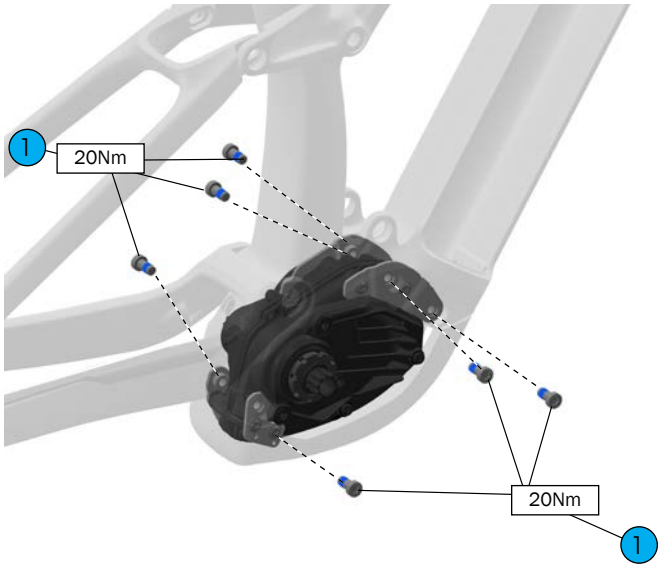

1 Mounting bolts, TP40 — 5265419
(Bosch 1270.016.470)

Battery charge port

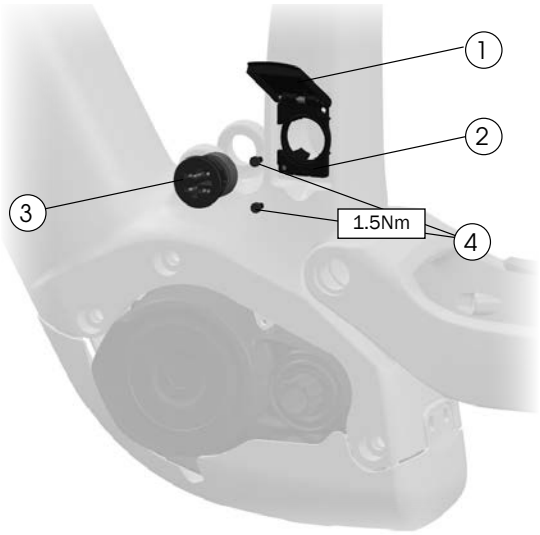

1 Charge port cover — 44374
Search trekbikes.com to find the color-matched part for your bike.

2 Base — W5251862

3 Charge socket — EB12.120.04A*

4 Bolts — 5284849

*Bosch part number. Not available on trekbikes.com.

Speed sensor

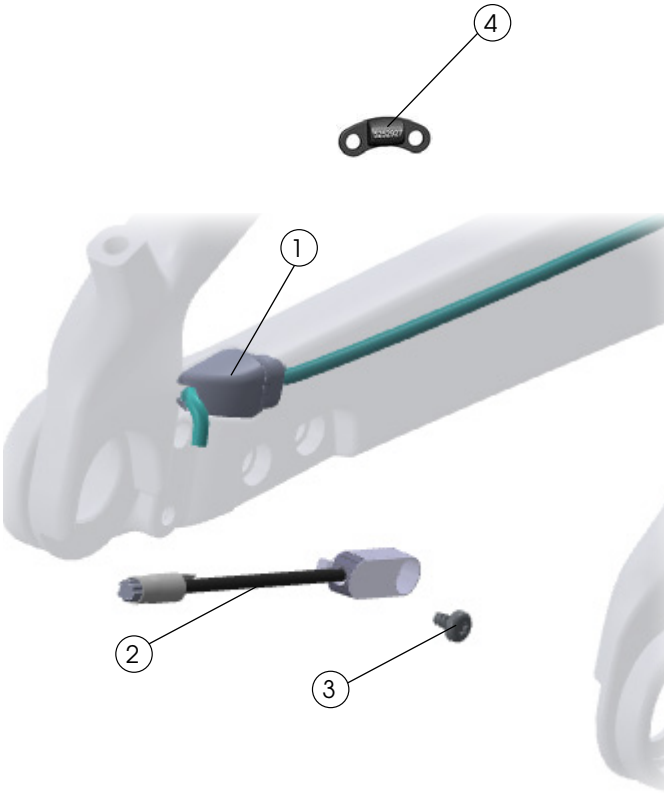

1 Speed sensor chainstay plug — W587873

2 Speed sensor — 5284750

3 Bolt — W562831

4 Rotor mount speed sensor magnet — W5252927

Specifications

Chainline (1x only)

- 55 mm
- Boost hub with offset chainring.

Chainring (1x only)

- 34T only

Rear brake mount

Minimum	Maximum
180mm, direct mount	Adaptable to 203mm

Maximum tire size

Notice: Measurements of actual tires may vary. Always verify there is sufficient clearance between the tire and the frame. Improper tire size could damage the bicycle frame. Trek recommends 6mm clearance above and on both sides of the tire.

Wheel set	Maximum tire size
29"	29" x 2.6"
27.5" rear with the mino link in the high position	27.5″ x 2.8″

Water bottle fit

Small frame: Compatible only with the Bontrager Voda 15 bottle. Requires the cage spacer included with the bike. Rail 9.9 with AirWiz: There is not enough clearance to fit a water bottle.
Medium frame: Requires the bottle cage spacer included with the bike. Rail 9.9 with AirWiz requires the bottle cage to be positioned as far toward the headtube as possible.

Seat post

WARNING

Always follow the seatpost manufacturer's minimum insertion recommendation. Failure to follow the recommendation could cause damage to the seatpost and result in injury to the rider.

Measurement		
Maximum insertion	Frame	
	S	230mm
	M	
	L	260mm
	XL	310mm
Seat tube inside diameter		34.9mm
Seat tube post clamp outer diameter		39.5mm

Kickstand mount

- Requires kickstand mounting bracket W581379 and two M6x1.0x25mm bolts



Fork

Refer to the suspension setup card included with your bike or the suspension calculator at

Trekbikes.com/suspension-calculator.

WARNING

Exceeding the recommended maximum fork length could damage the bicycle and result in injury to the rider.

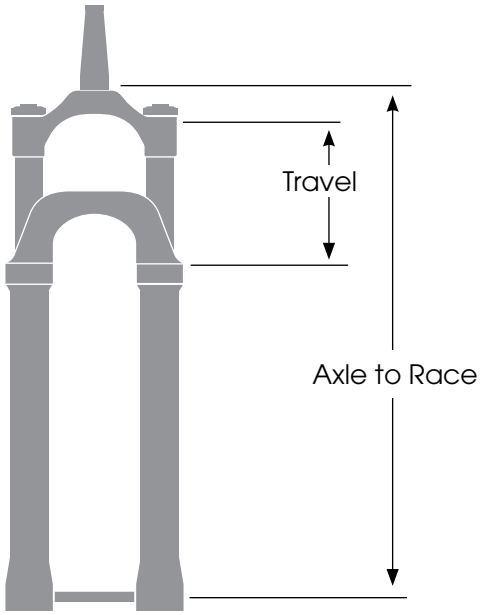

Frame size	Axle to Race (mm)		Travel (mm)
S, M, ML, L, XL	Recommended	571-576	160
	Maximum	586	170