

2023 Alloy Rail

5, 7, and 9 Gen 3

SERVICE MANUAL

January 2025

Contents


Safety

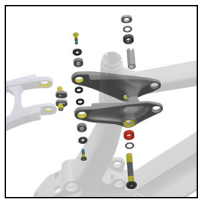
Rocker pivot and seatstay and seat stay

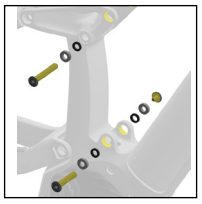
Shock mounts


RIB — battery assembly

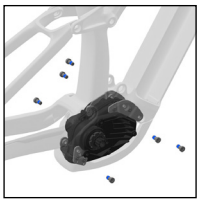
Drive unit and mounting bolts

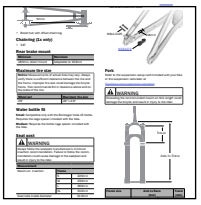
Specifications

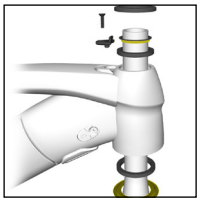
Headset with Knock Block

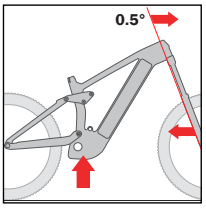

Adjust the geometry


Cable routing


RIB — docking assembly

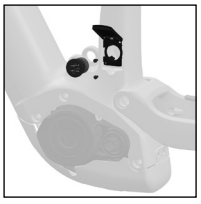
Battery charge port cover

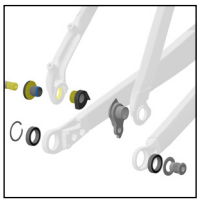
Active Braking Pivot (ABP)

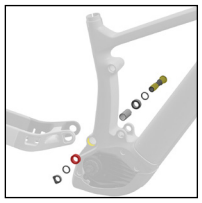
Main pivot and chainstay and chainstay

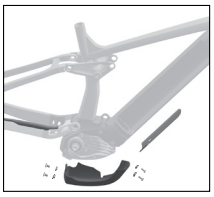
Frame guards


Remote


Speed sensor

Safety

WARNING

Properly tighten hardware

Always tighten hardware to the specified torque. Over-tightening hardware could deform or break the hardware or components. Under-tightening hardware could cause hardware or components to become loose. Either situation could damage the bicycle and result in injury to the rider.

WARNING

Reapply threadlocker

All reused-fasteners with pre-applied threadlocker must be cleaned with isopropyl alcohol and have new threadlocker applied before re-assembly. If threadlocker is not applied, the fasteners may loosen which could damage the bicycle and result in injury to the rider.

Legend


Apply grease


Do not apply grease


Apply threadlocker

Nm — Torque

Hex tool size

Torx tool

Drift size

Zip tie

Copyright 2022 Trek Bicycle Corporation All Rights Reserved

Headset with Knock Block

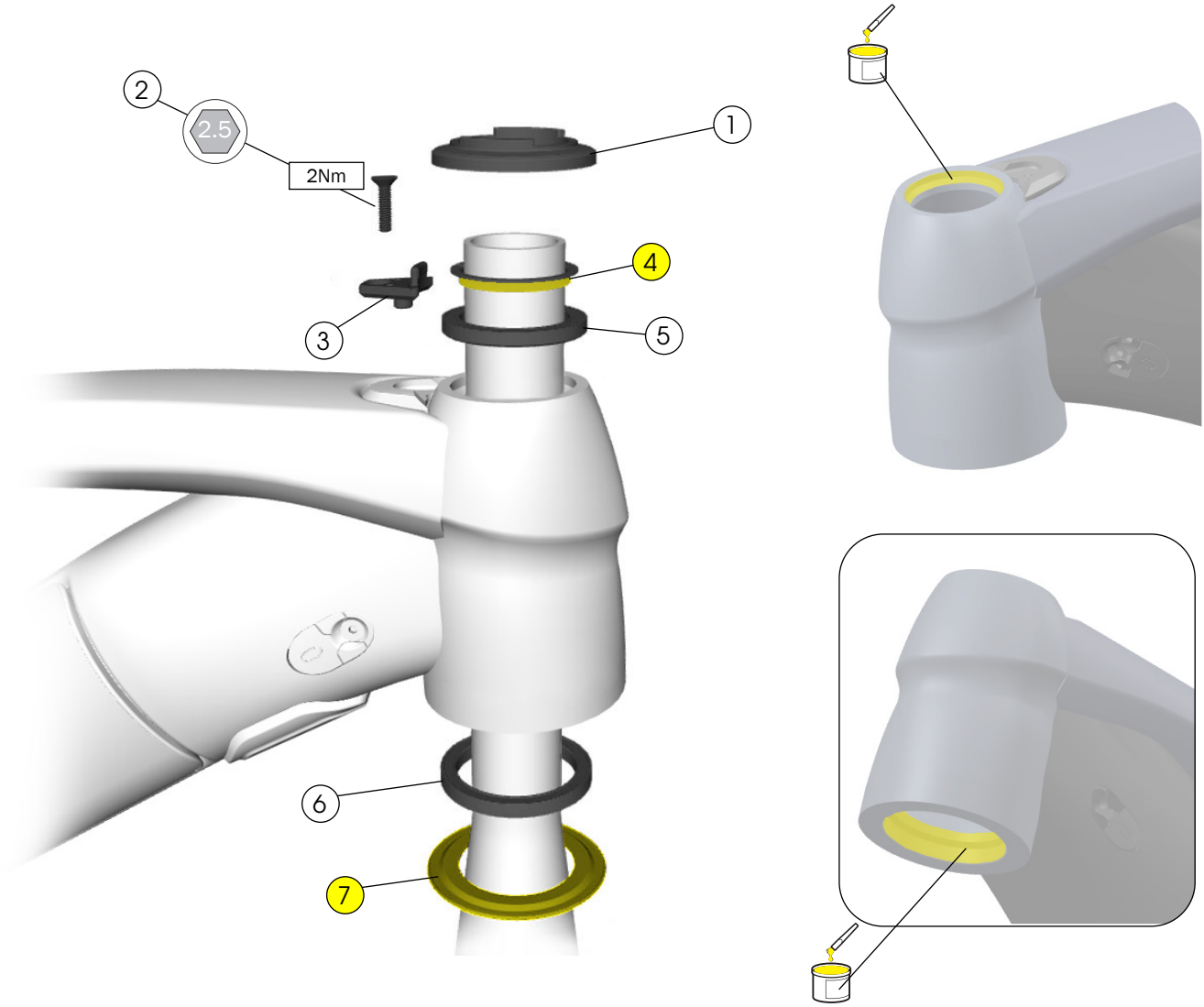

- 1 Upper bearing cover
- 2 Chip bolt — W532763
- 3 Knock Block chip

— 5252157

- 4 Compression ring — W532842
- 5 Upper bearing — W531676
- 6 Lower bearing, 1.5" diameter — W532843
- 7 Crown race, for 1.5" diameter lower bearing — W532844

Tools

- 2.5mm hex tool
- Grease

Active Braking Pivot (ABP)

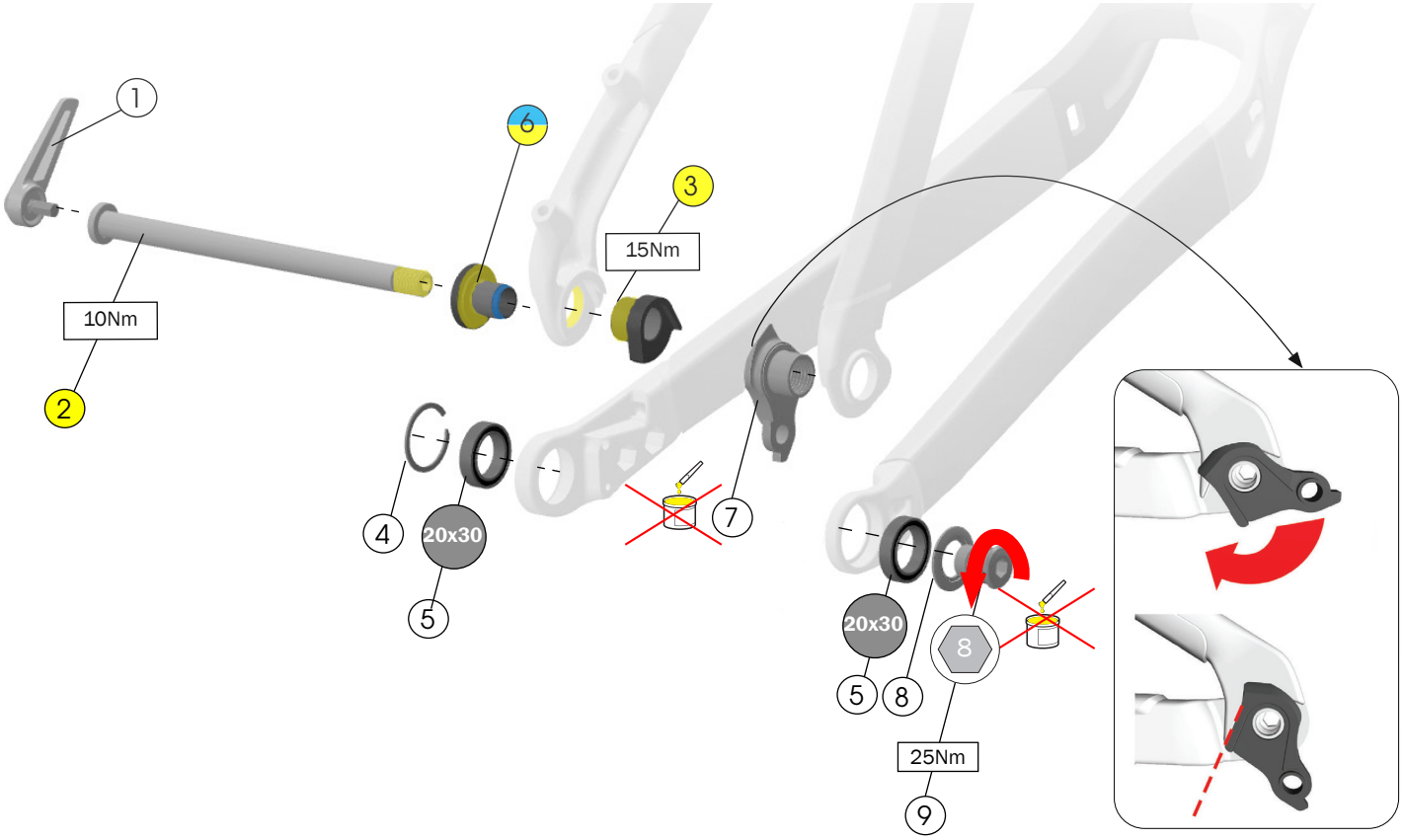

1. Switch lever — W573860
2. Thru axle — W583469
3. Non-driveside ABP dropout nut — W5269707
4. Retaining ring — W5251279
5. Bearings — W5256340
6. Non-driveside ABP bolt — W5251141

— W5272776

7. Derailleur hanger
8. Washer
9. Bolt (left-hand thread)

— W5271425

Tools

- Bearing press, 20x30 drift
- Cassette lockring tool
- Grease
- 8mm hex tool
- Torque wrench (left-hand thread) with 8mm hex bit

This bicycle frame is designed to use a Universal Derailleur Hanger (UDH).

WARNING

Do not apply grease to the derailleur hanger or bolt. Apply grease to only the thru axle.

NOTICE: The washer (8) is frame-specific. Install only the washer compatible with your frame.

NOTICE: Do not over-tighten (9). Over-tightening the bolt could cause the hanger to break.

For additional information about the UDH, refer to the SRAM user manual at www.sram.com.

Rocker pivot and seatstay

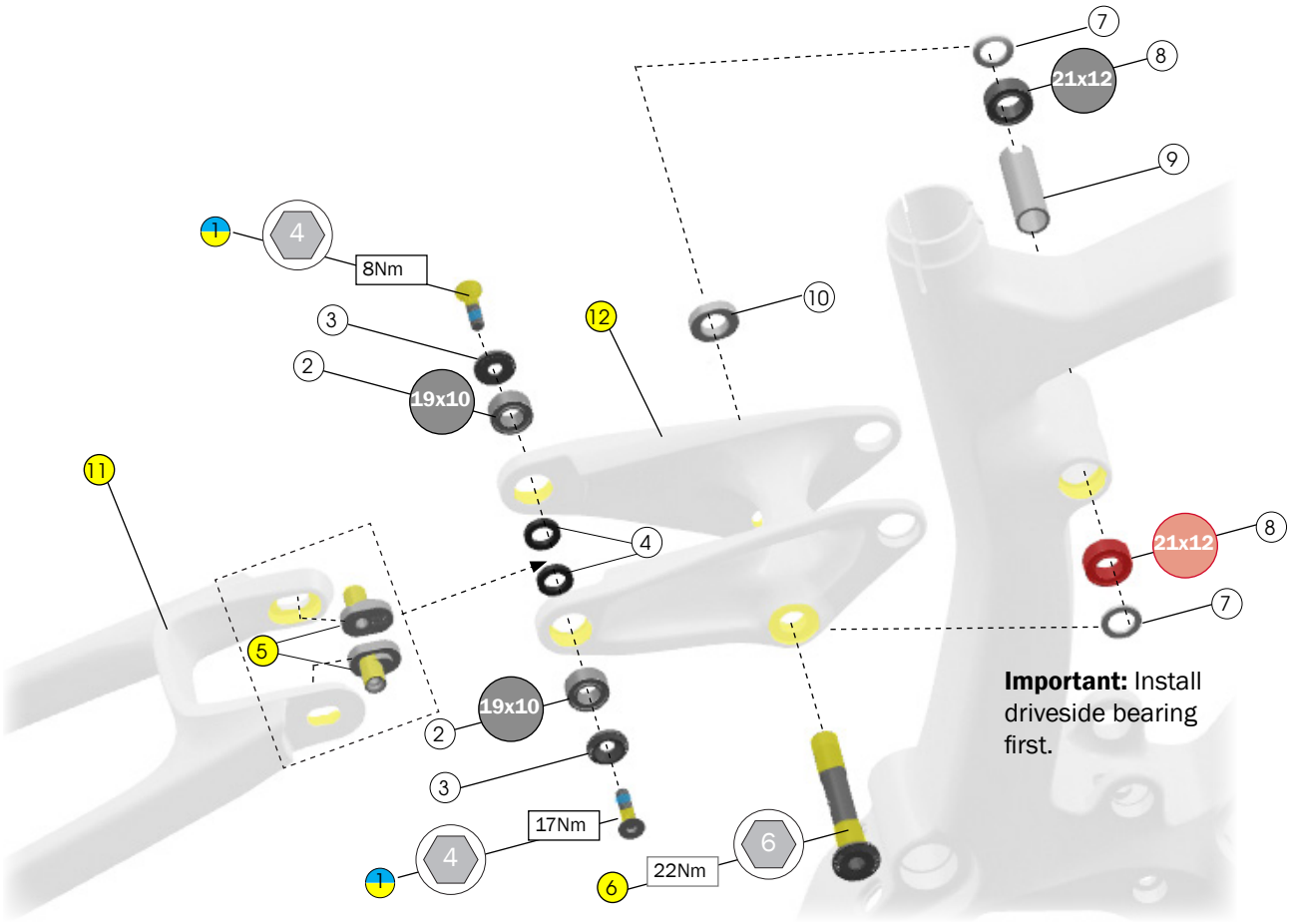

1. Bolts — W5270150
2. Bearings — W5256339
3. Concave washers — W5289553
4. Spacers — W529969
5. Mino links — W5270028
6. Rocker axle — W600627
7. Spacers — W290057
8. Bearings — W5256341
9. Seat tube pivot sleeve — W310155
10. Nut — W311582
11. Seatstay — 44378
    Search trekbikes.com to find the color-matched part for your bike.
12. Rocker link — 37992.
    Search trekbikes.com to find the color-matched part for your bike.

Tools

- Bearing press, 19x10 and 21x12 drifts
- 4mm and 6mm hex wrenches
- Torque wrench with 4mm and 5mm hex bits

Adjust the geometry

Flip the Mino links in the seatstay pivot to change the bike's geometry to fit your riding style or the terrain.

Notice: If using a 29" front wheel and a 27.5" rear wheel, the Mino links must be in the high position.

Steeper head tube angle

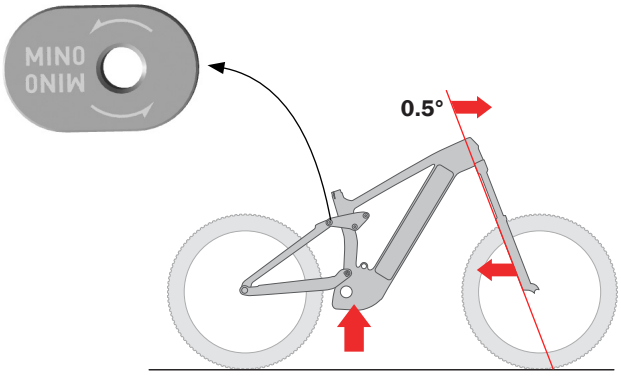

Mino links in the high position

- Pulls in the front fork for quicker steering
- Raises the bottom bracket for improved climbing

Slacker head tube angle

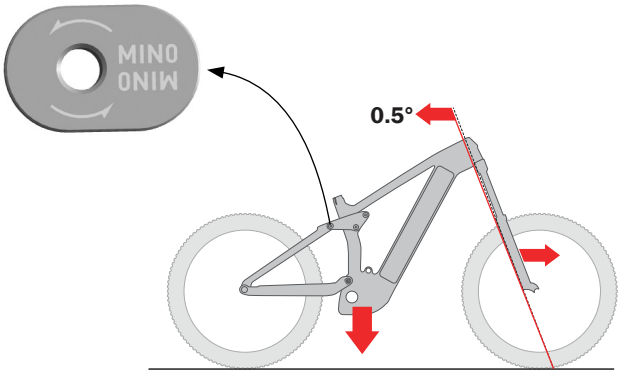

Mino links in the low position

- Pushes the head tube angle back and pushes out the front fork for slower steering that is more stable at high speed
- Lowers the bottom bracket for more stability

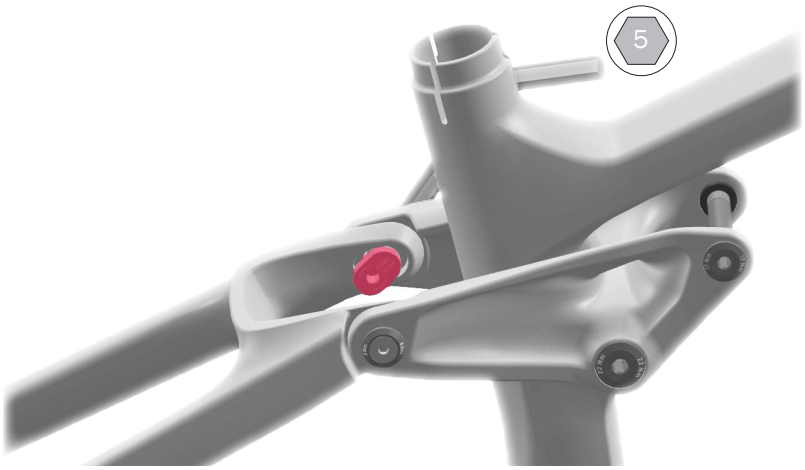

Tools

- 5mm hex tool
- Torque wrench with 5mm hex bit

1. With the bike on the ground, loosen and remove one Mino link chip.
2. Loosen and remove the other Mino link chip.
3. Position the bike:
   Mino links high: Lift the bike by the seat tube. This will pull the rear triangle up and forward.
   Mino links low: With the chips removed, gravity will pull the rear triangle down and back.
4. Place one Mino link chip into the desired position. Slightly tighten the Mino link bolt.
5. Install the other Mino link chip into the same position. Slightly tighten the Mino link bolt.
6. Torque both Mino link bolts to 17Nm.

Main pivot and chainstay

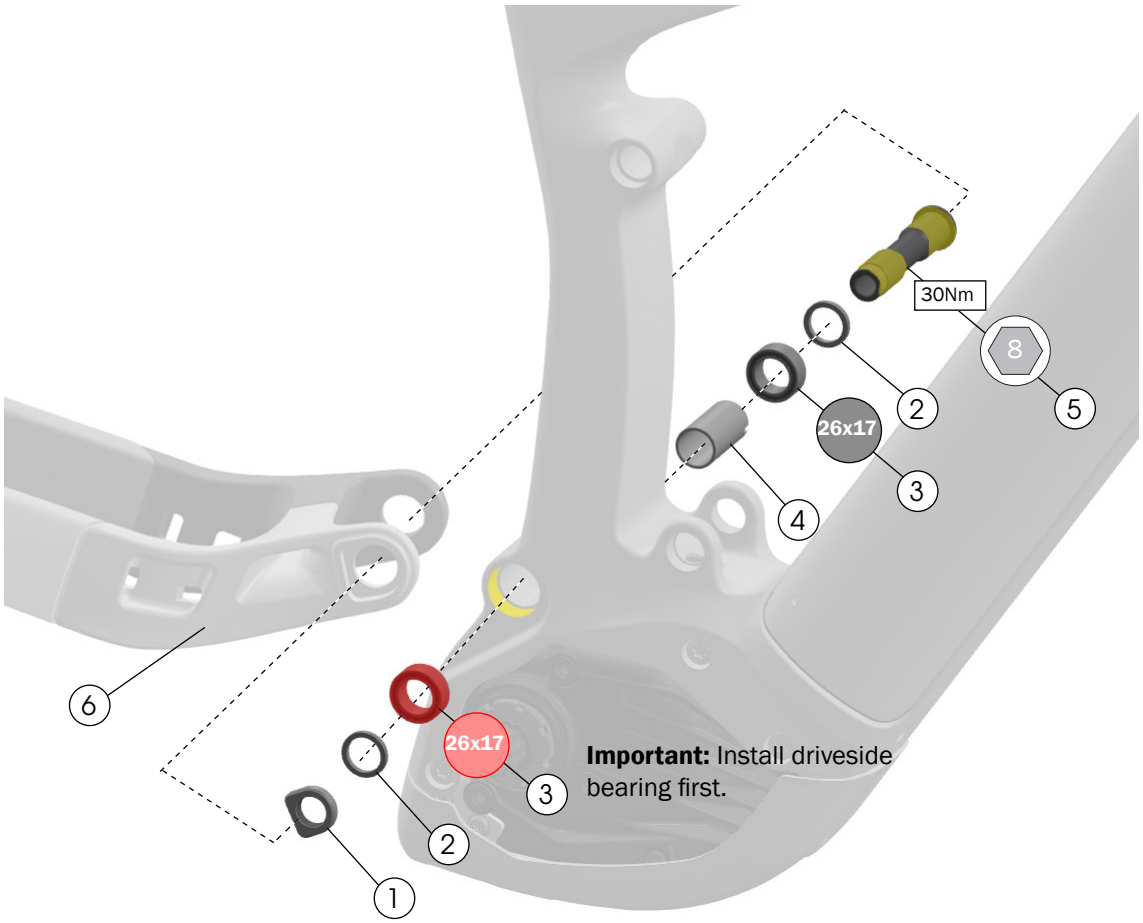

1. Nut — W584134
2. Spacers — W440921
3. Bearings — W5256338
4. Main pivot sleeve — W500592
5. Main pivot axle — W601376

— 599909

6. Chainstay — 44377
   Search trekbikes.com to find the color-matched part for your bike.

Tools

- Bearing press, 26x17 drift
- 8mm hex tool
- Torque wrench with 8mm hex bit
- Grease

Shock mounts

Standard

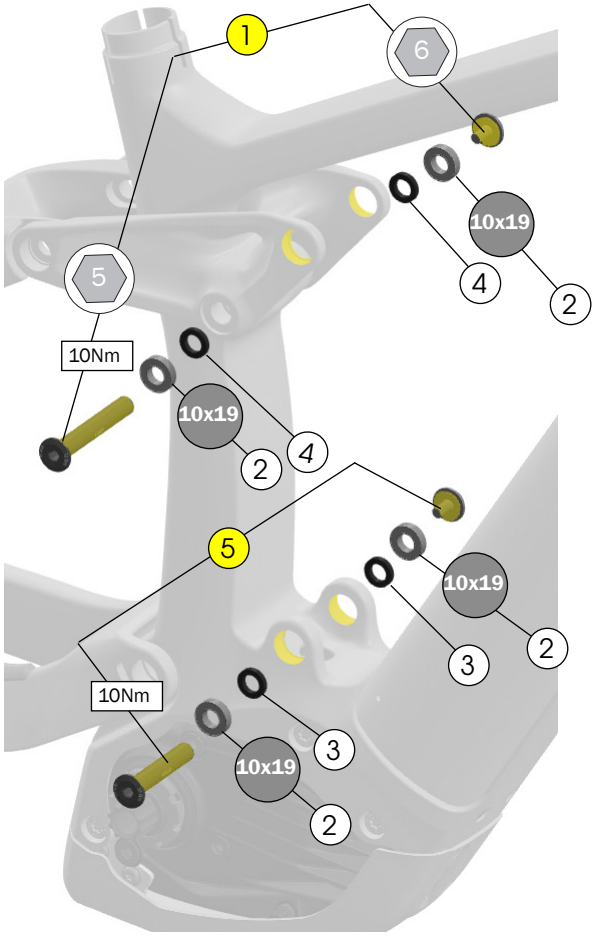

Trunnion

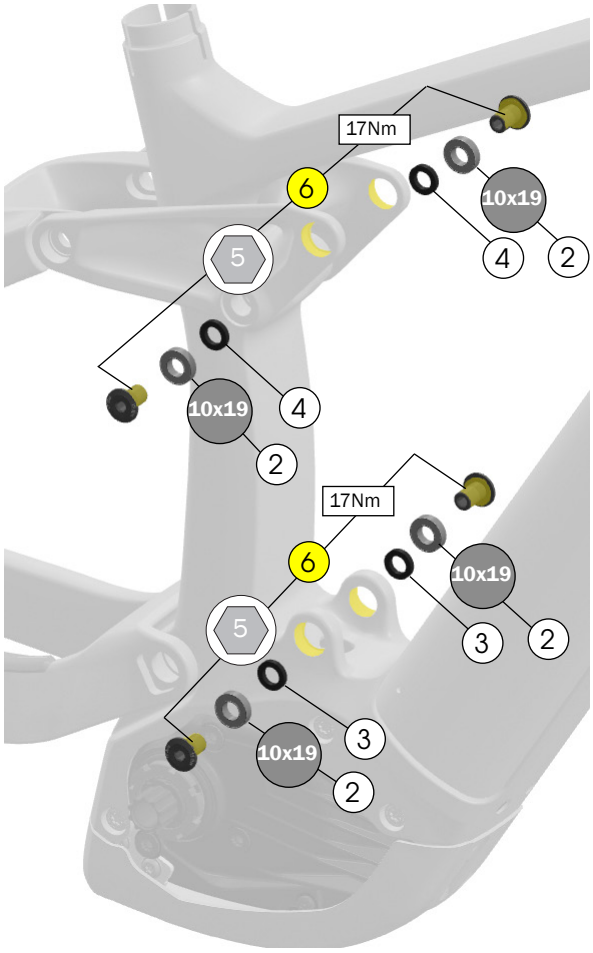

Tools

- Bearing press, 10x19 drift
- 5mm and 6mm hex wrenches
- Torque wrench with 5mm and 6mm hex bits

1. Standard upper shock mount bolt and end cap — 5258209
2. Bearings — W5256337
3. Spacers, 16 x 10 x 5mm — W536414
4. Spacers, 16 x 10 x 3mm — W529969
5. Standard lower shock mount bolts — 599900
6. Trunnion shock mount bolts — W5289626

Dimensions



Shock Dimensions

Eye-to Eye-length: 230mm

Stroke length: 57.5mm

Upper width: 54mm

Lower width: 40mm

Cable routing

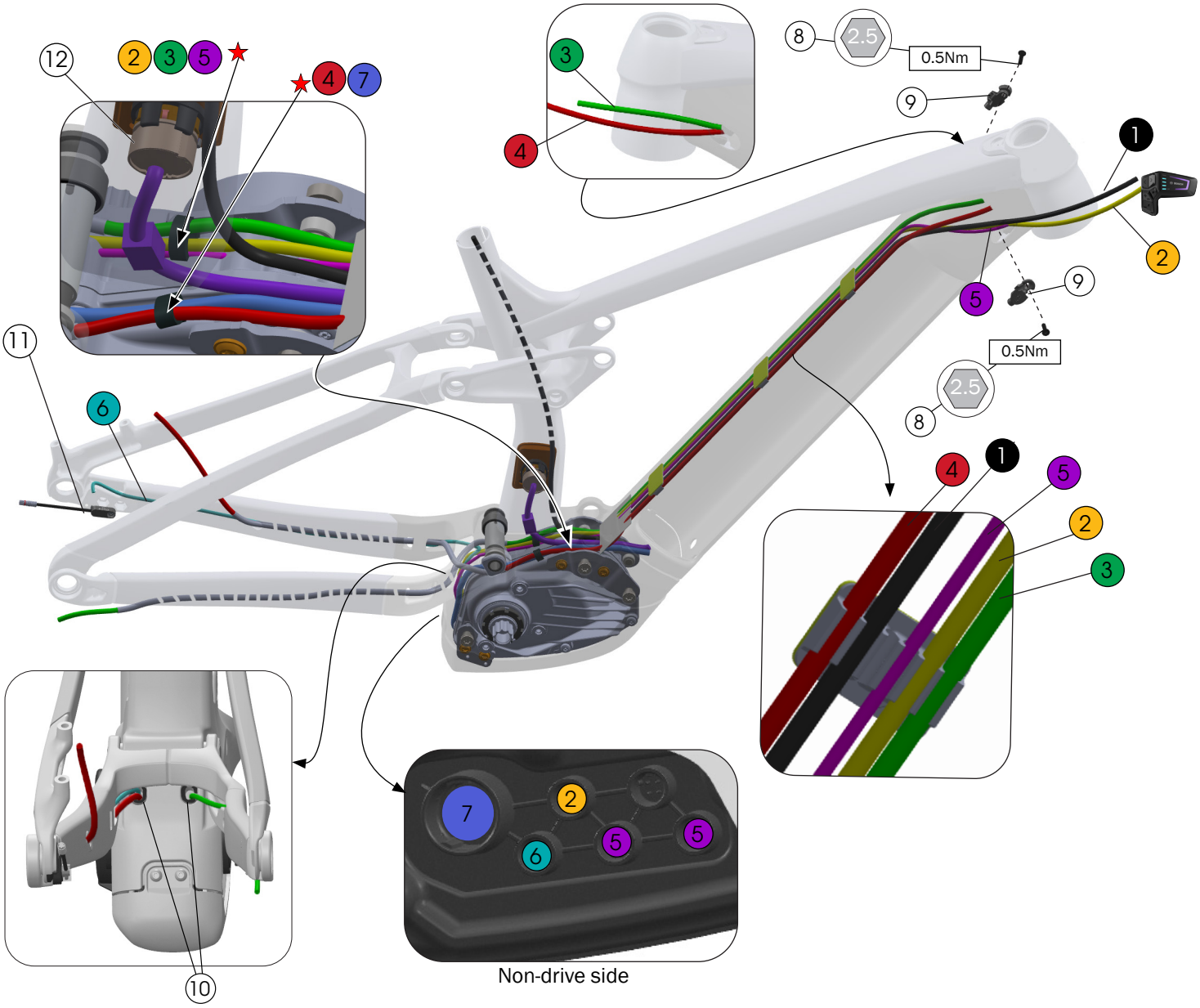

Non-drive side

1 Dropper post housing

2 LED Remote cable — EB12.120.005*

3 Derailleur housing

4 Rear brake hose

5 Light cable(s) (Lights not included)

6 Speed sensor cable

7 Battery power cable — EB12.120.00T*

8 Flat head screws — W532763

9 Cable guides — W519232

10 Cable exit grommets — W5255861

11 Speed sensor assembly — See page 13.

12 Charging cable, 250 mm — EB12.120.02E-97*

★ Zip tie

*Bosch part number. Not available on trekbikes.com.

Frame guards

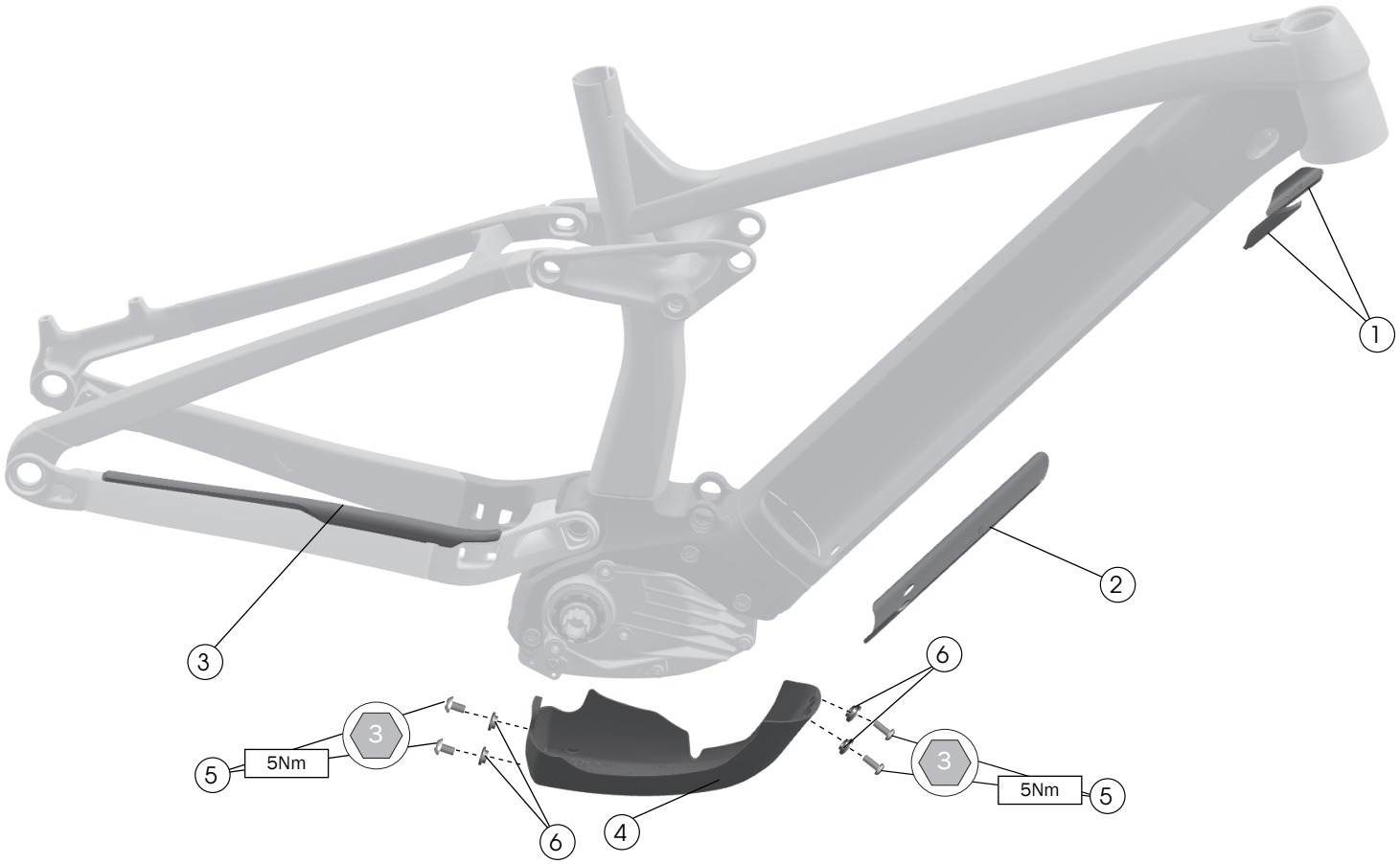

1. Upper down tube guards — 556549
2. Lower down tube guard — W5276240
3. Chainstay guard — W5276239
4. Drive unit guard — W5269899
5. Screws — W549305
6. Top hat spacers — W5272256

Adhesive guards 1 2 3

Use isopropyl alcohol to clean the frame surface where the guards and pads attach. Wait for the alcohol to dry before applying the guards.

Notice: Do not clean the entire frame with isopropyl alcohol. Isopropyl alcohol could damage the paint.

Remote

LED remote

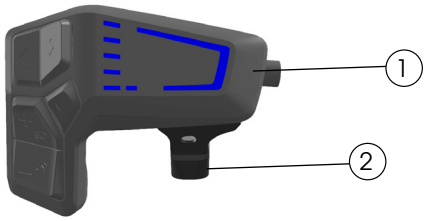

1. LED remote — 5288736
2. LED remote universal clamp — 5288743

   LED Remote cable (See **Cable routing on page 8**) — EB12.120.005*

*Bosch part number. Not available on trekbikes.com.

RIB — battery assembly

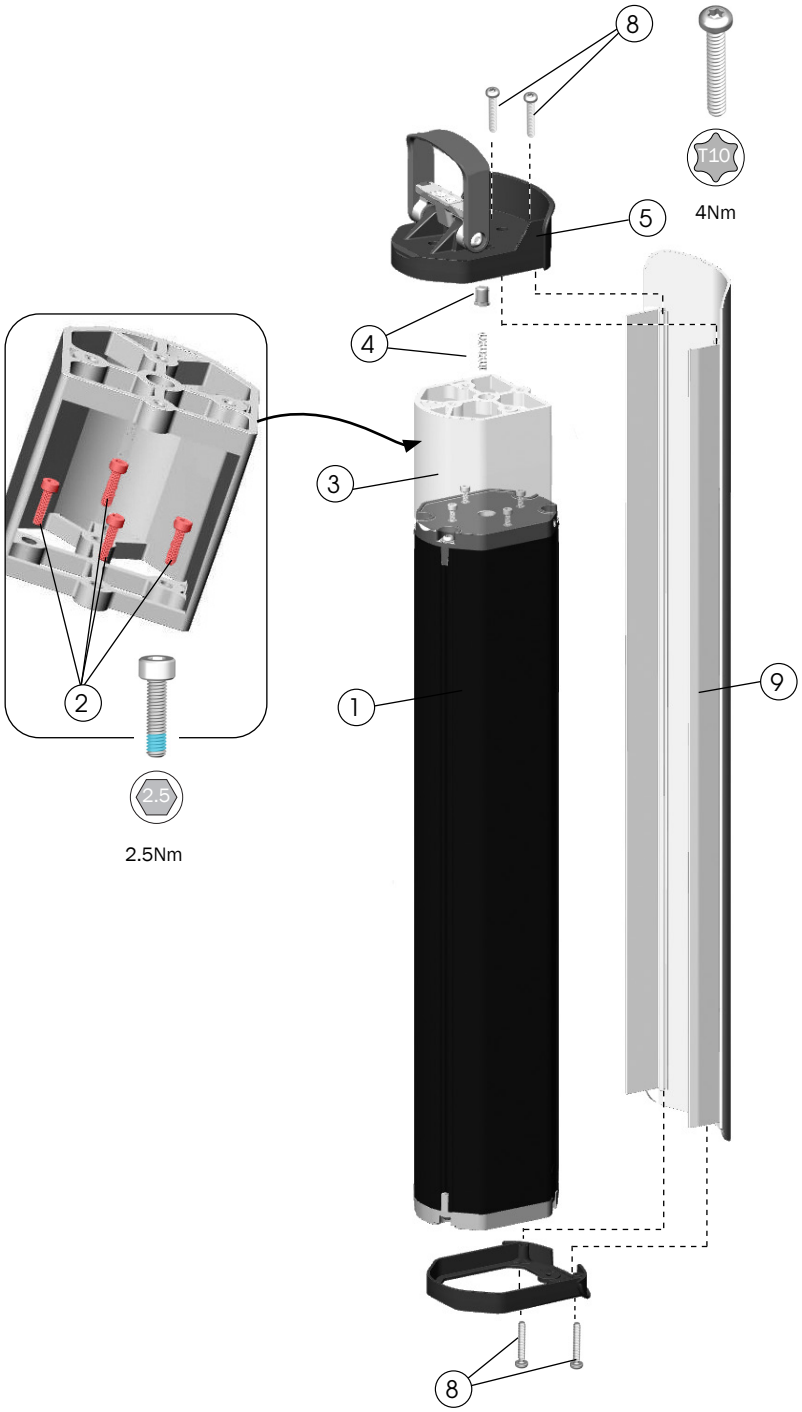

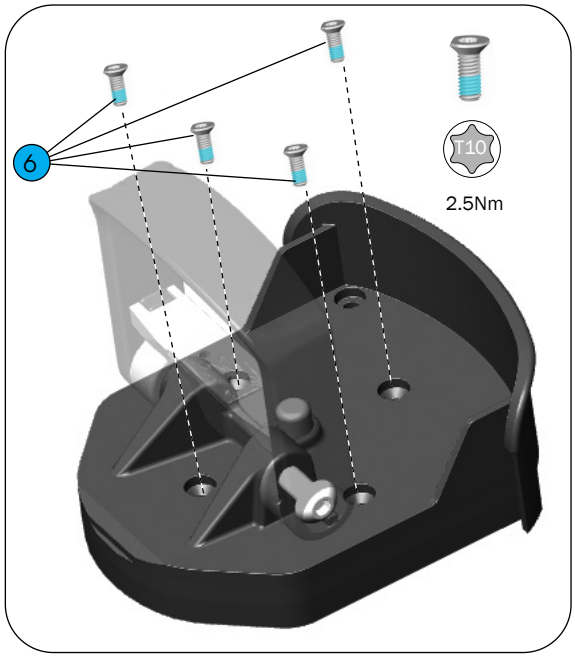

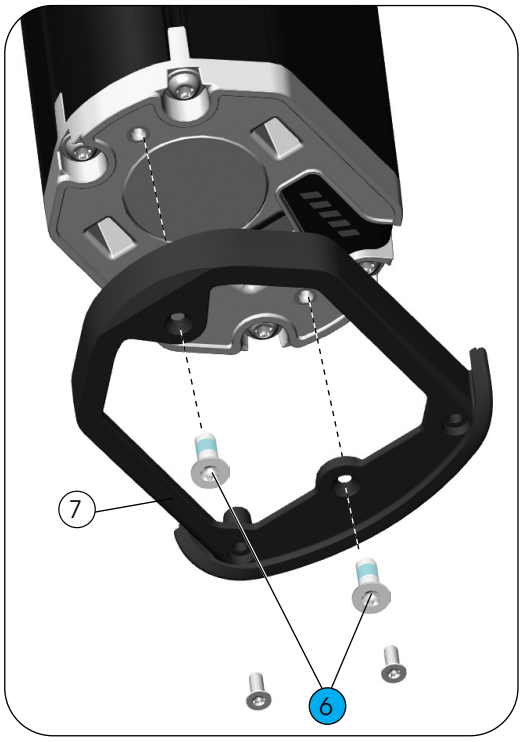

1. Battery, Vertical, Smart System, 500W — EB12.100.018*
   Battery, Vertical, Smart System, 625W — EB12.100.012*
2. Socket head screws, M3x12 — W5257054
3. Spacer (For 500Wh battery) — W5252256
4. Push pin and spring — 5312675
5. Battery handle assembly — W5252236
6. Bolts, M3x8 — W5269016
7. Docking bracket — W5252240
8. Bolts, M3x20 — W5254060
9. Cover, 625W battery — 44371
   Search trekbikes.com to find the color-matched part for your bike.

*Bosch part number. Not available on trekbikes.com.

RIB — docking assembly

Lower assembly

Upper assembly

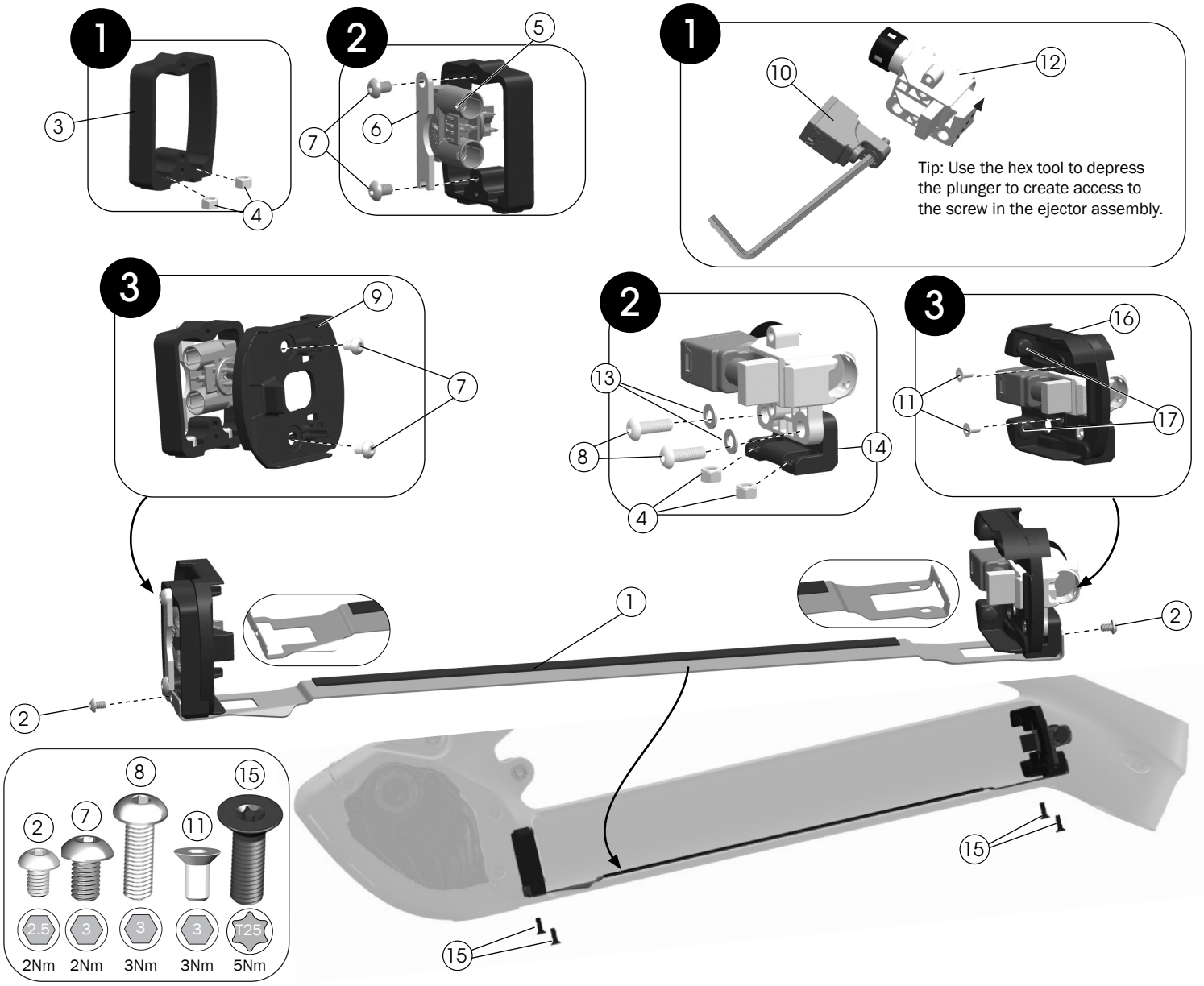

① Alignment plate — W5252805

② Screws
④ Locknuts
⑧ Screws
⑪ Countersunk bolts
⑮ T25 security screws
⑬ Washers
— 5257257

③ Lower docking bracket
⑭ Upper docking bracket
— 5277571

⑤ Battery connection plug — EB12.100.015*

⑥ Power connection retention bracket
⑦ Screws — W549307
— 5312122

⑨ Lower battery mounting plug — W5252293

⑯ Upper lock cover — W5252292

⑰ Bumpers — 579326

⑩ Ejector assembly — 579324

⑫ Lock assembly — W562311

*Bosch part number. Not available on trekbikes.com.

Drive system components

Drive unit and mounting bolts

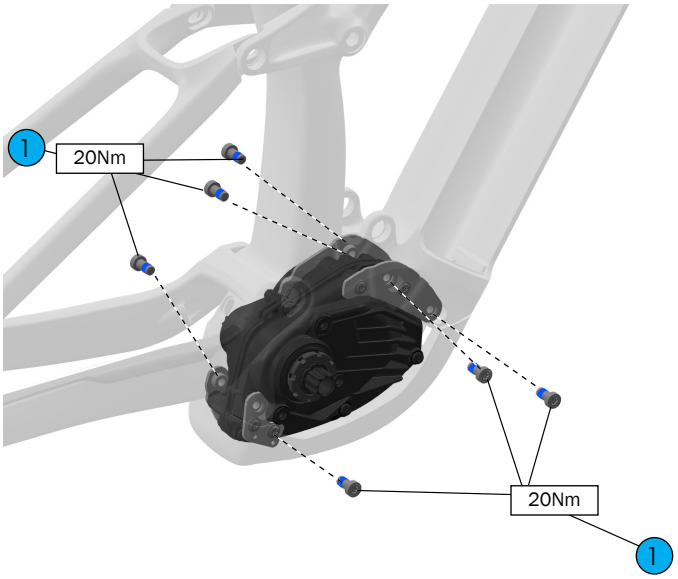

1. Mounting bolts, TP40 — 5265419 (Bosch 1270.016.470)

Battery charge port cover

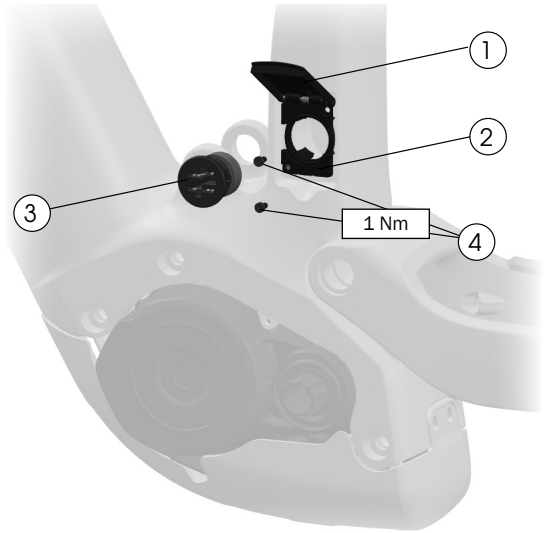

1. Charge port cover — 44374
   Search trekbikes.com to find the color-matched part for your bike.
2. Base — W5251862
3. Charge socket — EB12.120.04A*
4. Bolts — 5284849

*Bosch part number. Not available on trekbikes.com.

Speed sensor

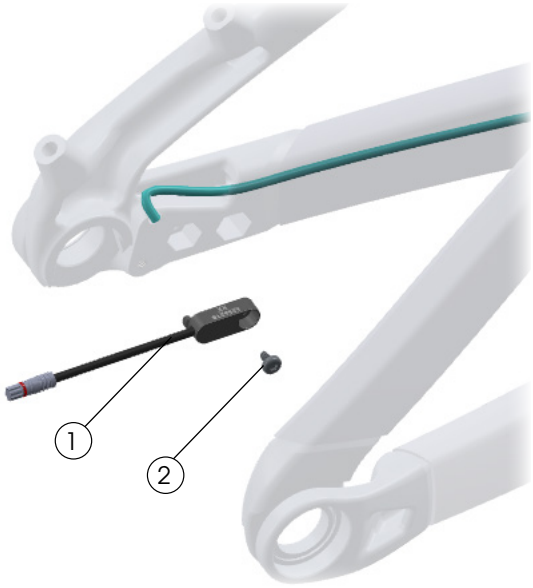

1. Speed sensor — 5284750
2. Bolt — W562831

Specifications

Chainline (1x only)

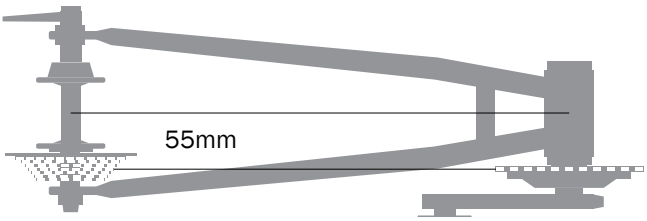

- Boost hub with offset chainring.

Chainring (1x only)

- 34T

Rear brake mount

Minimum	Maximum
180mm, direct mount	Adaptable to 203mm

Maximum tire size

Notice: Measurements of actual tires may vary. Always verify there is sufficient clearance between the tire and the frame. Improper tire size could damage the bicycle frame. Trek recommends 6mm clearance above and on both sides of the tire.

Wheel set	Maximum tire size
29"	29" x 2.6"

Water bottle fit

Small frame: does not have mounts for a water bottle cage.

Seat post

WARNING

Always follow the seatpost manufacturer's minimum insertion recommendation. Failure to follow the recommendation could cause damage to the seatpost and result in injury to the rider.

Measurement		
Maximum insertion	Frame	
	S	220mm
	M	230mm
	L	260mm
	XL	310mm
Seat tube inside diameter		31.6mm
Seat tube post clamp outer diameter		36.4mm

Kickstand mount

- Requires kickstand mounting bracket W581379 and two M6x1.0x25mm bolts

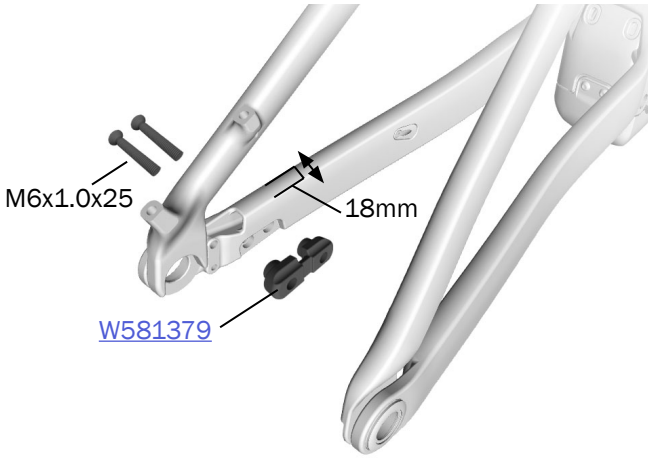

Fork

Refer to the suspension setup card included with your bike or the suspension calculator at

Trekbikes.com/suspension-calculator.

WARNING

Exceeding the recommended maximum fork length could damage the bicycle and result in injury to the rider.

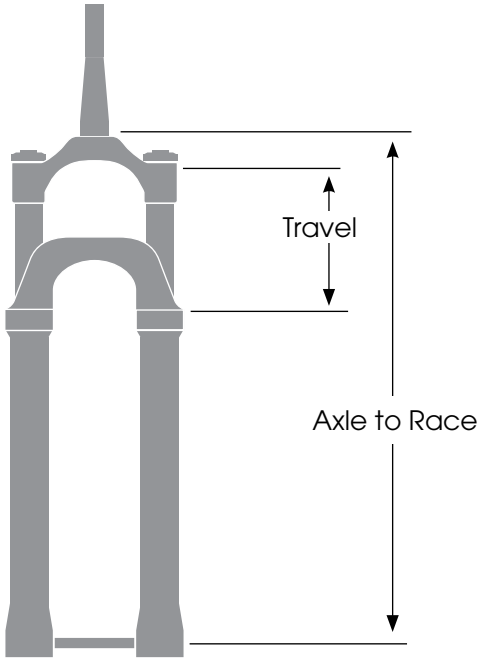

Frame size	Axle to Race (mm)		Travel (mm)
S, M, ML, L, XL	Recommended	570	160
	Maximum	580	170