WIRELESS CHARGING MODULE

CABLE INSTALLATION

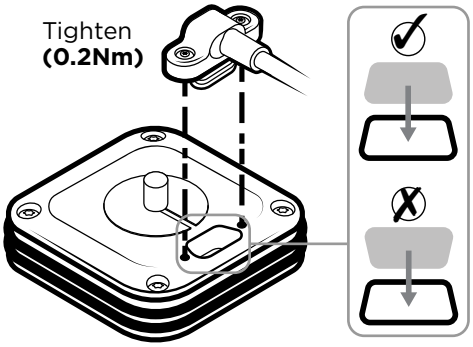

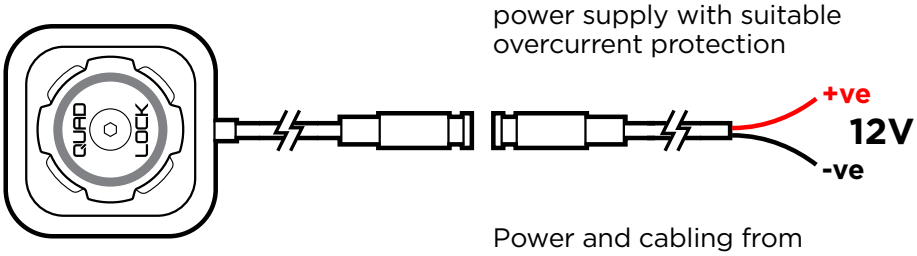

PUCK INSTALLATION

Follow neccessary precautions to avoid electrical shock

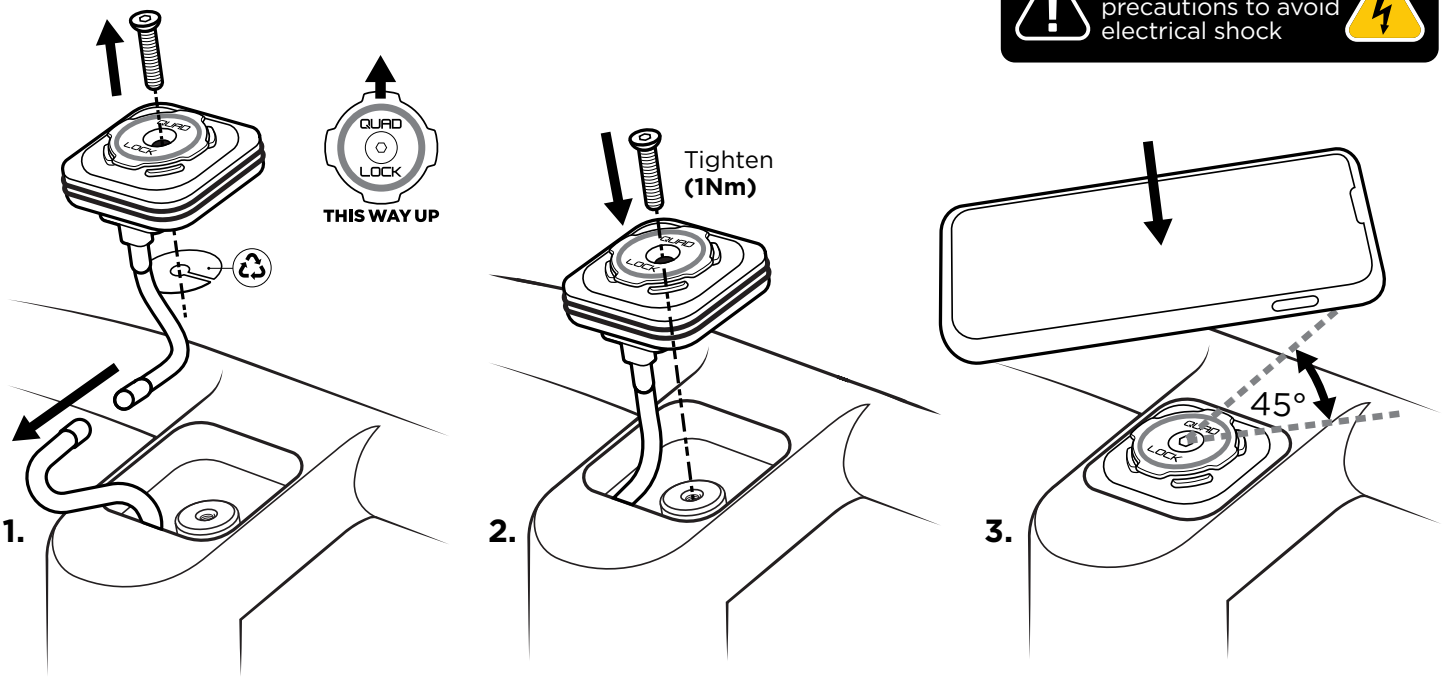

NOTE: This product must be professionally installed by an authorised assembly plant or service centre. Any installation by un-authorised parties will void the product warranty.

EXAMPLE WIRING CONFIGURATIONS

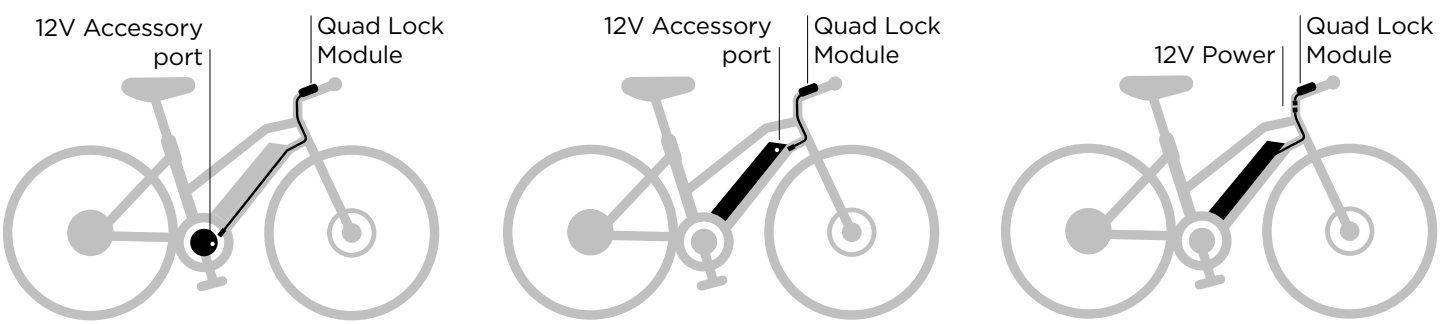

1. MID DRIVE MOTOR

2. HUB MOTOR

3. CONNECT AT STEM

TROUBLESHOOTING

1. Is the Drive System OK?
2. Is the Power on?
3. Is the Battery charged?

Check drive system manual and resolve any issues

4. Check 12V power at Connector
5. Replace Cable
6. Replace Charging Module

Follow neccessary precautions to avoid electrical shock

TECHNICAL SPECIFICATIONS

SKU	QLO-WCM-1800	QLO-WCM-1000
Model	QL-5289	QL-5290
Model Name	OEM Wireless Charger 12V 1.8A Input	OEM Wireless Charger 12V 1.0A Input
Input Voltage	12V DC	12V DC
Input Current	1.8A Max @12V	1.0A Max @12V
Input Connection	2-wire - GND, +12V	2-wire - GND, +12V
Output Power	5W / 7.5W / 10W / 15W	5W / 7.5W
Operating Temperature	-10°C to +40°C at RH ≤ 95%	
Efficiency	Up to 70% at maximum load (15W output) @ +23°C ambient	
Standby Current	40mA	
Phone Charging	Apple : Up to 7.5W Fast Charging Samsung : Up to 10W Fast Charging Google : Up to 15W Fast Charging Huawei : Up to 15W Fast Charging	Apple : Up to 7.5W Fast Charging Samsung : Up to 7.5W Fast Charging Google : Up to 7.5W Fast Charging Huawei : Up to 7.5W Fast Charging
Electronics Protection	Reverse polarity protection Overvoltage/Undervoltage protection Overcurrent protection Transient spike protection Overtemperature protection – 2-stage Foreign Object Protection (FOD) – detects presence of metal objects in proximity above charger and limits power output from coil to prevent overheating	
Certification	**FCC ID:** 2AOU9-QLO **IC:** 27134-QLO QLO-WMC-1800 (Model No: QL-5289) - **CCAN23LP0490T4** QLO-WMC-1000 (Model No: QL-5290) - **CCAN23LP0491T6** R3C433 RoHS	
Water resistance	IP67	
Dimensions	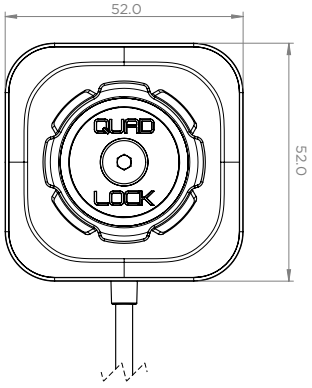 Right-Angle Cable 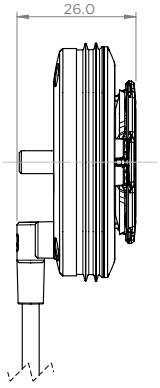 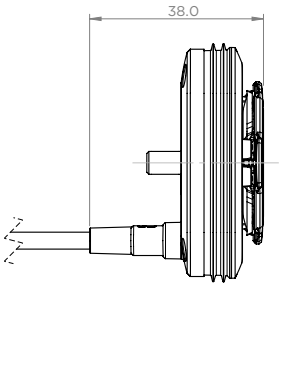 Vertical Cable	
Product Weight (kg)	0.080 kg	

DEVICE COMPATIBILITY

All devices must be using a dedicated Quad Lock Case (Original or MAG) to ensure optimal charging and mounting experience.
(As at March 2023).

APPLE

iPhone 14 Pro
iPhone 14 Pro Max
iPhone 14
iPhone 14 Plus
iPhone 13 Pro
iPhone 13 Pro Max
iPhone 13
iPhone 13 mini
iPhone SE (3rd Gen)
iPhone 12 Pro
iPhone 12 Pro Max
iPhone 12
iPhone 12 mini
iPhone 11 Pro
iPhone 11 Pro Max
iPhone 11
iPhone SE (2nd Gen)
iPhone XS
iPhone XS Max
iPhone XR
iPhone X
iPhone 8
iPhone 8 Plus

SAMSUNG

Galaxy S23
Galaxy S23+
Galaxy S23 Ultra
Galaxy S22
Galaxy S22+
Galaxy S22 Ultra
Galaxy S21 FE
Galaxy S21
Galaxy S21+
Galaxy S21 Ultra
Galaxy Note20
Galaxy Note20 Ultra
Galaxy S20 FE
Galaxy S20
Galaxy S20+
Galaxy S20 Ultra
Galaxy Note10
Galaxy Note10+
Galaxy Note9
Galaxy S10
Galaxy S10+
Galaxy S10e
Galaxy S9
Galaxy S9+
Galaxy S8
Galaxy S8+

GOOGLE

Pixel 7
Pixel 7 Pro
Pixel 6
Pixel 6 Pro
PIxel 5
Pixel 4
Pixel 4XL
Pixel 3
Pixel 3 XL

HUAWEI

Huawei P40 Pro
Huawei P30 Pro

WIRELESS CHARGING FUNCTIONALITY IS <u>NOT</u> COMPATIBLE WITH QUAD LOCK UNIVERSAL ADAPTORS

CERTIFICATION

Annex products Pty Ltd, Australia, declares that the product "OEM Wireless Charger 12V" is in compliance with RED Directive (2014/53/EU).
The CE certificate of conformity can be found at:
www.quadlock.com.au/compliance

Annex products Pty Ltd, Australia, declares that the product "OEM Wireless Charger 12V" is in compliance with the following Directives: Radio Equipment Regulations 2017, electrical Equipment (Safety) Regulations 2016 and The Restrictions of the Use of Certain Hazardous Substances in Electrical and Electronic Equipment 2012.
The certificate of conformity can be found at:
www.quadlock.com.au/compliance

H-Field	-19.26dBuA/m at 10m
Frequency band	104.60kHz to 173.60kHz

INDUSTRIE CANADA (IC: 27134-QLO)

IC Caution:
This device contains licence-exempt transmitter(s) that comply with Innovation, Science and Economic Development Canada's licence-exempt RSS(s). Operation is subject to the following two conditions:

(1) this device may not cause interference,

(2) this device must accept any interference, including interference that may cause undesired operation of the device.

RF Exposure Statement:
This equipment complies with ISED radiation exposure limits set forth for an uncontrolled environment. This equipment should be installed and operated with a minimum distance of 20cm between the radiator and a human body.

IC Caution:
L'émetteur exempt de licence contenu dans le présent appareil est conforme aux CNR d'Innovation, Sciences et Développement économique Canada applicables aux appareils radio exempts de licence. L'exploitation est autorisée aux deux conditions suivantes :

(1) L'appareil ne doit pas produire de brouillage;

(2) L'appareil doit accepter tout brouillage radioélectrique subi, même si le brouillage est susceptible d'en compromettre le fonctionnement.

Déclaration d'exposition aux RF :
Cet équipement est conforme aux limites d'exposition aux rayonnements ISED établies pour un environnement non contrôlé. Cet équipement doit être installé et utilisé avec une distance minimale de 20 cm entre le radiateur et un corps humain.

This device complies with part 15 of the FCC Rules. Operation is subject to the following two conditions:

(1) This device may not cause harmful interference, and

(2) this device must accept any interference received, including interference that may cause undesired operation.

NOTE: This equipment has been tested and found to comply with the limits for a Class B digital device, pursuant to part 15 of the FCC Rules. These limits are designed to provide reasonable protection against harmful interference in a residential installation.

This equipment generates, uses and can radiate radio frequency energy and, if not installed and used in accordance with the instructions, may cause harmful interference to radio communications. However, there is no guarantee that interference will not occur in a particular installation.

If this equipment does cause harmful interference to radio or television reception, which can be determined by turning the equipment off and on, the user is encouraged to try to correct the interference by one or more of the following measures:

— Reorient or relocate the receiving antenna.

— Increase the separation between the equipment and receiver.

— Connect the equipment into an outlet on a circuit different from that to which the receiver is connected.

— Consult the dealer or an experienced radio/TV technician for help.

Changes or modifications not expressly approved by the party responsible for compliance could void the user's authority to operate the equipment.

This equipment complies with FCC radiation exposure limits set forth for an uncontrolled environment. This equipment should be installed and operated with a minimum distance of 20cm between the radiator and a human body.