

2025 Procaliber Carbon — Gen 3

SERVICE MANUAL

Contents



[Rear axle and derailleur]

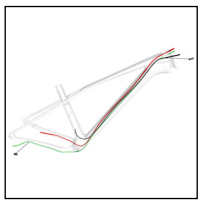

[Routing]



[Frame guards]

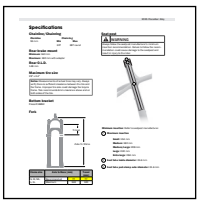

[Specifications]

Safety

⚠ WARNING

Properly tighten hardware

Always tighten hardware to the specified torque. Over-tightening hardware could deform or break the hardware or components. Under-tightening hardware could cause hardware or components to become loose. Either situation could damage the bicycle and result in injury to the rider.

⚠ WARNING

Reapply threadlocker

All reused-fasteners with pre-applied threadlocker must be cleaned with isopropyl alcohol and have new threadlocker applied before re-assembly. If threadlocker is not applied, the fasteners may loosen which could damage the bicycle and result in injury to the rider.

Legend

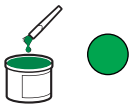

Apply grease



Do not apply grease

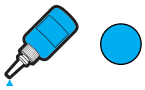

Apply threadlocker

Nm — Torque

★ Zip tie

Scope

This manual contains parts diagrams, specifications (such as grease and torque values), instructions, and helpful tips. It does not contain instructions for all components. Refer to the original manufacturer for more information.

Additional resources

- Bicycle Owner's Manual: *trekbikes.com/manuals*
- Trek's YouTube channel: *youtube.com/trekbikes*

Copyright 2024 Trek Bicycle Corporation All Rights Reserved

Rear axle and derailleur

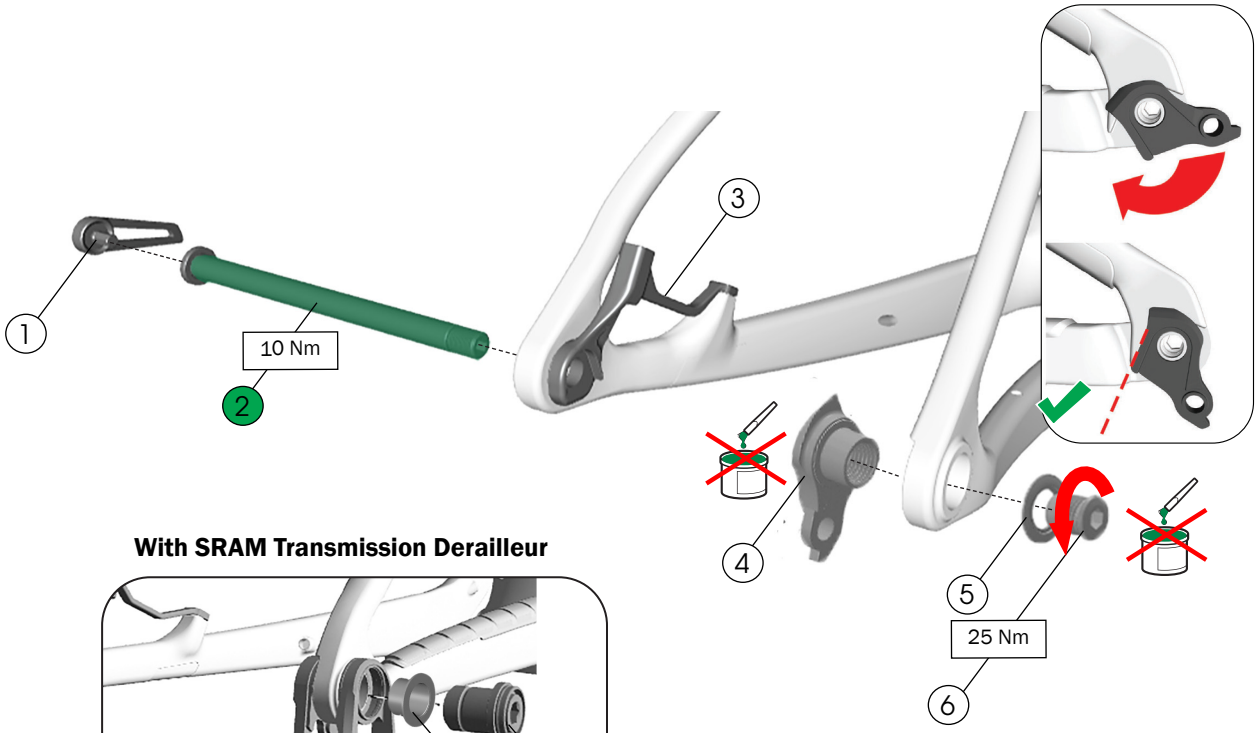

With SRAM Transmission Derailleur

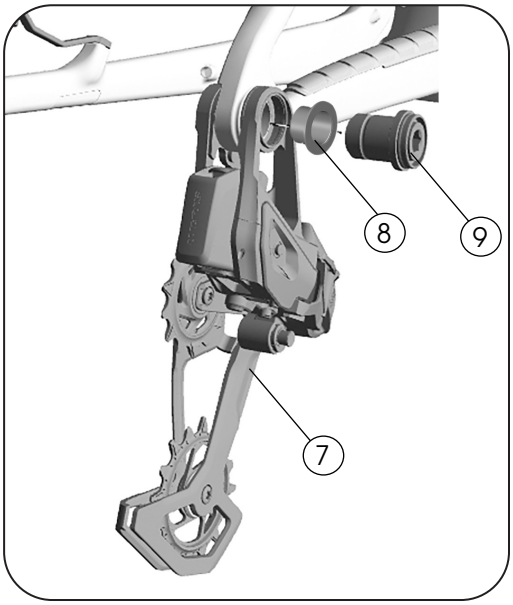

1. Switch lever — *W573860*
2. Thru axle, 12 x 180 mm — *W5290786*
3. Dropout brake mount — *W5317630*
4. Derailleur hanger
   NOTICE: Do not apply grease.
5. Washer, 25 mm
   NOTICE: The washer is frame-specific. Install only the washer size specified.
6. Bolt, M12
   NOTICE: Do not apply grease. Do not overtighten. Overtightening may damage the hanger.

— *W5271424*

7. SRAM Transmission Derailleur
8. Bushing
9. Mounting bolt

— Refer to information on *sram.com.*

Routing

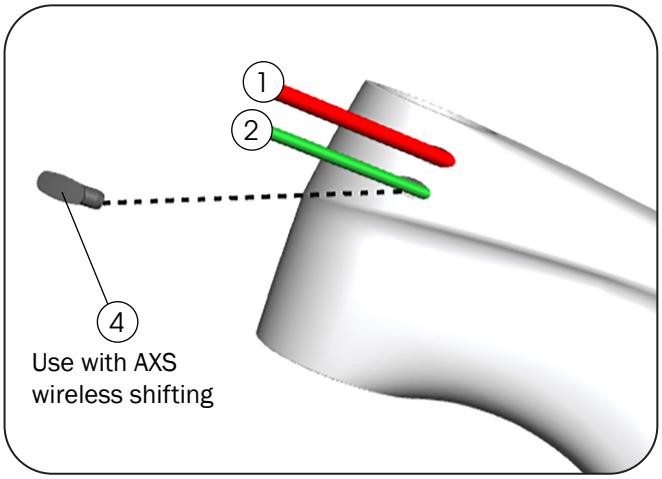

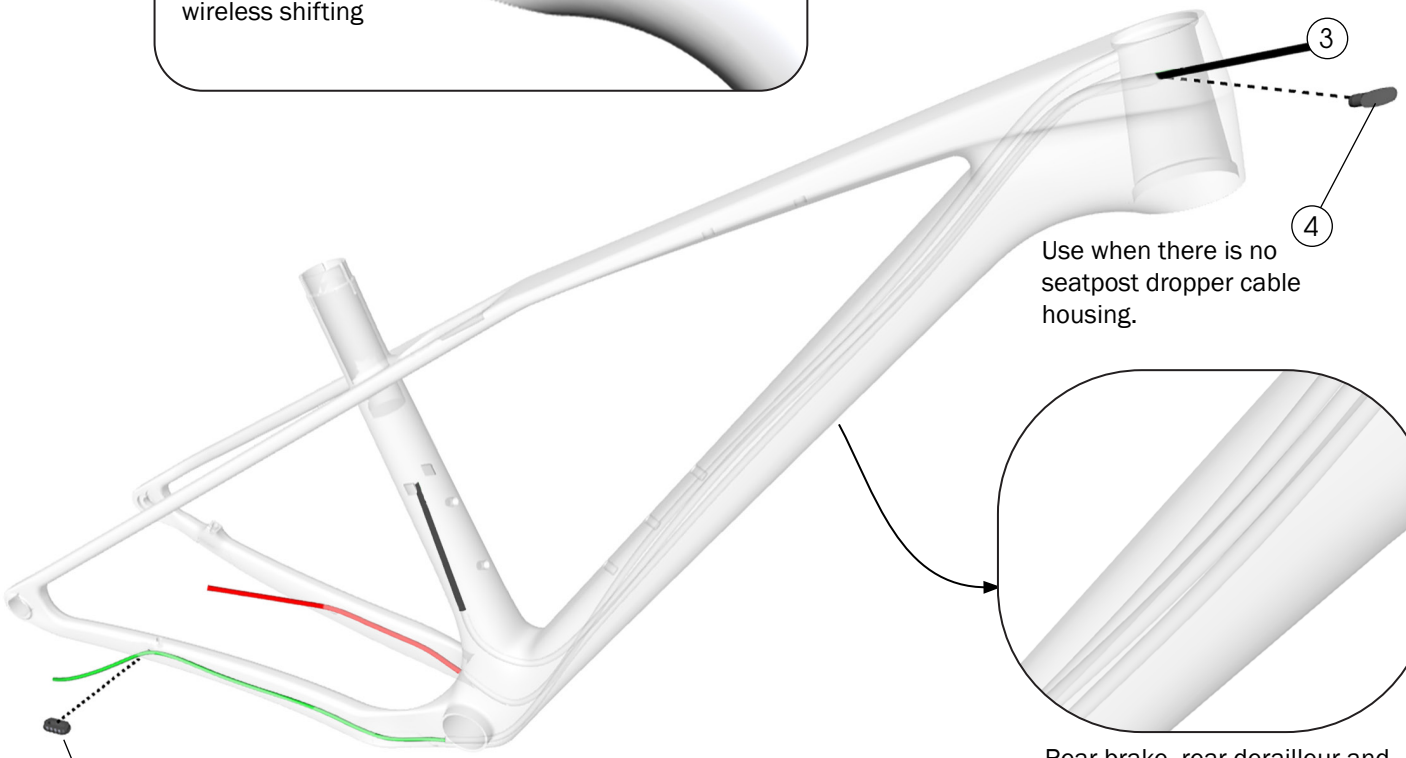

Rear brake, rear derailleur and
seatpost dropper internal guide tubes

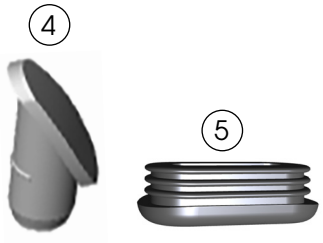

1. Rear brake hose
2. Rear derailleur cable housing
3. Seatpost dropper cable housing
4. Cable housing plugs — *W600649*
5. Chainstay plug — *W5259425*

Frame guards

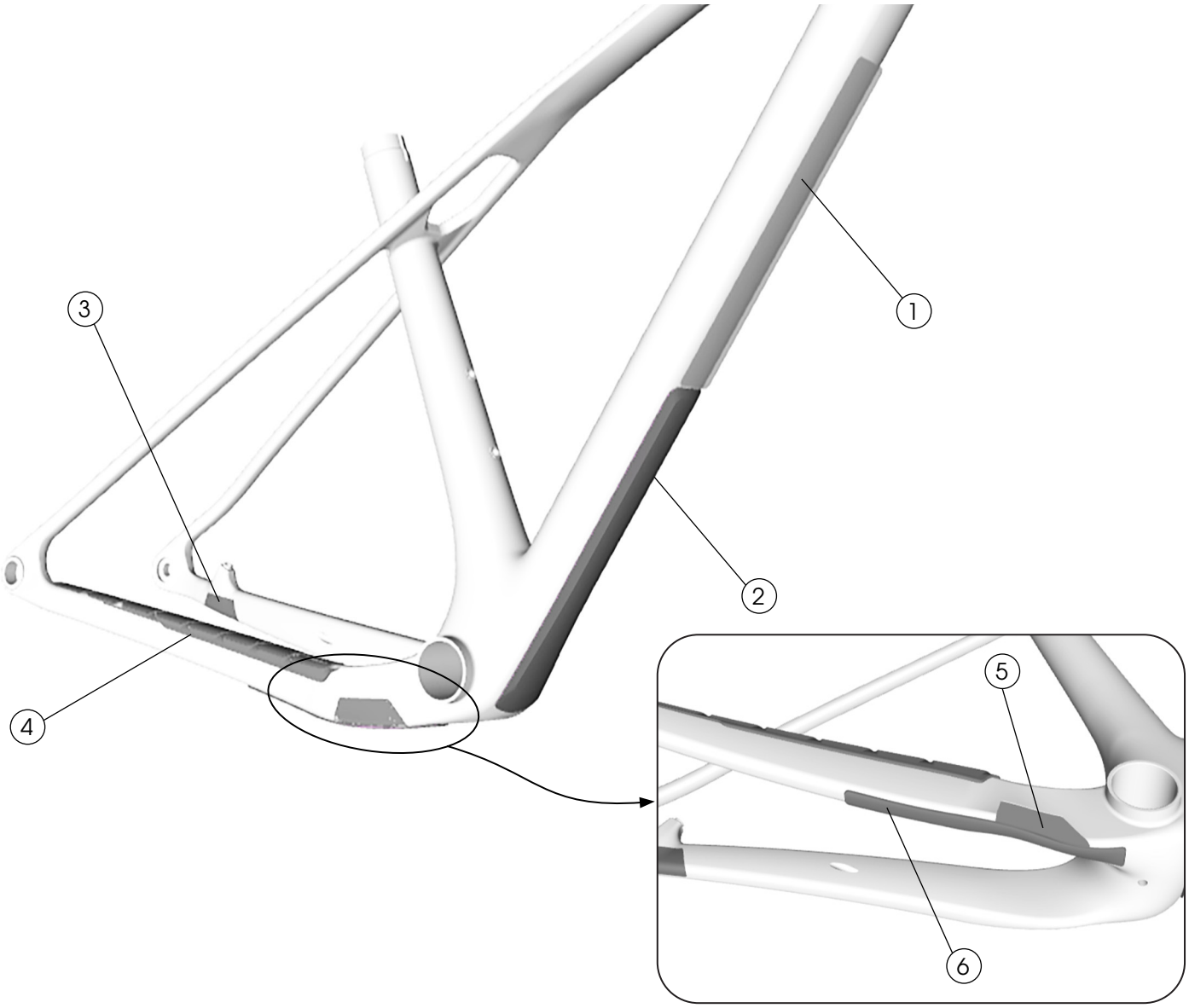

1. Upper down tube guard — W5316401
2. Lower down tube guard — W5316400
3. Rotor strike guard — W5315731
4. Chainstay guard — W5307370
5. Chainstay strike guard — W5315730
6. Lower chainstay guard — W5316766

Adhesive guards 1 2 4 6

Use isopropyl alcohol to clean the frame surface where the guards attach. Wait for the alcohol to dry before applying the guards.

NOTICE: Do not clean the entire frame with isopropyl alcohol. Isopropyl alcohol could damage the paint.

Bonded guard 3 5

1. To improve adhesion, use sandpaper to roughen the backside of the guard and/or remove remnants of the old epoxy.
2. Attach the guard with a two-part epoxy.
3. Allow the guard and epoxy to cure for 24 hours.

Specifications

Chainline/Chainring

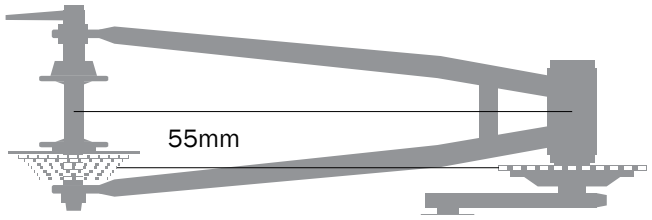

Chainline	Chainring	
55 mm	**Min**	**Max**
	30T	38T round

Rear brake mount

Minimum: 160 mm

Maximum: 180 mm with adapter

Rear O.L.D.

148 mm

Maximum tire size

29" x 2.4"

Notice: Measurements of actual tires may vary. Always verify there is sufficient clearance between the tire and the frame. Improper tire size could damage the bicycle frame. Trek recommends 6 mm clearance above and on both sides of the tire.

Fork

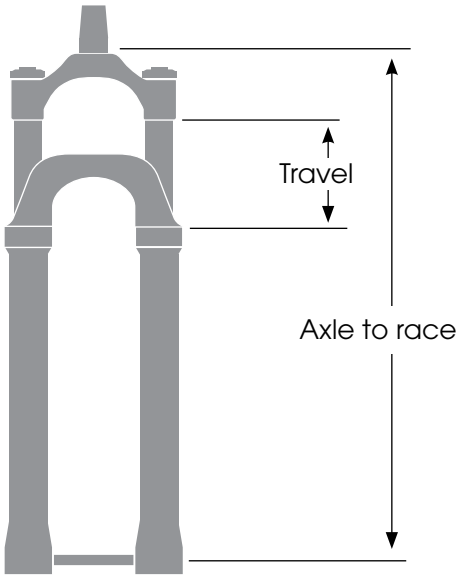

Frame size	Fork	Min	Max (recommended)
S, M, ML, L, XL	Axle to race	523 mm	533 mm
	Travel	110 mm	130 mm

Seatpost

WARNING

Always follow the seatpost manufacturer's minimum insertion recommendation. Failure to follow the recommendation could cause damage to the seatpost and result in injury to the rider.

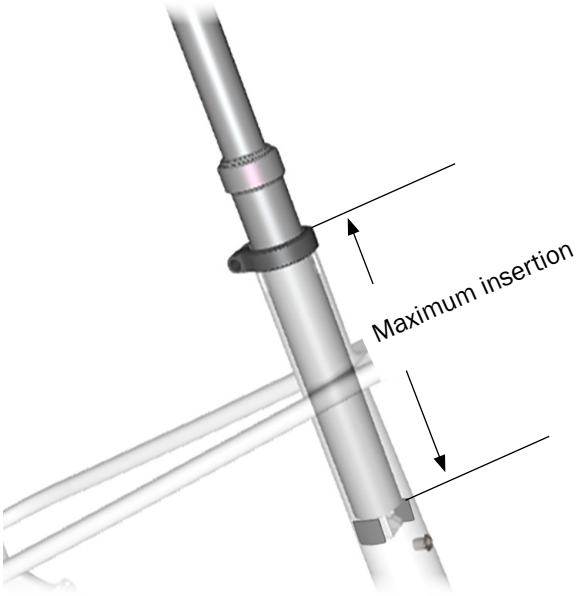

Maximum insertion

Small: 154 mm

Medium: 182 mm

Medium/Large: 208 mm

Large: 230 mm

Extra large: 284 mm

Seat tube inner diameter: 31.6 mm

Seat tube outer diameter: 36.2 mm

Bottom bracket

Press-fit BB92

