

2025 Powerfly+ Full Suspension — Gen 4

SERVICE MANUAL

Contents

Safety



Safety

Linkage

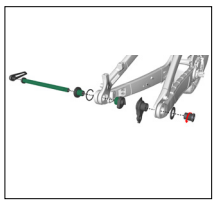

Active Braking Pivot

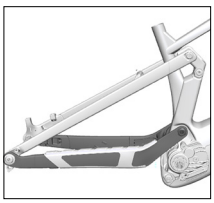

Main pivot and chainstay

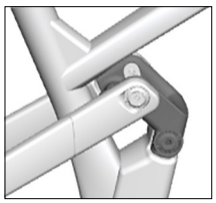

Flapper link

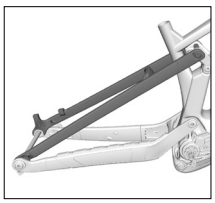

Seatstay

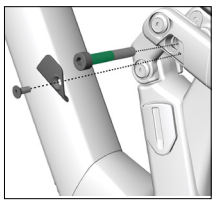

Shock mounts

Routing

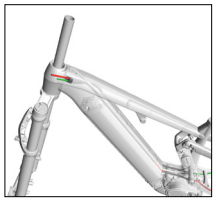

Brake and mechanical shift routing

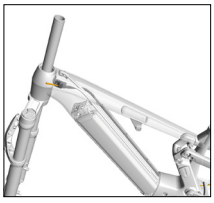

AXS wired shift routing

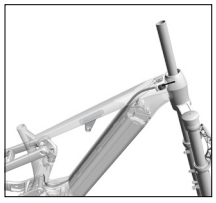

Seatpost dropper routing

Torque order

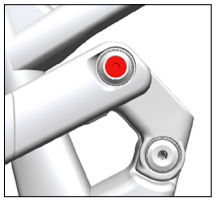

Torque order

E-system

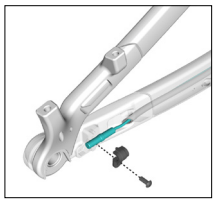

Speed sensor routing

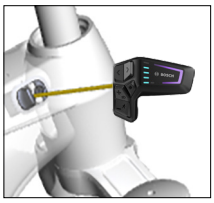

Remote routing

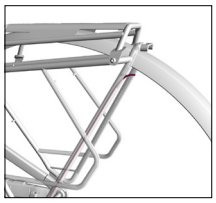

Rear light routing

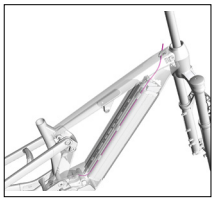

Front light routing

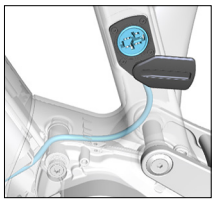

Charge port



Motor connection, bolts and cover



RIB 2.0

Guards, rack and fenders

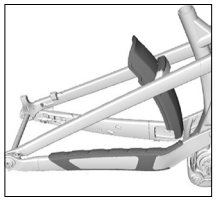

Frame guards and mini fender

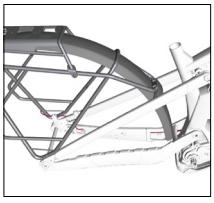

Rear fender and rack



Front fender

Specs

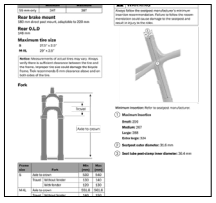

Specifications

Copyright 2024 Trek Bicycle Corporation All Rights Reserved

Safety

WARNING

Properly tighten hardware

Always tighten hardware to the specified torque. Over-tightening hardware could deform or break the hardware or components. Under-tightening hardware could cause hardware or components to become loose. Either situation could damage the bicycle and result in injury to the rider.

WARNING

Reapply threadlocker

All reused-fasteners with pre-applied threadlocker must be cleaned with isopropyl alcohol and have new threadlocker applied before re-assembly. If threadlocker is not applied, the fasteners may loosen which could damage the bicycle and result in injury to the rider.

Scope

This manual contains parts diagrams, specifications (such as grease and torque values), instructions, and helpful tips. It does not contain instructions for all components (such as brake calipers). Refer to the original manufacturer for more information.

Legend

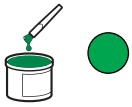
Apply grease


Do not apply grease


Apply threadlocker

Nm — Torque

Zip tie

Inspect the bike

Please inspect the bicycle carefully after removal from the box and all packaging:

Inspect all surfaces of the bicycle for damage, pay spe¬cial attention to the fork legs and the seat stays (both inside and outside surfaces).

If packaging damage is located near the front of the bicycle, remove the fork from the frame and inspect the steerer tube for damage.

Additional resources

Trek Resources on *trekbikes.com/manuals*

- Trek Bicycle Owner's Manual
- The Quick Start Guide for the Bosch e-system used on this bicycle
- The RIB 2.0 battery and battery dock instructions
- The Bosch E-bike Comprehensive Owner's Manual

Trek's YouTube channel: *youtube.com/trekbikes*

Bosch resources

- The Bosch Dealer manual found on the Bosch Dealer Portal
- The Bosch website: *bosch-ebike.com*

Active Braking Pivot

See *Torque order on page 8.*

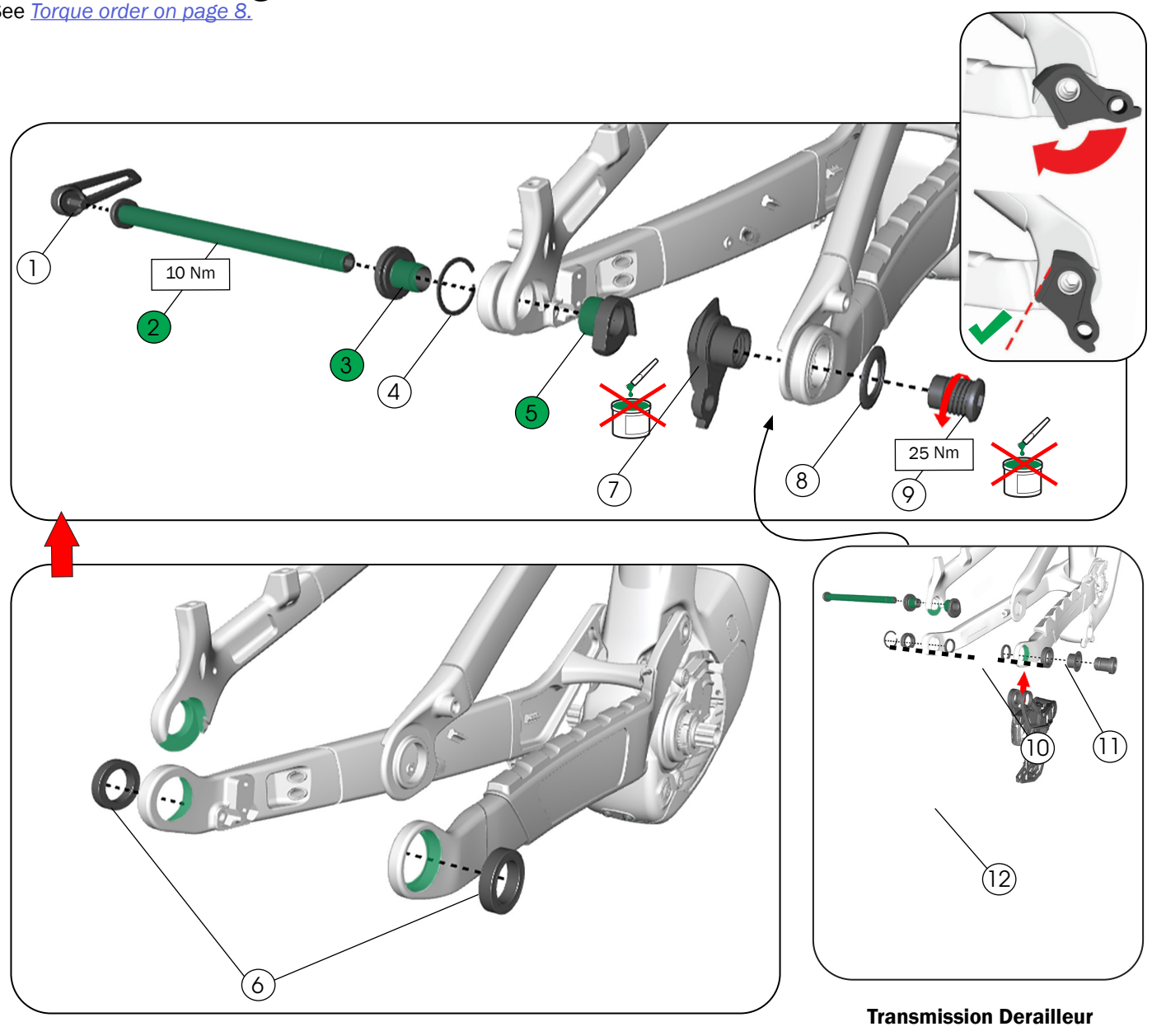

Transmission Derailleur

1. Switch lever — W573860
2. Thru axle, M12 x 184.5 mm — W583469
3. Non-driveside ABP bolt — W5251141
4. Retaining ring — W5251279
5. Non-driveside ABP dropout nut — W5269707
6. Bearings, 20 x 30 x 7 mm — W5256340

— W5272776

7. Derailleur hanger
   NOTICE: Do not apply grease.
8. Washer, 30 mm
   Important: Use the washer supplied with the hanger.
9. Bolt
   NOTICE: Do not apply grease. Do not overtighten. Overtightening may damage the hanger.

— W5271425

10. Bushing
11. Mounting bolt
12. SRAM Transmission Derailleur

Refer to installation manual on *sram.com*.

Main pivot and chainstay

See *Torque order on page 8.*

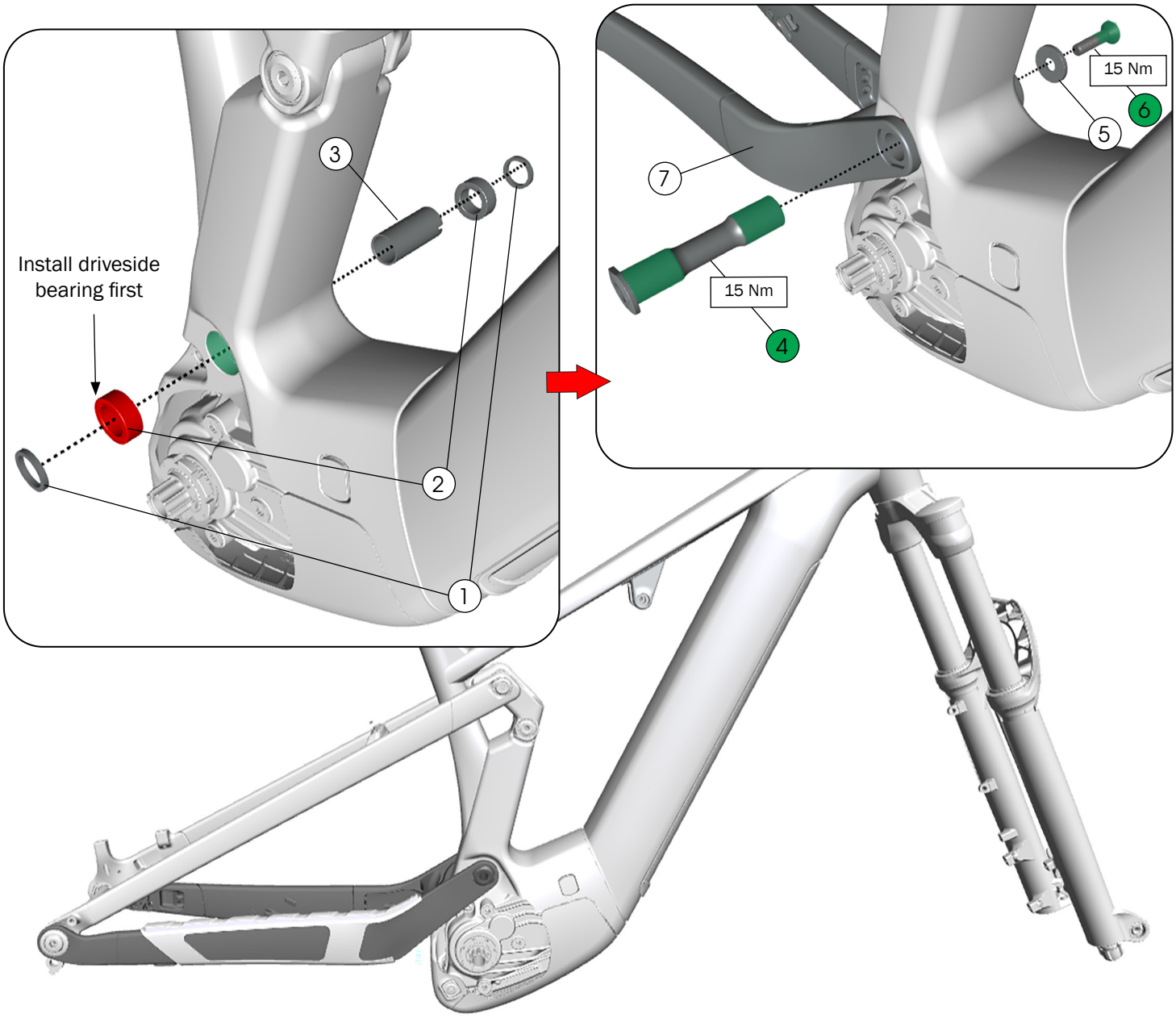

1. Spacers, 22 x 17 x 3 mm — W440921
2. Bearings, 17 x 26 x 10 mm — W5329843
3. Sleeve, 44 mm wide — W600642
4. Thru axle, 17 x 80.5 mm — W5270022
5. Pivot bolt cap — W5270022
6. Fastener, M8 x 35 mm W5270024 — W5270149
7. Chainstay — 49936*
   *Paint matched part. See *trekbikes.com* to find the color-matched part for your bike.

Flapper link

See *Torque order on page 8.*

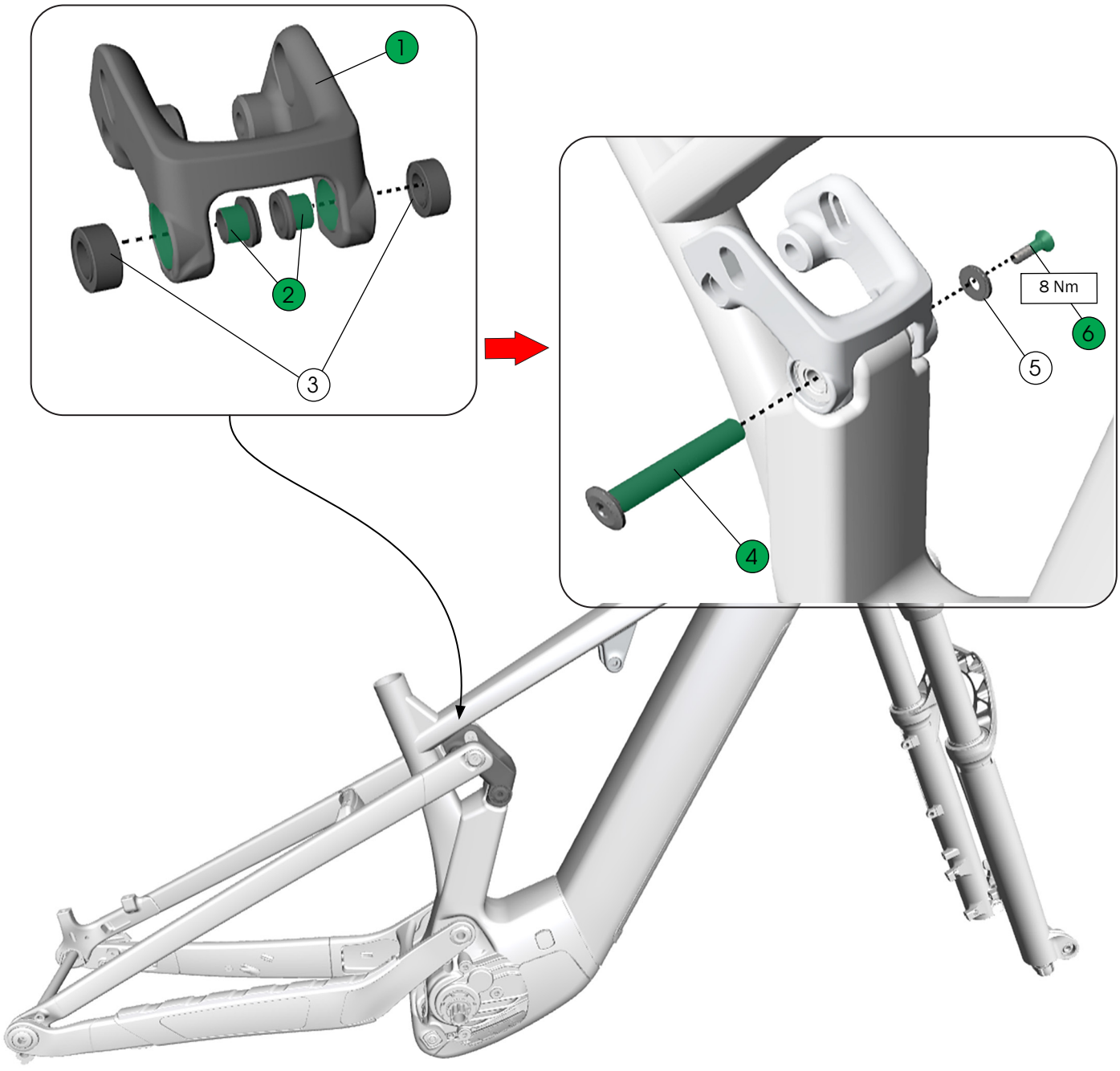

1. Flapper link, Matte Dark Web only — 49936
2. Hat style washers — W5270030
3. Bearings, 12 x 21 x 8 mm — W5256341
4. Axle, M6 x 59 mm — W5319820
5. Pivot bolt cap — W5289553
6. Fastener, M6 x 25 mm — W5270150

Seatstay

See *Torque order on page 8.*

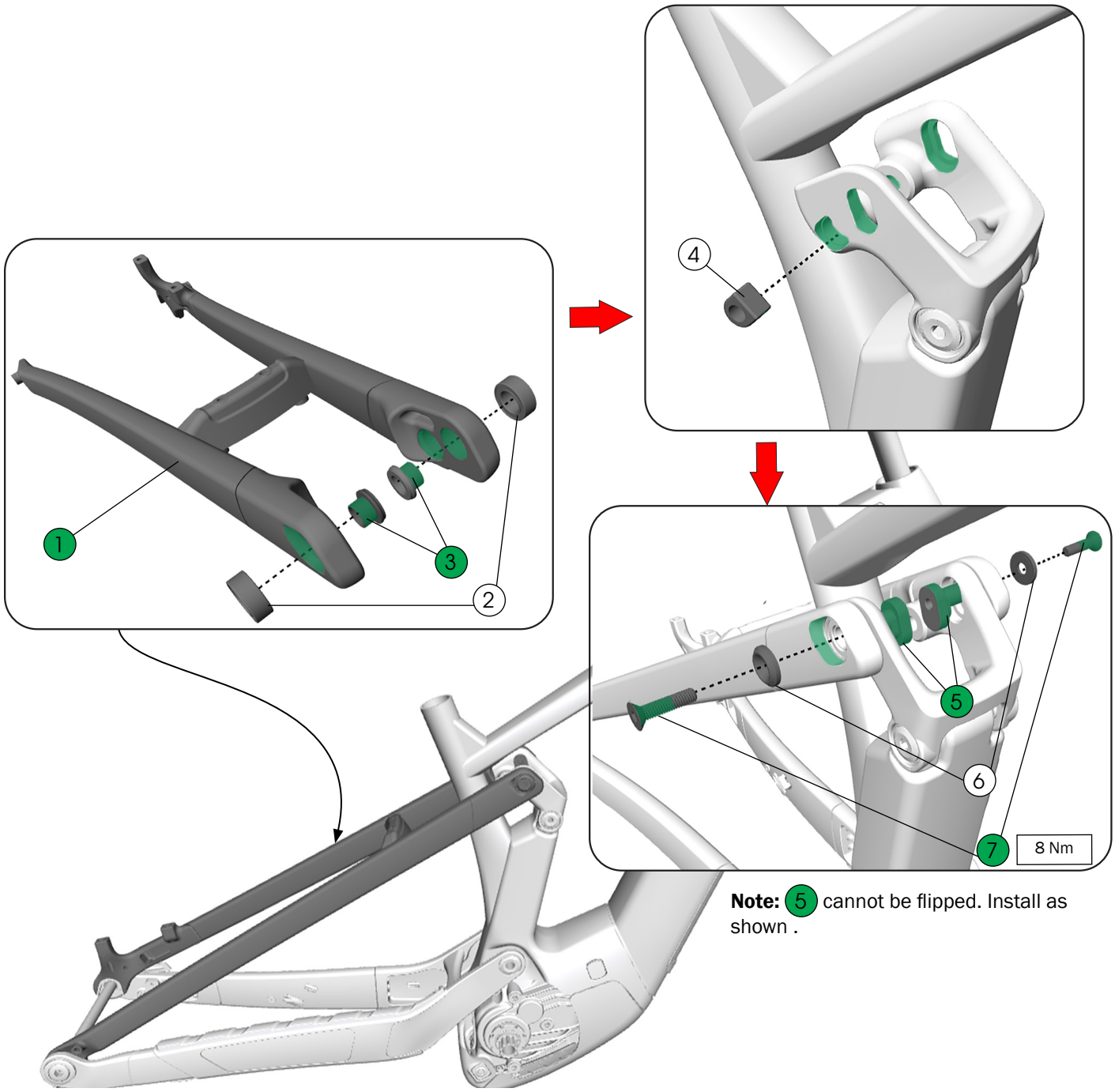

Note: 5 cannot be flipped. Install as shown .

1. Seatstay
   Small frame, Matte Dark Web only — 5332916
   M – XL frames — 49938*
   *Paint matched part. See *trekbikes.com* to find the color-matched part for your bike.
2. Bearings, 12 x 21 x 8 mm — W5256341
3. Hat-style washers — W5270030
4. D nut — W5304866
5. Mino nuts — W5270028
6. Pivot bolt caps — W5289533
7. Fasteners, M6 x 25 mm — W5270150

Shock mounts

See *Torque order on page 8.*

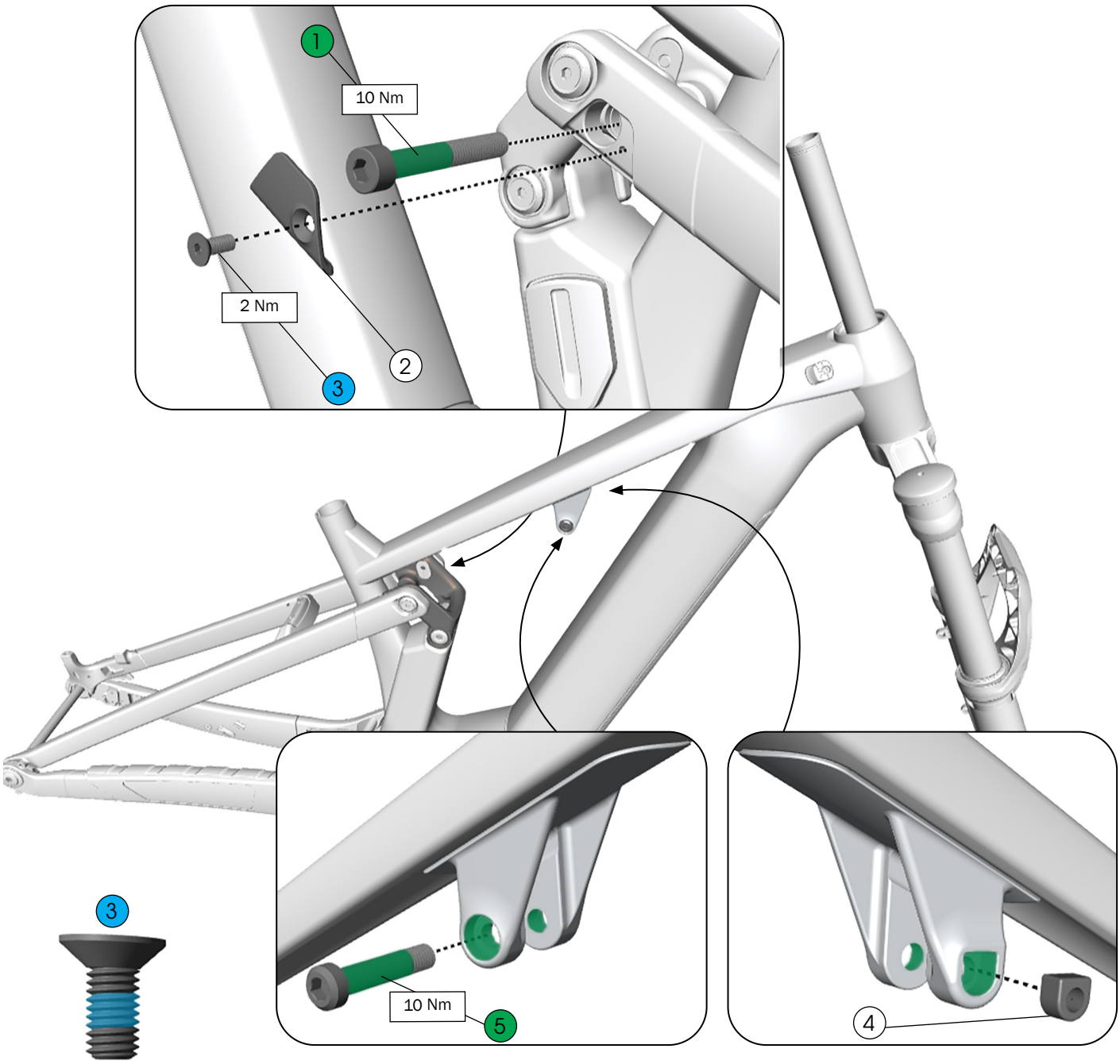

1. Fastener, M8 x 55 mm — W5283450
2. Fastener cover — W5322034
3. Fastener, M4 x 10 mm, flat head — source locally
4. D nut — W5304866
5. Axle, M8 x 40 mm — W573160



Shock Dimensions

Eye-to-Eye-length: 210 mm

Stroke length: 50 mm

Shock upper mount: 20 mm x 8 mm

Shock lower mount: 20 mm x 8 mm

For a list of compatible shocks, refer to the FAQ on the Powerfly+ Full Suspension product pages on *trekbikes.com*.

Torque order

Important: Remove the bike from the bike stand and set it on the ground before torquing all fasteners to spec.

1



2

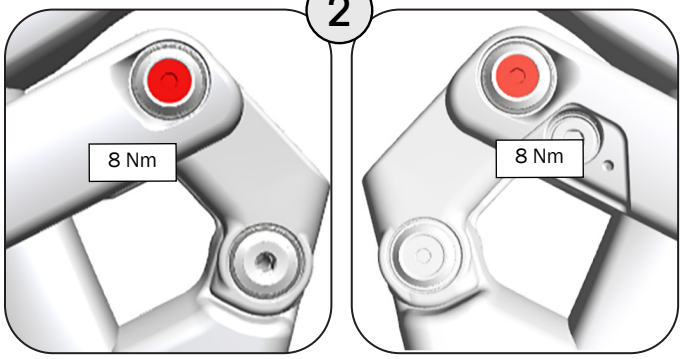

3

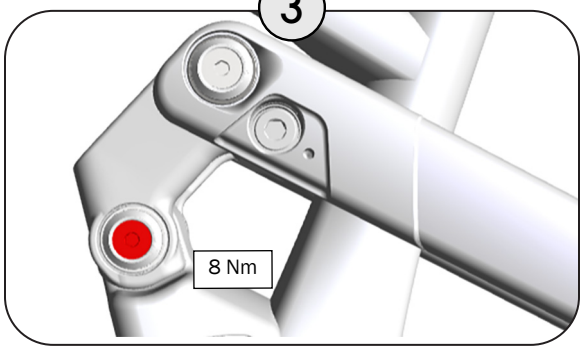

4

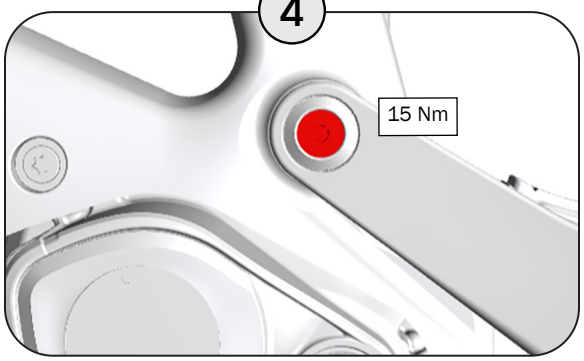

5

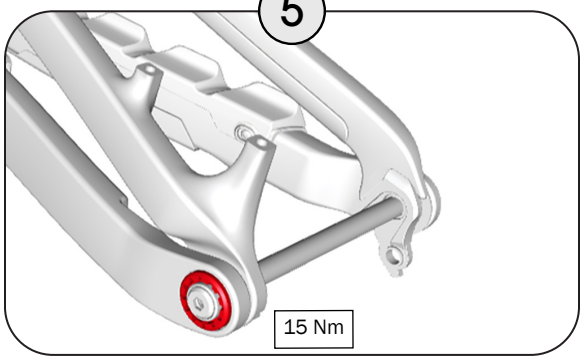

6

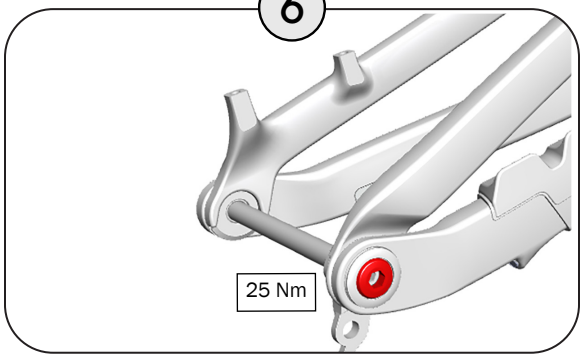

7

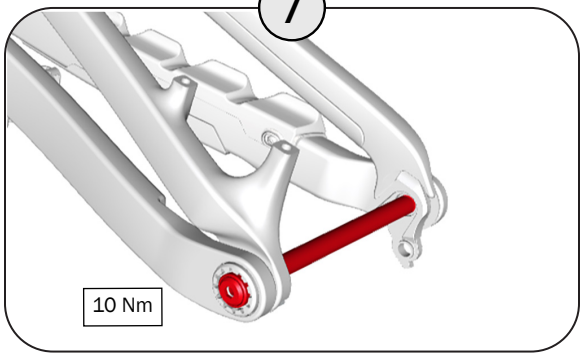

8

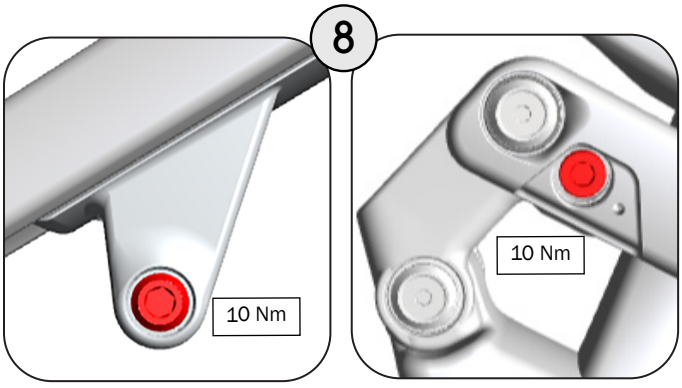

Brake and mechanical shift routing

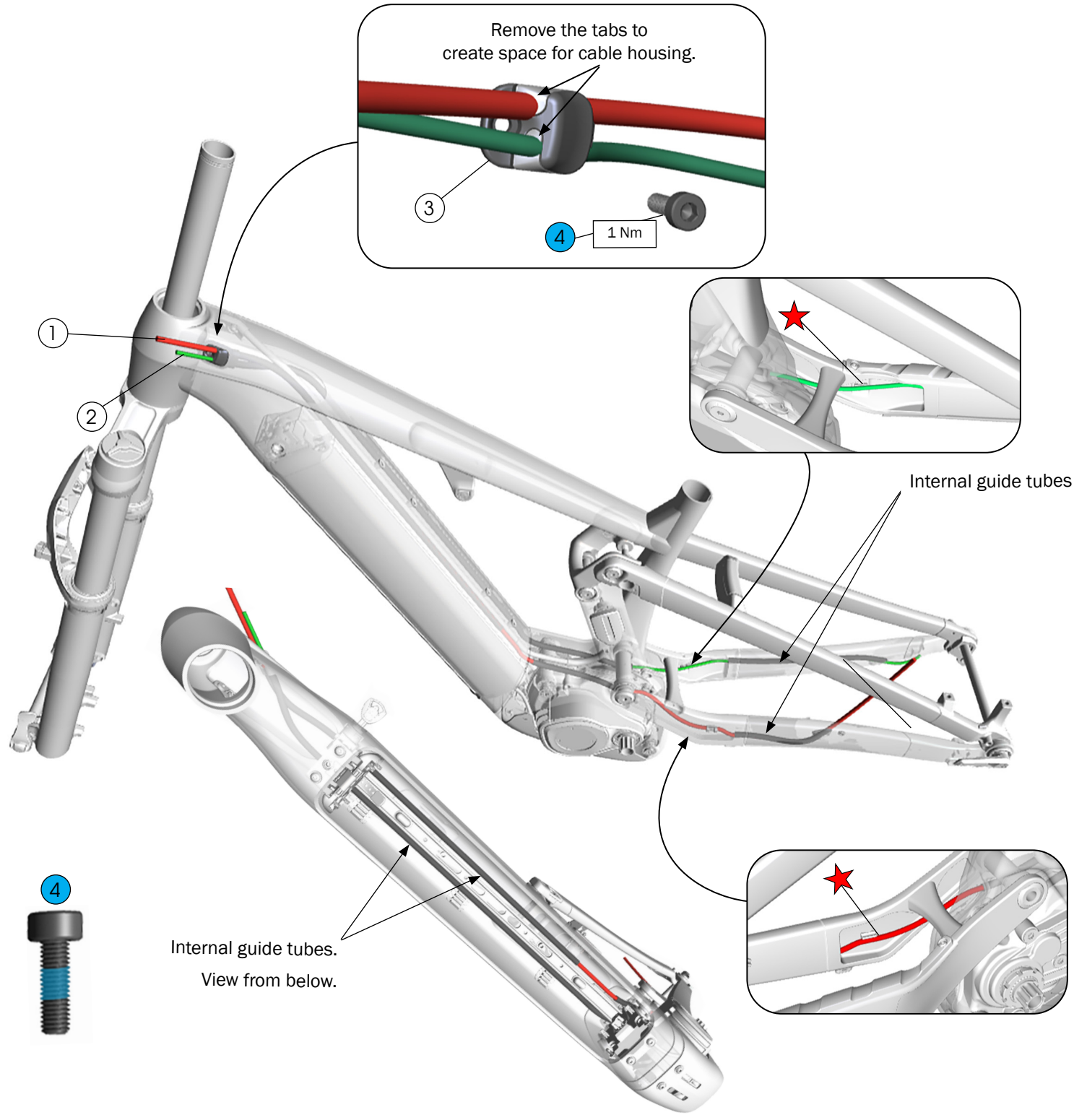

1. Rear brake hose
2. Rear derailleur cable housing
3. Cable entry guide
4. Fastener, M3 x 10 mm — W545633

Zip tie

W5317471

AXS wired shift routing

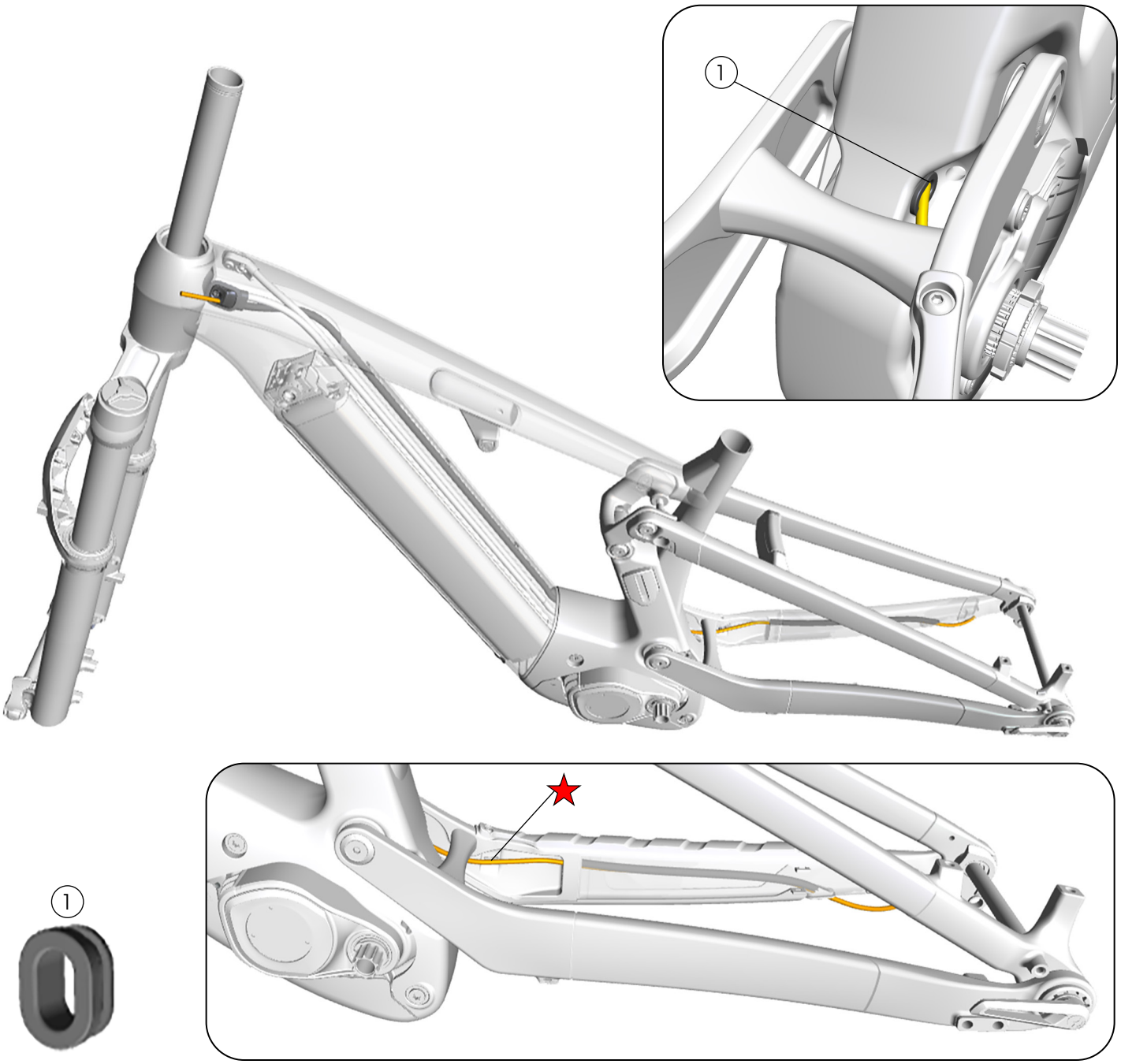

1 Cable grommet — W5255861

★ Zip tie

Seatpost dropper routing

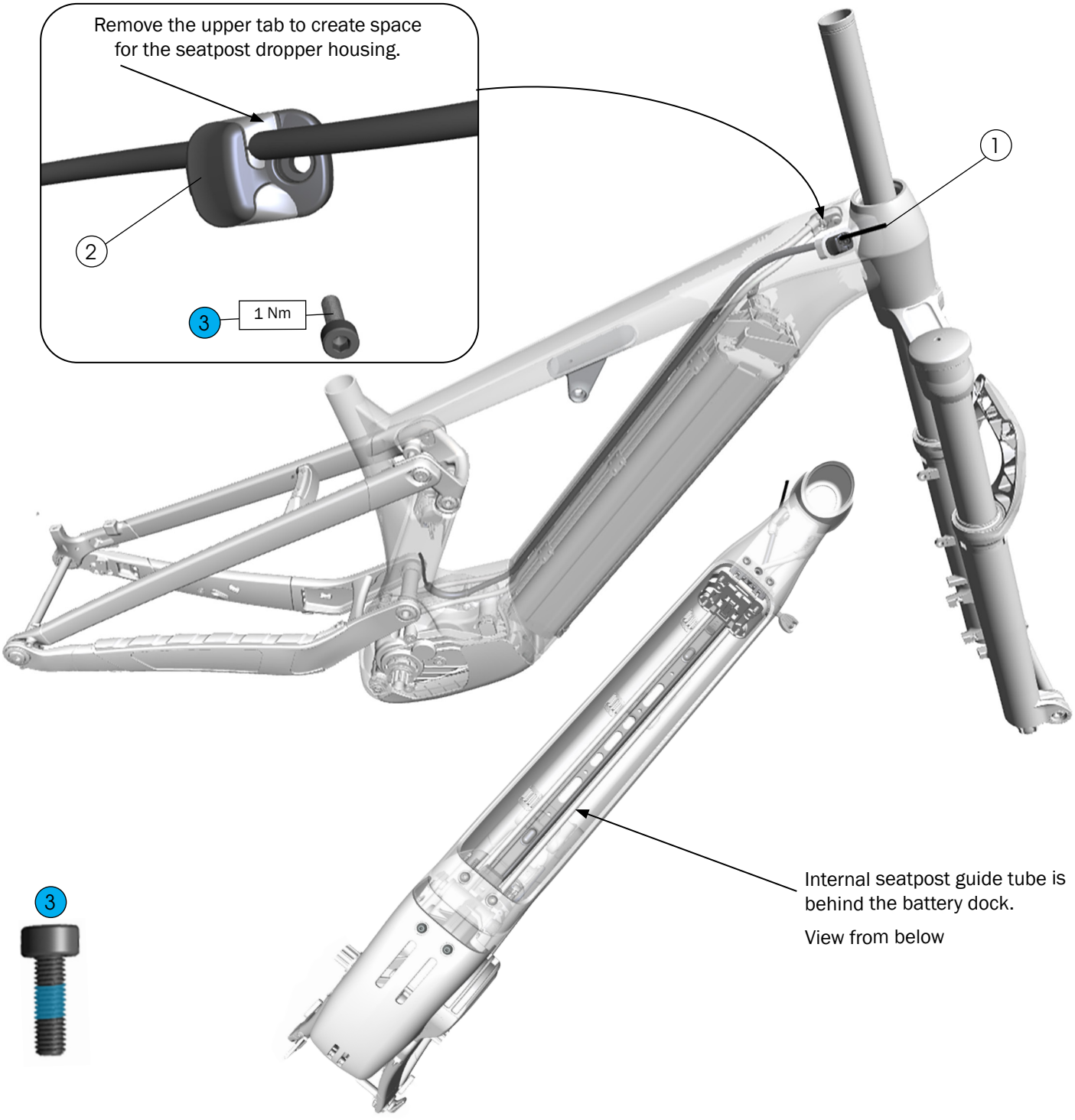

1. Seatpost dropper housing
2. Cable exit guide
3. Fastener, M3 x 10 mm

— 5317471

Speed sensor routing

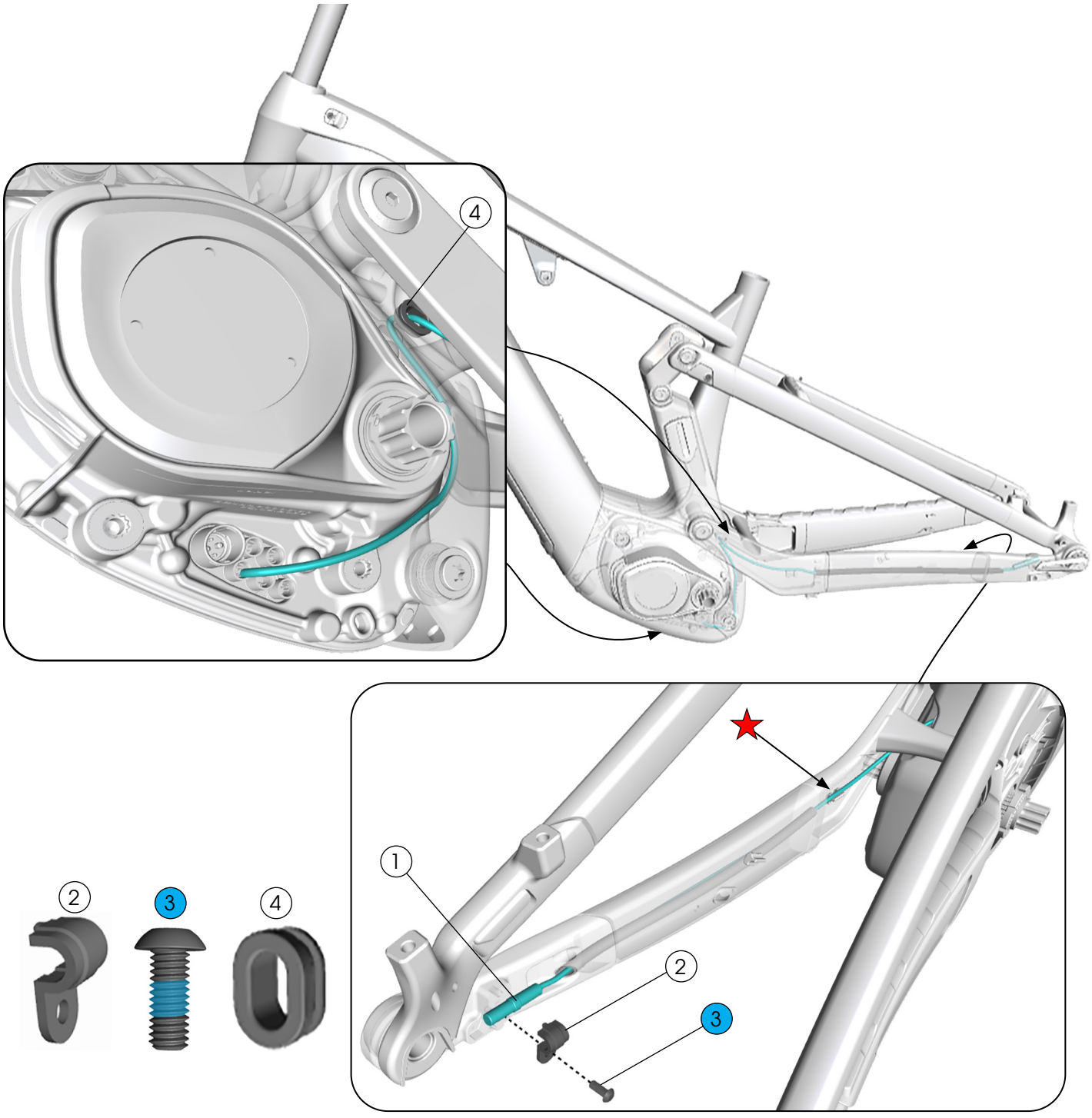

1. Speed sensor cable, 815 mm Bosch p/n — EB11.200.012
2. Speed sensor clip, Bosch p/n — EB1270.016.038
3. Fastener, M4 x 10 mm (6 pack) — 5317308
4. Cable grommet — W5255861
5. Magnet, 6-bolt rotor style (not pictured) — W5252927
- ★ Zip ties

Remote routing

See *Seatpost dropper routing on page 11* for cable guide information.

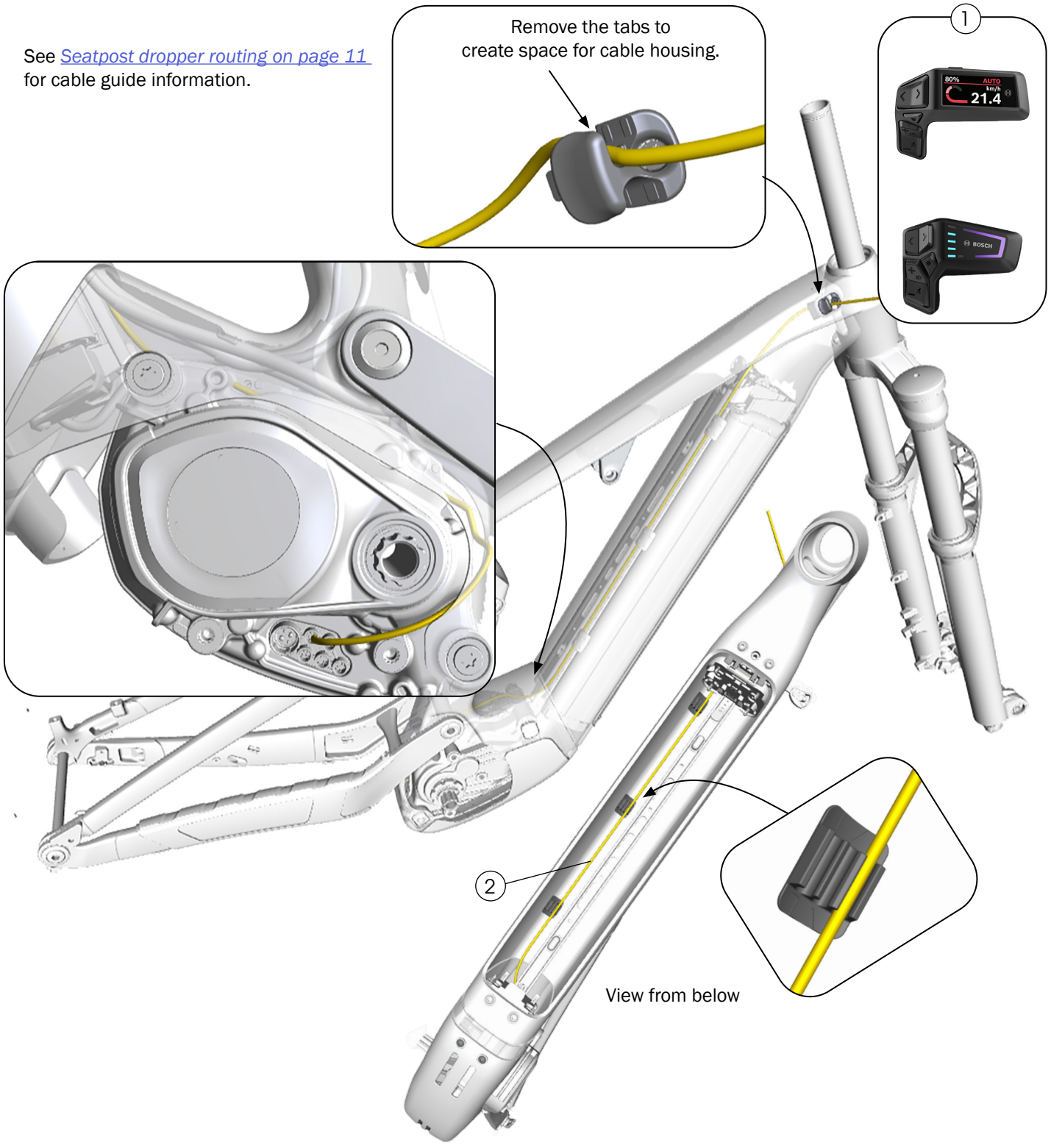

1. Remote, Bosch p/n
   Purion 200 — EB13.200.03V
   LED Remote — EB13.100.00E
2. HMI cable, Bosch p/n — EB12.120.005

Rear light routing

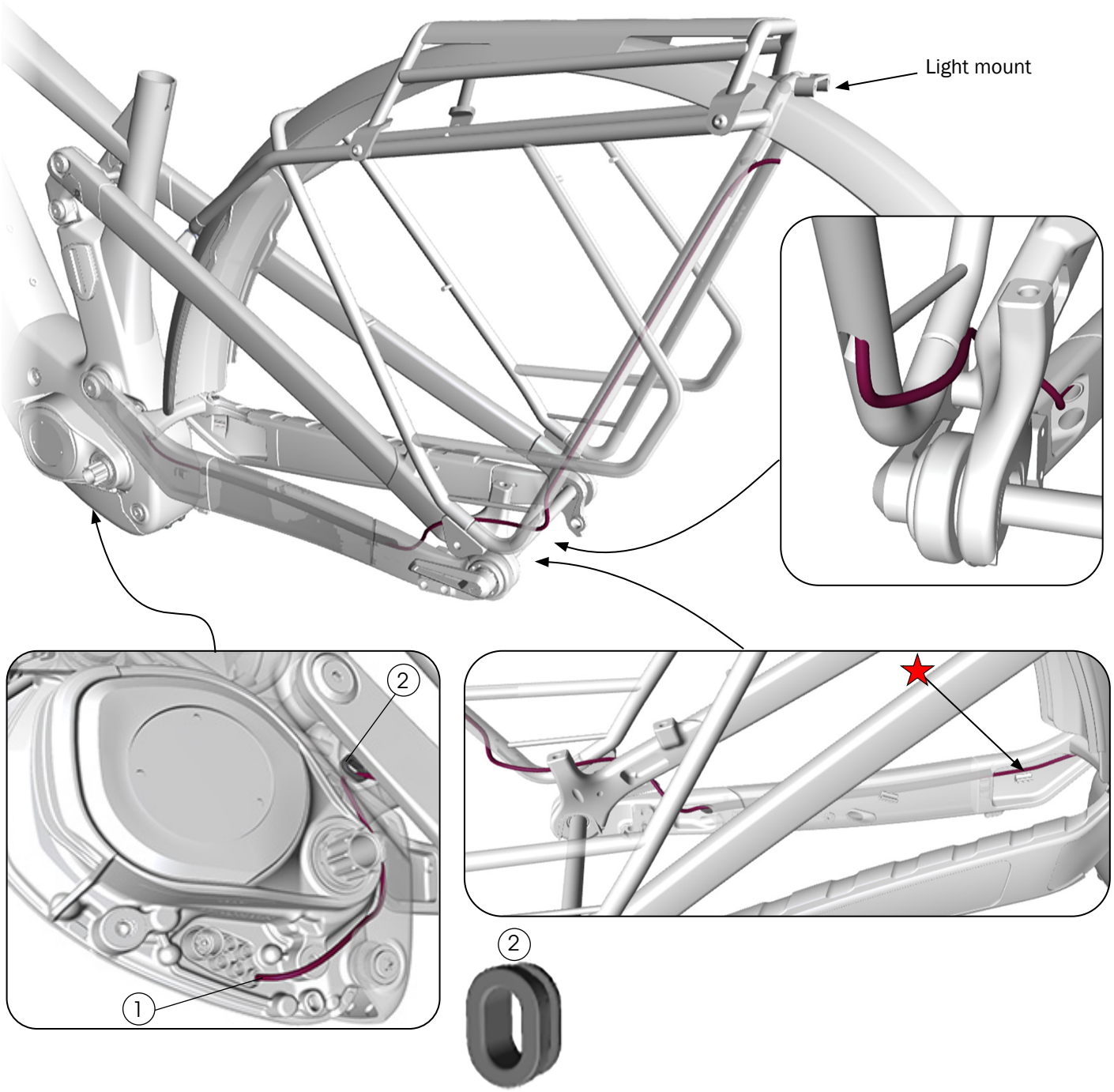

(1) Light (not pictured) and cable — W5329844

(2) Cable grommet — W5255861

★ Zip tie

Front light routing

See *Brake and mechanical shift routing on page 9* for cable guide information.

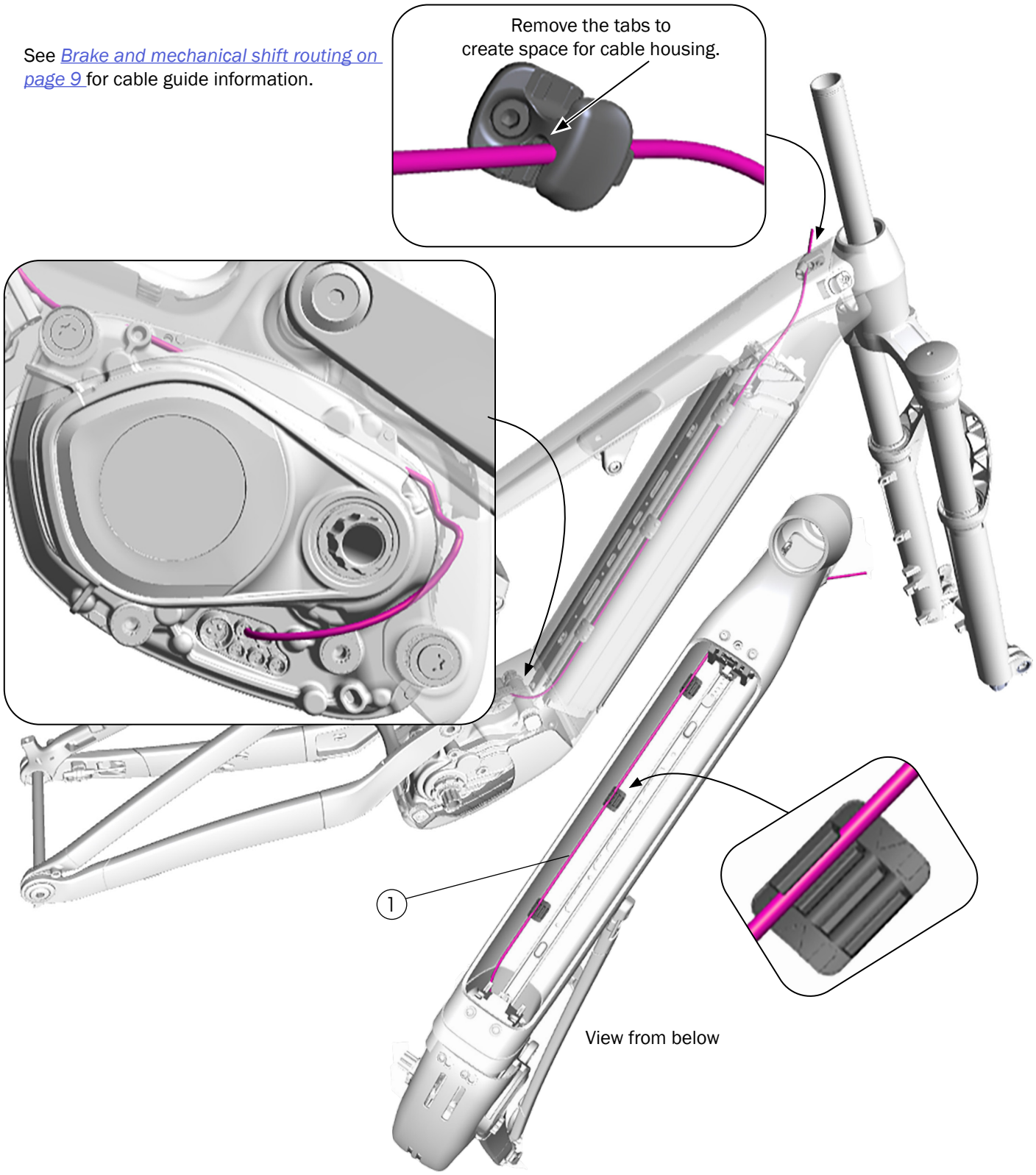

1. Light cable — W5288000
2. Light, not shown — W5329843
3. Blendr mount for light, not shown — W540565

Charge port

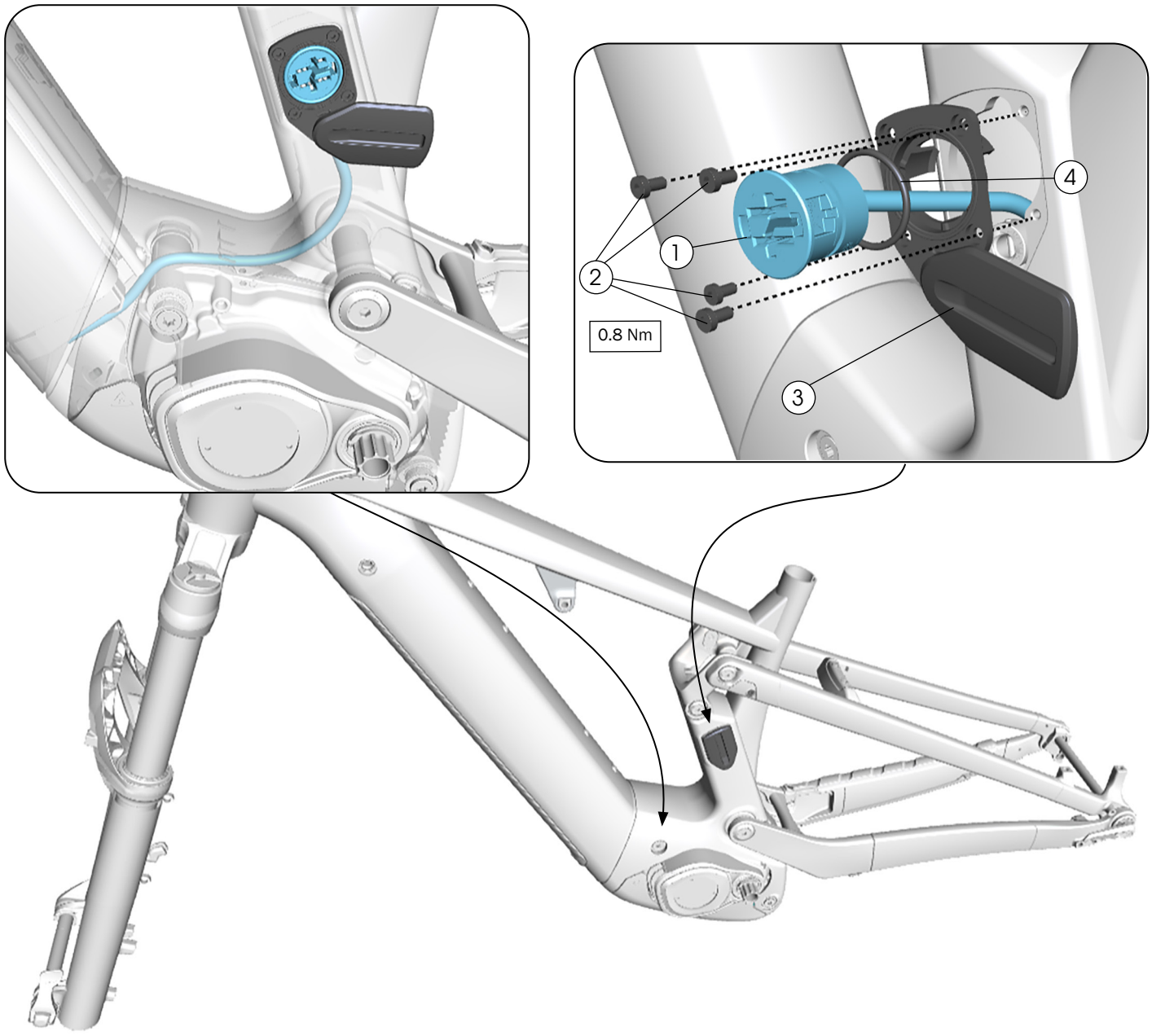

1. Charge port cable, 350 mm, Bosch p/n — EB12.120.03W
2. Fasteners, M3 x 6 mm — W5276241
3. Charge port door — W5307772
4. O-ring, Bosch p/n — EB12.120.019

Motor connection, bolts and cover

Refer to the Bosch Dealer Manual, found on the dealer portal, for motor installation instructions and torque specs.

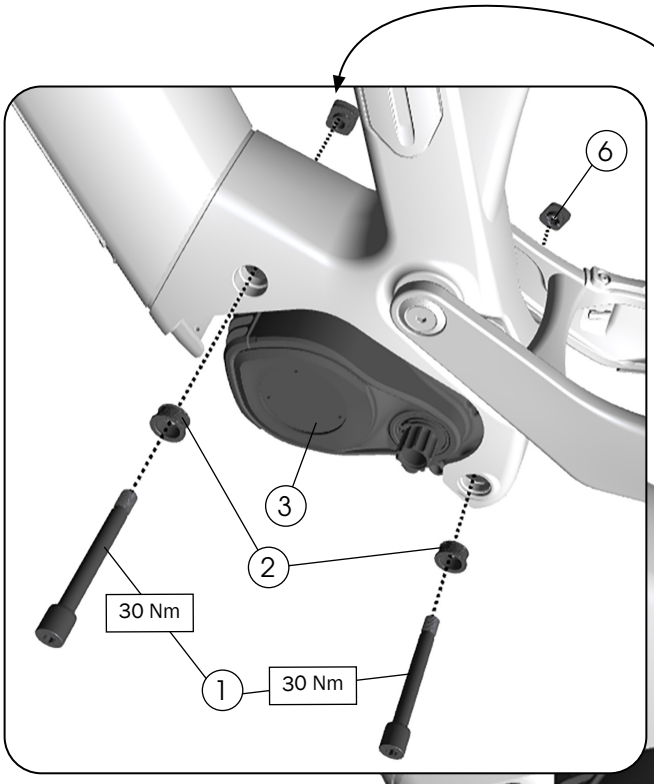

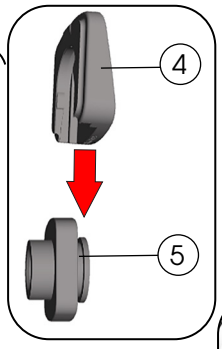

Slide (4) onto (5) before installing into the frame.

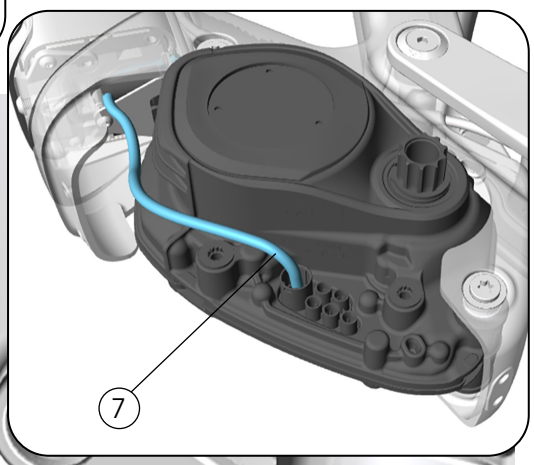

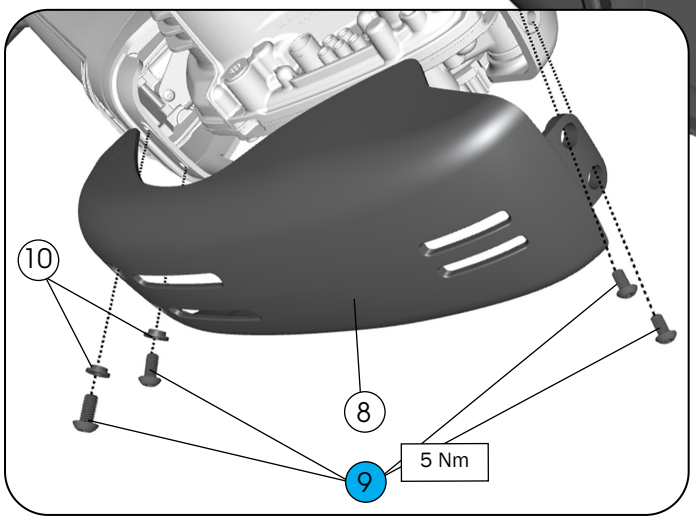

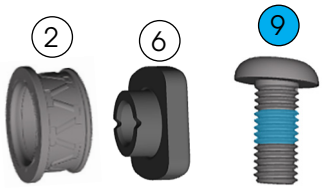

(1) Short motor bolts, M8 x 68.7 mm, Bosch p/n — EB11.200.0N9

(2) Motor sleeves, Bosch p/n — EB11.200.0GK

(3) CX motor, Bosch p/n — EB11.100.00E

(4) Nut cover

(5) Nut, M8 x 1 mm

— W5317916

(6) Nut, Bosch p/n — EB11.200.03C

(7) Battery cable, 500 mm, Bosh p/n — EB12.120.02V

(8) Motor cover — W5322032

(9) Fasteners, M5 x 10 mm — W549305

(10) Top hat style washers — W5272256

Frame guards and mini fender

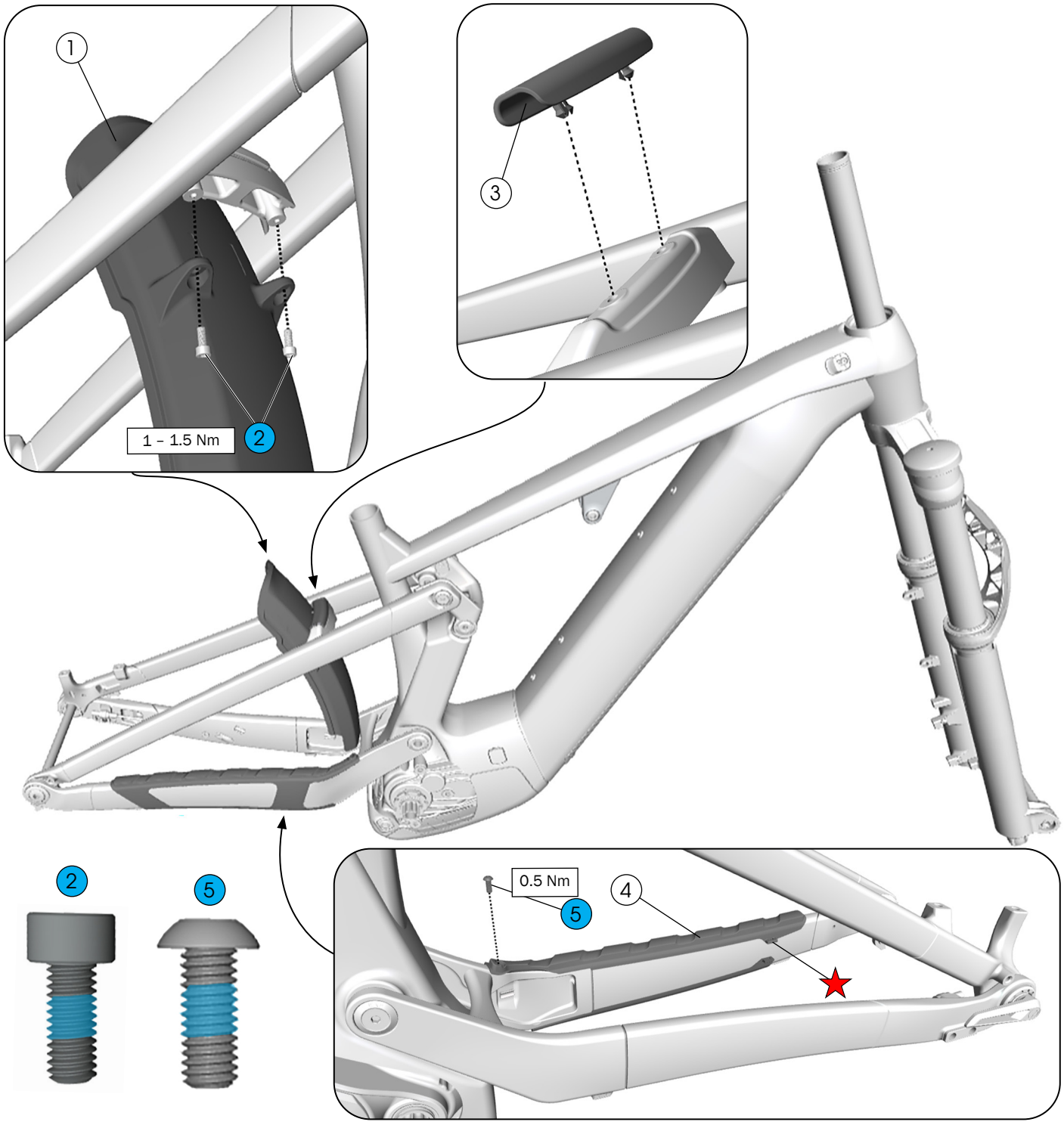

1. Fender
2. Fasteners, M4 x 10 mm

— W5318773

3. Seatstay bridge cover — W5322033
4. Chainstay guard — W5319004
5. Fastener, M4 x 10 mm (6 pack) — 5317308
- ★ Zip tie

Rear fender and rack

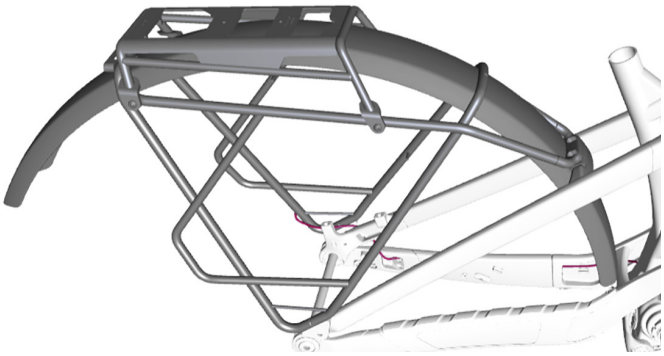

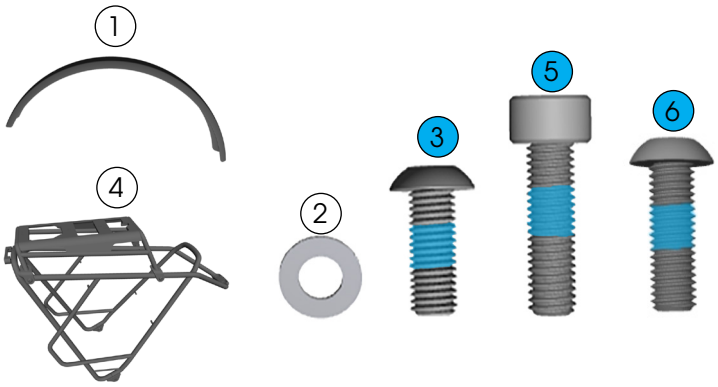

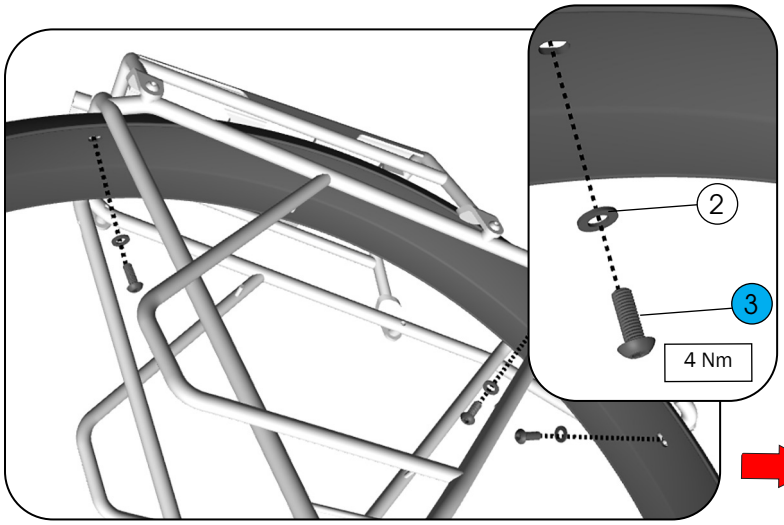

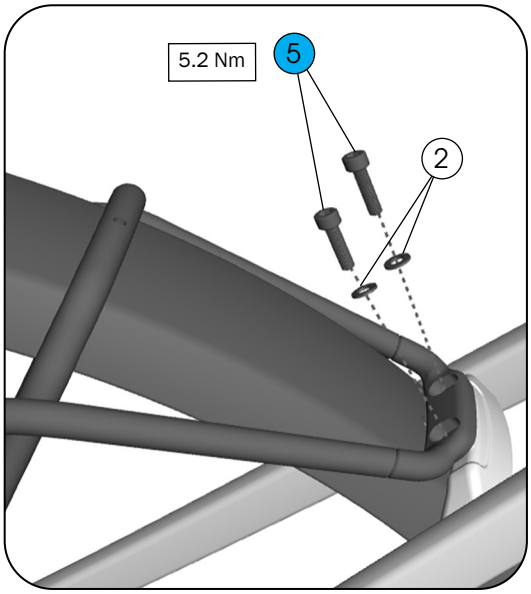

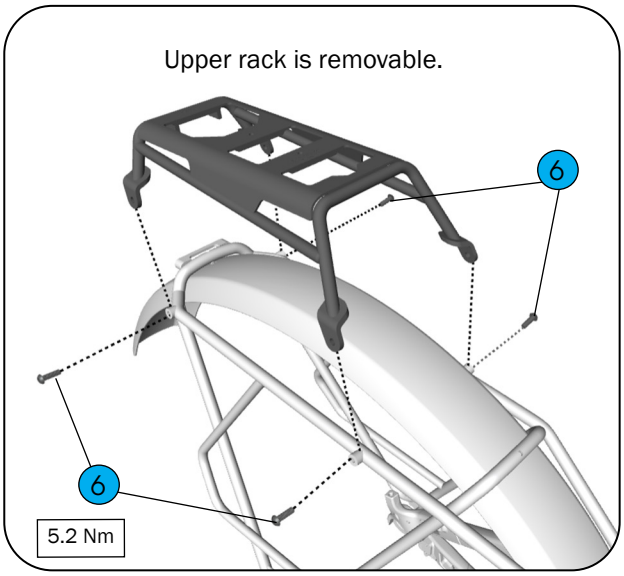

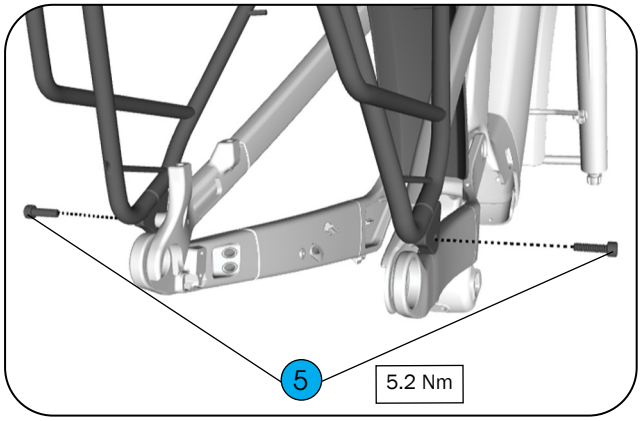

1. Fender
2. Washers, 10 x 5.3 x 1 mm
3. Fasteners, M5 x 14 mm

29” — 5332869
27.5” — 5332868

4. Rack
5. Fasteners, M5 x 18 mm
2. Washers, 10 x 5.3 x 1 mm
6. Fasteners, M5 x 16 mm

29" — 5330444
27.5" — 5330443

Front fender

NOTE: This fender is not compatible with all Fox forks — verify the fork has the proper mounting holes shown below.

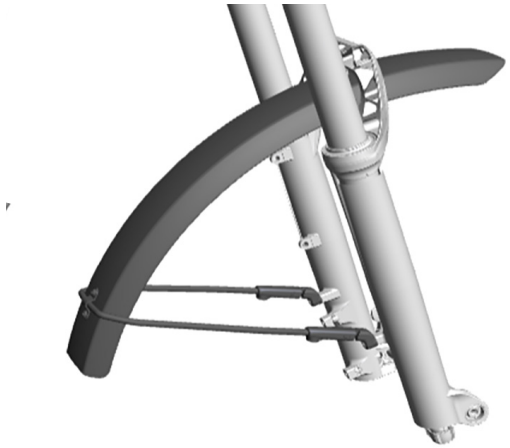

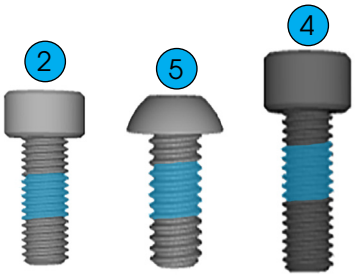

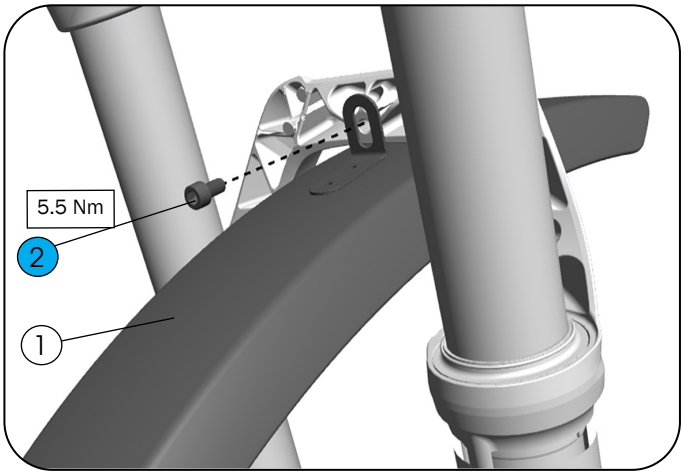

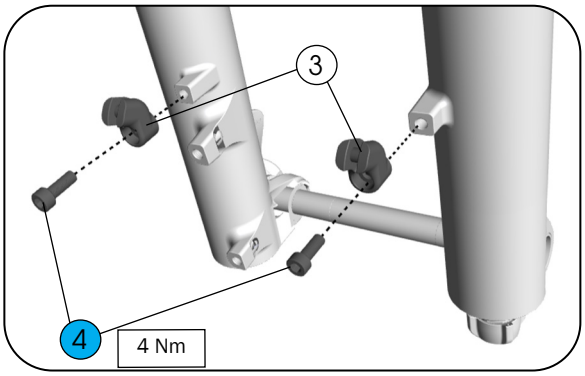

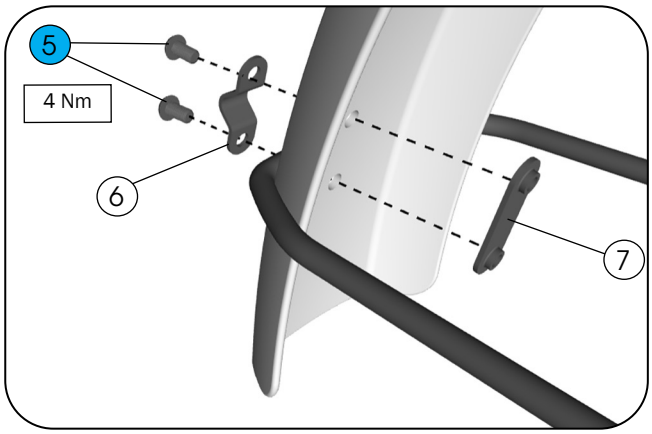

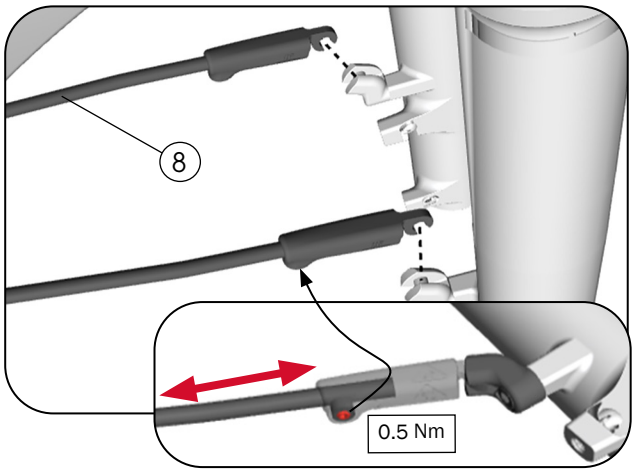

Adjust the fender stay

1. Loosen the set screw.
2. Adjust the fender stay.
3. Tighten the set screw.

1	Fender	5	Fasteners, M5 x 10 mm
2	Fastener, M6 x 10 mm	6	Fender stay outer mount
3	Fork mounts	7	Fender stay inner mount
4	Fasteners, M5 x 14 mm	8	Fender stay

29” — 5332869
27.5” — 5332868

Specifications

Chainline/Chainring

Chainline	Chainring	
	Minimum	Maximum
55 mm only	34T	38T

Rear brake mount

180 mm direct post mount, adaptable to 220 mm

Rear O.L.D

148 mm

Maximum tire size

S: 27.5” x 2.5”

M-XL: 29” x 2.5”

Notice: Measurements of actual tires may vary. Always verify there is sufficient clearance between the tire and the frame. Improper tire size could damage the bicycle frame. Trek recommends 6 mm clearance above and on both sides of the tire.

Fork

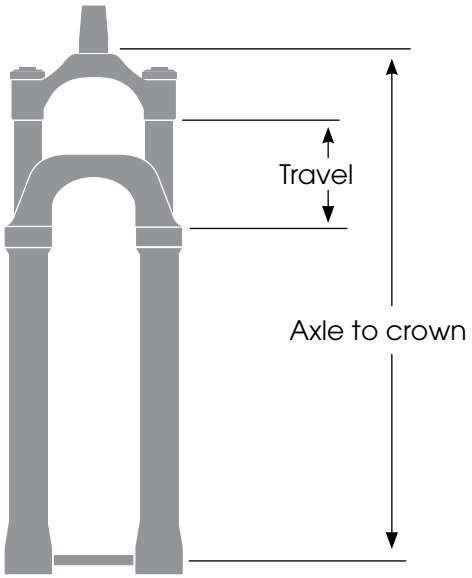

Frame size	Fork		Design (mm)	Max (mm)
S	Axle to crown		530	540
	Travel	Standard fork	130	140
		Fender-compatible fork	120	130
M-XL	Axle to crown		551	561
	Travel	Standard fork	140	150
		Fender-compatible fork	130	140

Recommended sag: Refer to the suspension calculator at *Trekbikes.com/suspension-calculator.*

Seatpost

WARNING

Always follow the seatpost manufacturer’s minimum insertion recommendation. Failure to follow the recommendation could cause damage to the seatpost and result in injury to the rider.

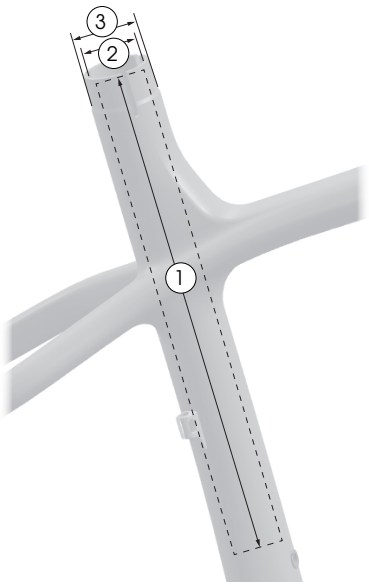

Minimum insertion: Refer to seatpost manufacturer.

1. **Maximum insertion**

   Small: 256 mm

   Medium: 267 mm

   Large: 288 mm

   Extra large: 324 mm

2. **Seatpost outer diameter:** 31.6 mm

3. **Seat tube post-clamp inner diameter:** 36.4 mm