MOUNTAIN & E-BIKES

QUICK ASSEMBLY GUIDE



TREK

WARNING: Failure to follow the assembly instructions outlined in this guide could lead to an accident, which could cause serious injury or death.

IMPORTANT: This assembly guide is not a replacement for the Trek Owner's Manual or other instructions required for your bicycle. The Trek Owner's Manual contains essential safety information that you must read and understand before riding your new bike. The manual is included in the box and can also be found at trekbikes.com/manuals.

WARNING: You add to the risk of injury if you use your bicycle in an incorrect manner. Misuse can add stress to the bike and cause the frame or components to break. To decrease your risk of injury, use the bicycle in the manner for which it was designed (see the "Use conditions & weight limits" section in the Trek Owner's Manual).

To see the guide and watch the assembly video, use this QR code:
trekbikes.com/how-to-assemble-bike >
Mountain bikes

If you are unsure about the final assembly, take your bike to a Trek retailer for an assembly inspection before riding.

WARNING: Use only hardware supplied by Trek to complete the assembly of the bicycle.

1 Remove the tools from the tool box.

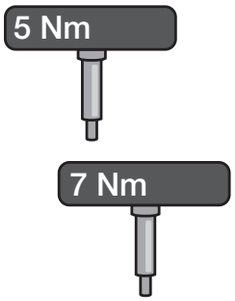

Torque wrenches



Pedal grease

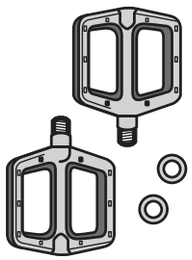

Pedals and washers (if included)

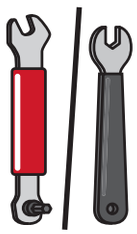

Pedal wrench

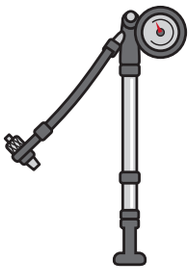

Shock pump

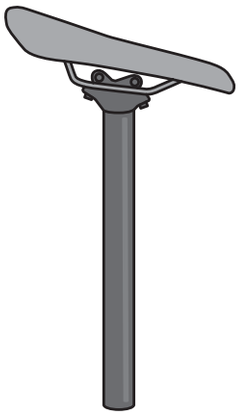

Seat and seatpost



Ebike quick start guide (for ebikes)



Manuals

You can also find the manuals online at trekbikes.com/manuals.

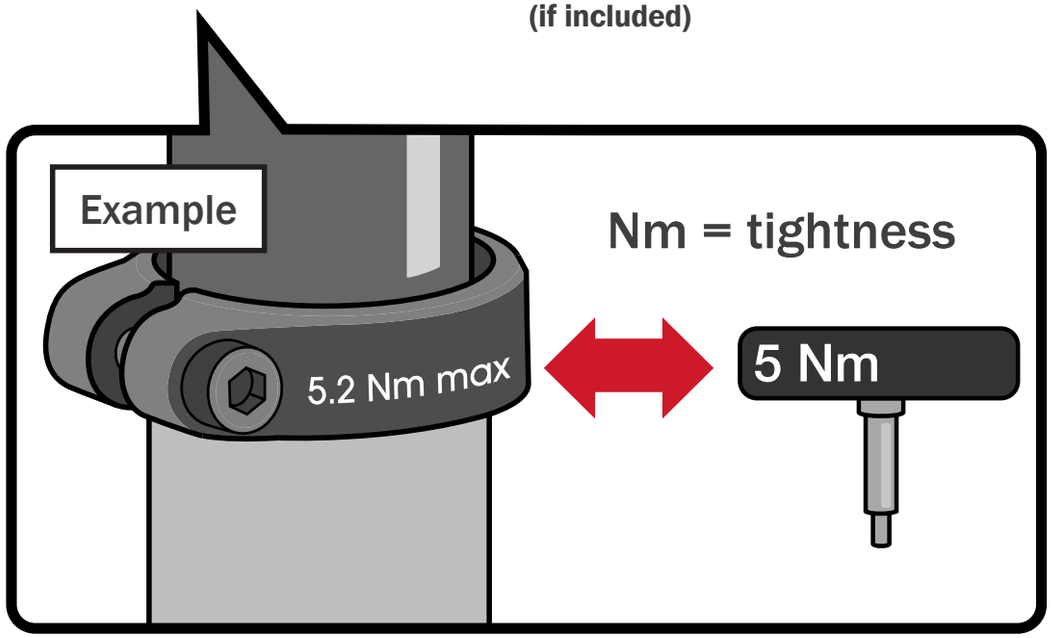

Match the number on the torque wrench to the etching on the component.

Parts and tools will vary based on bike model. Not all tools are provided (such as a tire pump).

2 Take the bike out of the box and remove the cardboard around the fork.

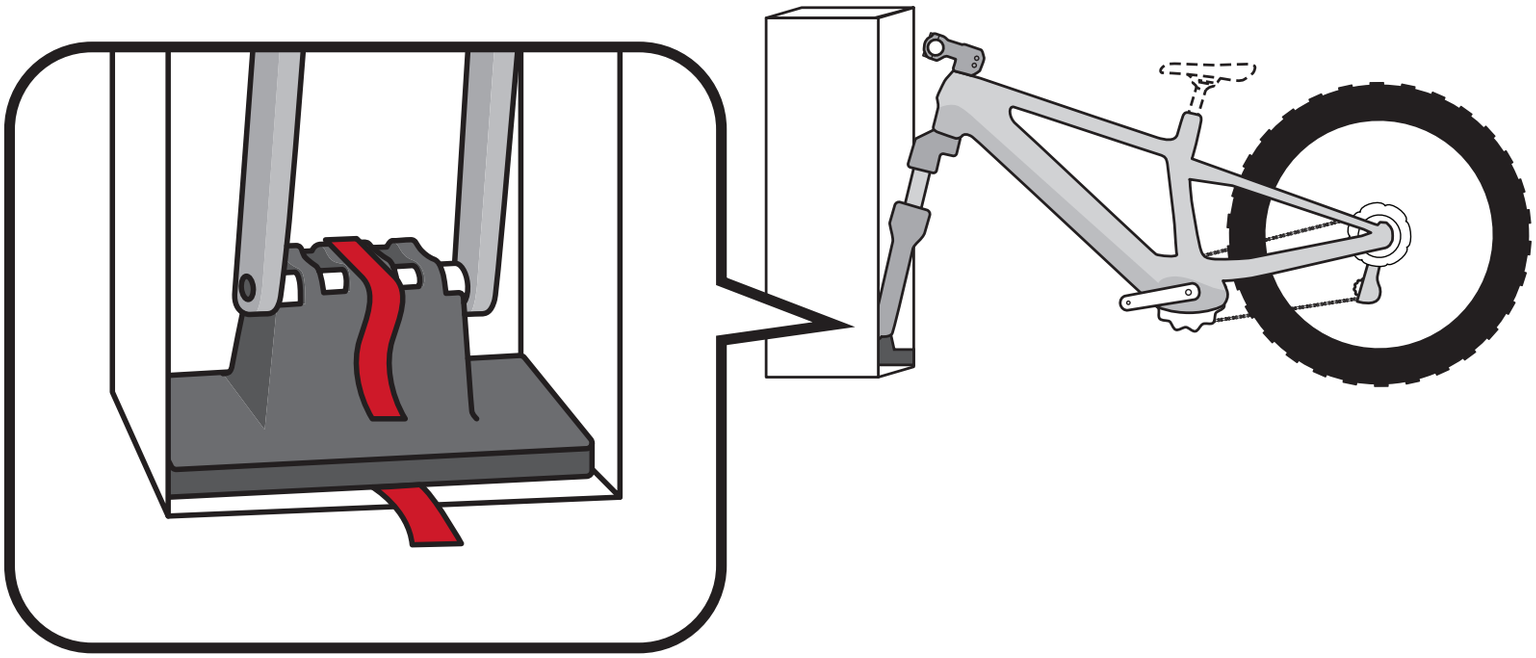

For e-bikes, make sure your e-system is off before assembly.

3

Check the bike for shipping damage and make sure all parts are included. Pay special attention to the fork legs and the seat stays (both inside and outside surfaces).

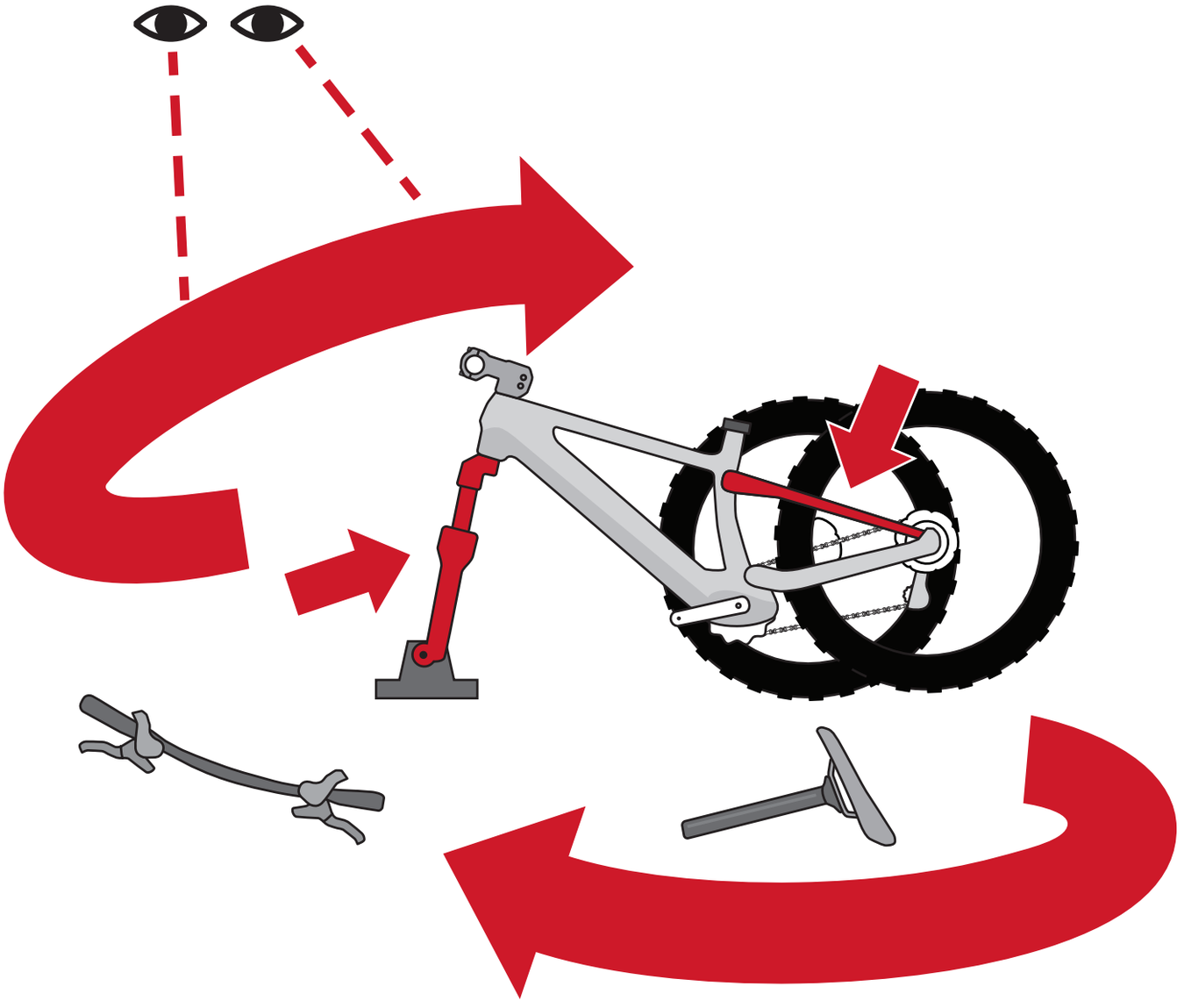

If you notice damage or you're unsure about the initial inspection of your bike, contact Trek Customer Care at 1-800-585-8735.

4 Is there a dropper post that is not installed?

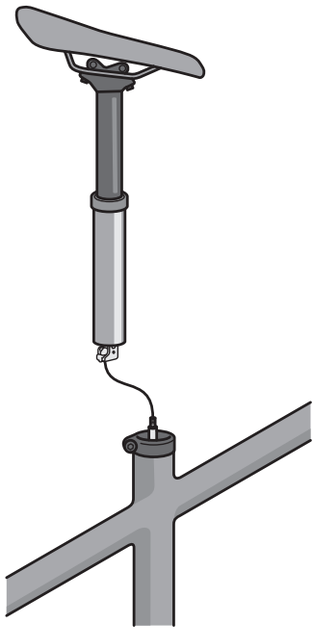

Yes

Go to step 5

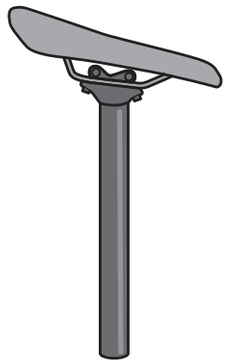

No

Skip to step 6

5 Use one hand to pull the cable housing out of the frame while inserting the dropper seatpost with the other hand (this prevents the cable housing from kinking). After the minimum insertion line is no longer visible, tighten the seatpost clamp bolt until you feel the tool click.

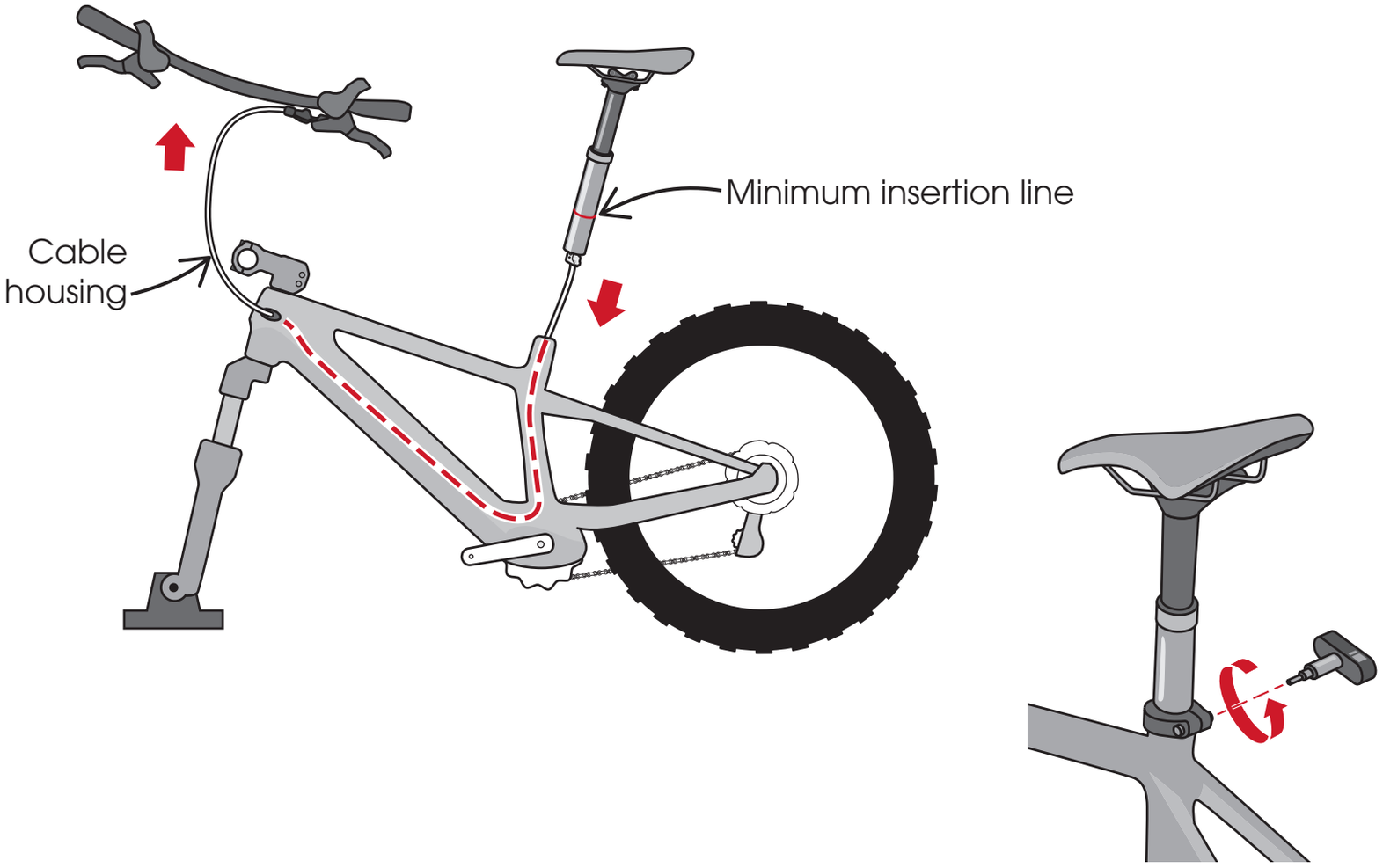

6 Is the stem installed?

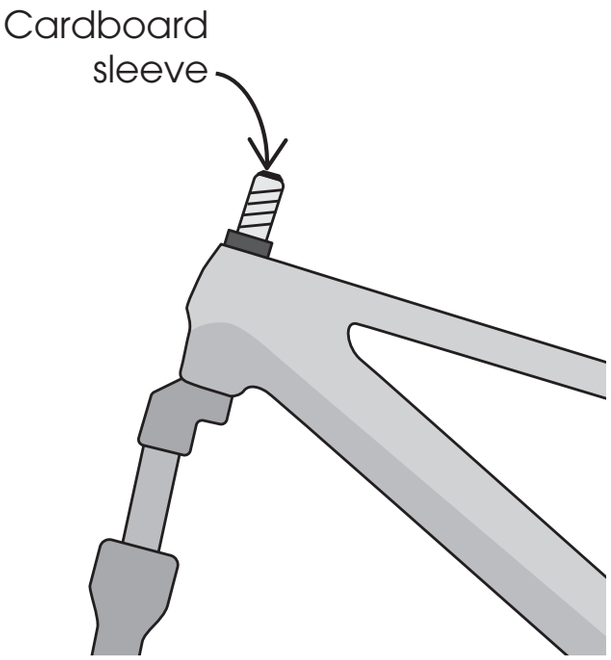

No

Go to setp 7

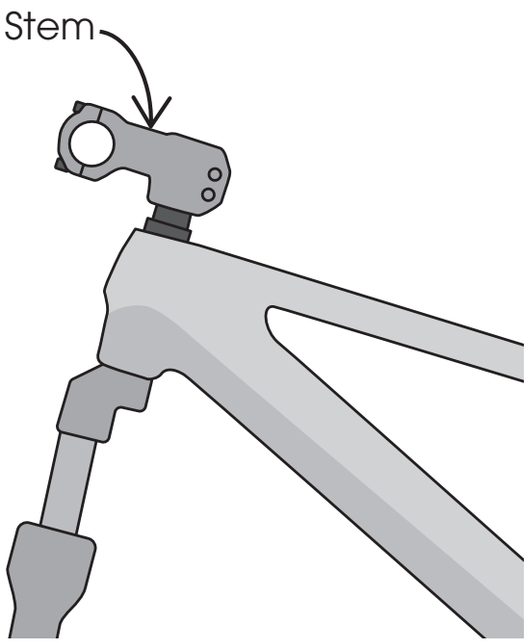

Yes

Skip to step 10

Handlebar/stem combos come uninstalled

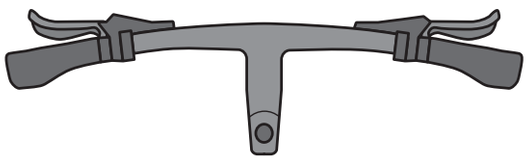

7

Remove the cardboard sleeve. Slide the handlebar/stem down the steerer tube. If there is a plastic shim taped inside of the handlebar/stem, remove the tape and install it in the same position.

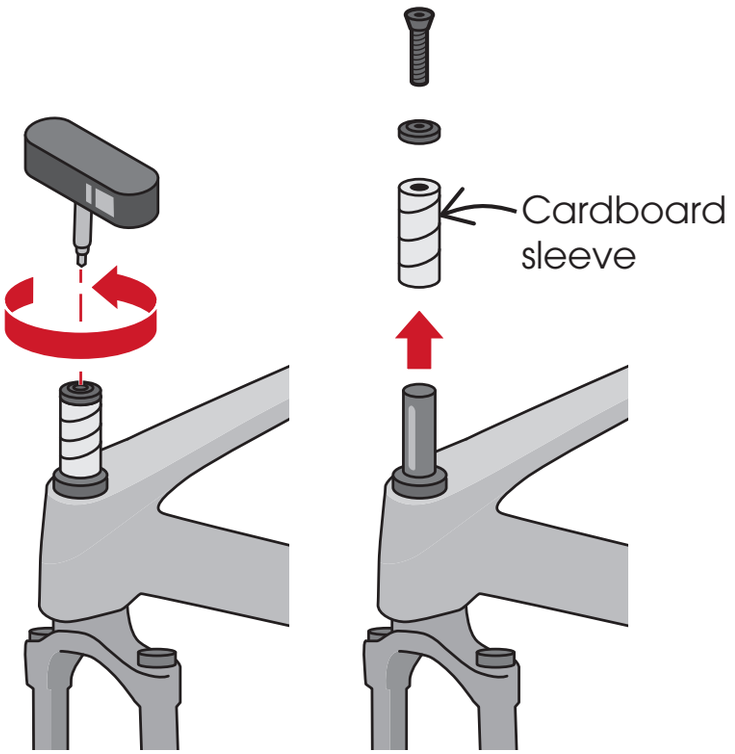

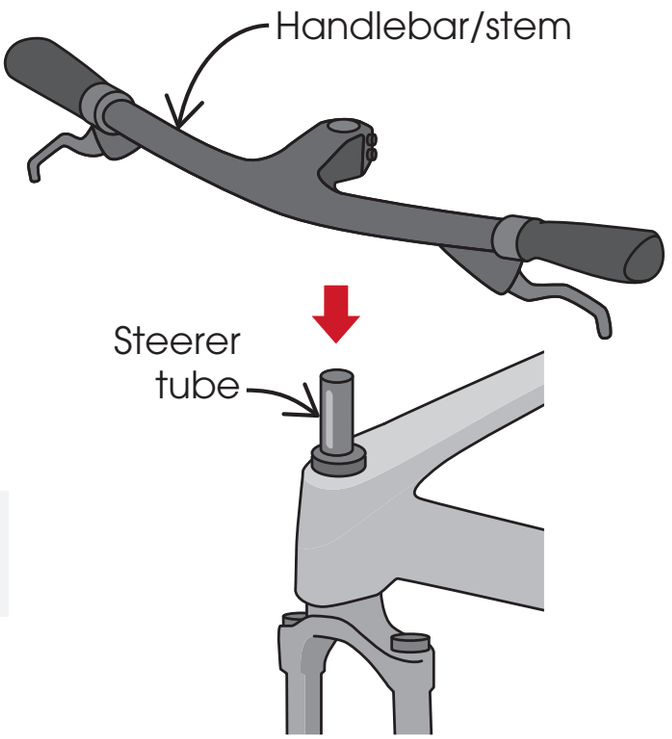

Do not pick up the bike after removing this bolt (grease can travel up the steerer tube).

8

Reinstall the top cap and bolt. Tighten the bolt until it's snug (you will verify and adjust the tightness later).

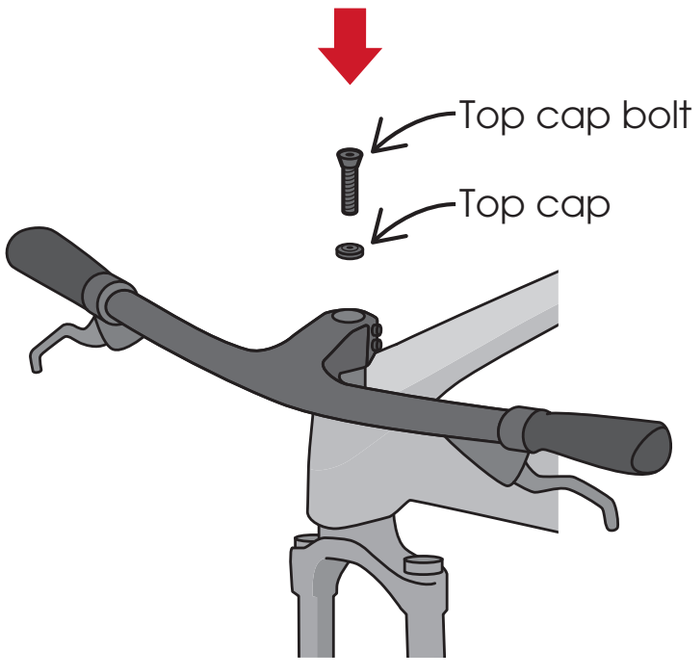

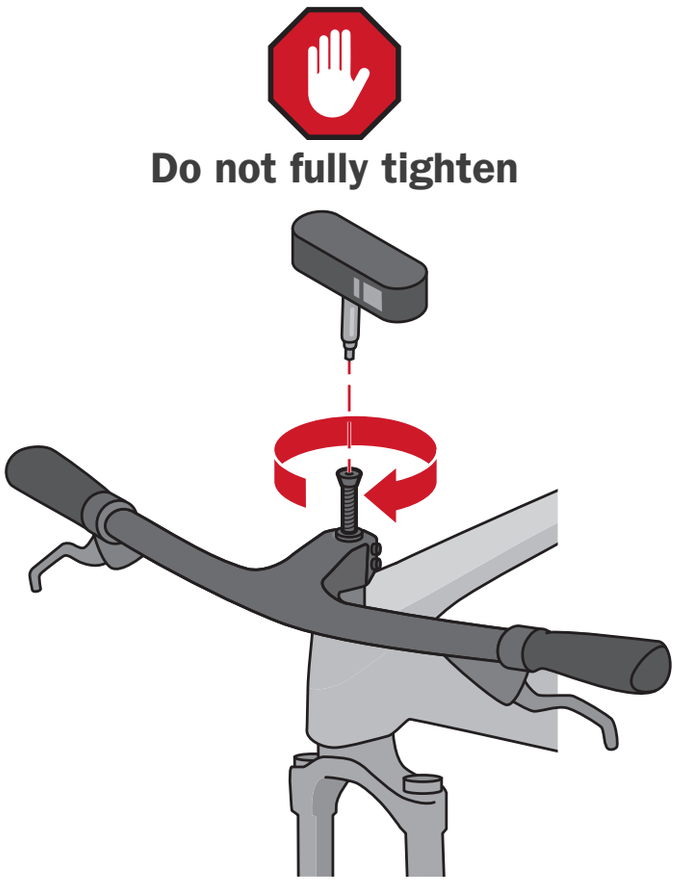

9 Align the handlebar and loosely tighten each stem bolt.

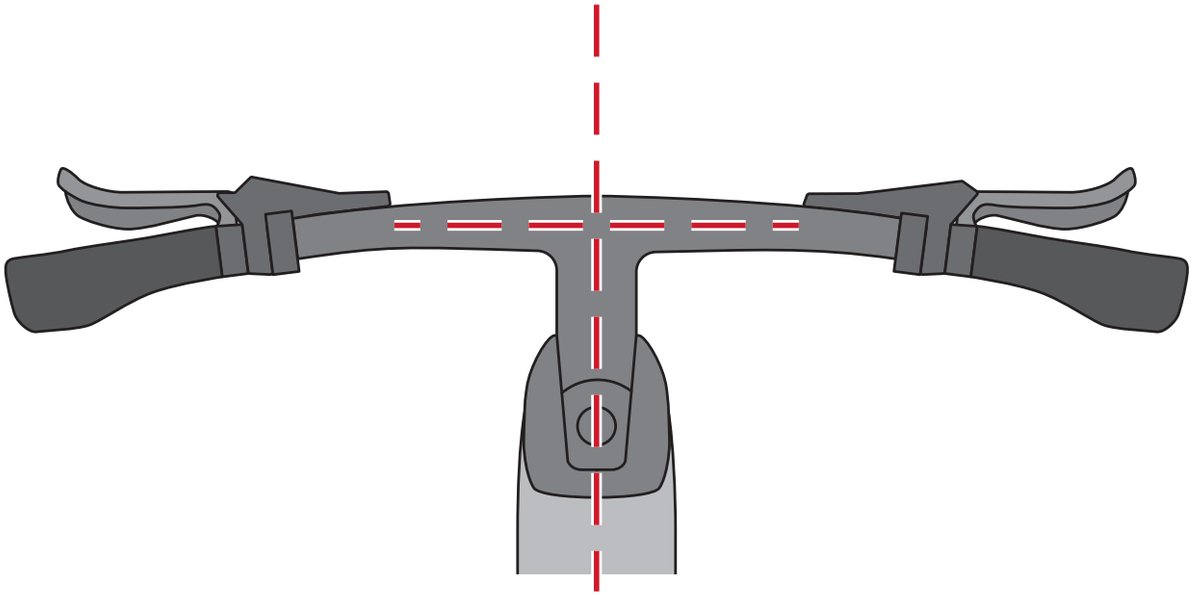

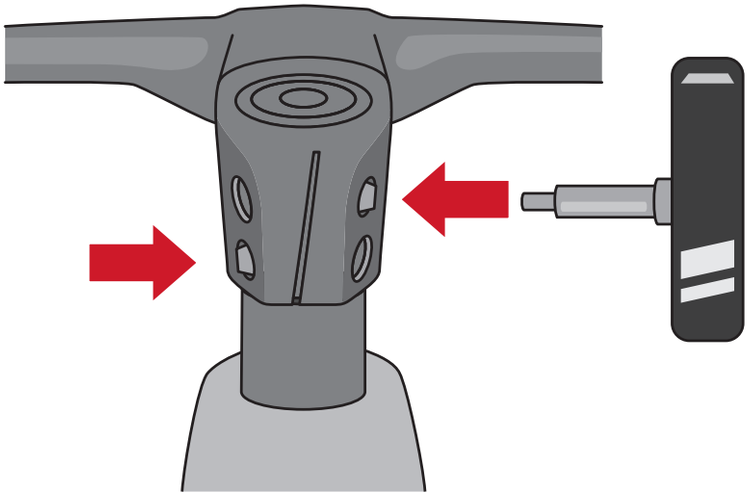

Skip to step 13

10 Attach and align the handlebar. Do not fully tighten the bolts (you will adjust the handlebar and tighten the bolts later).

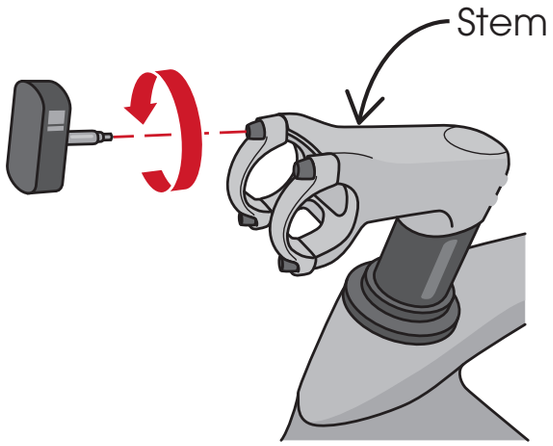

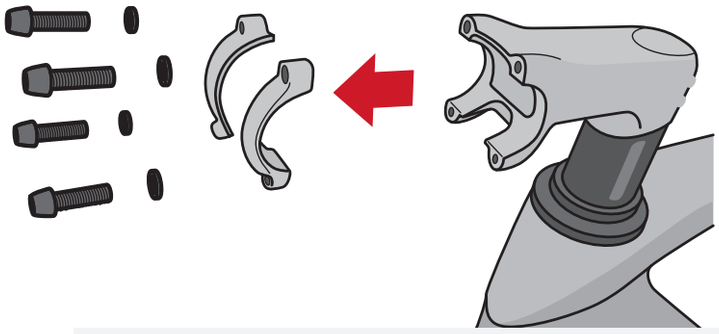

It›s okay to let the handlebar hang by the cables for a short time.

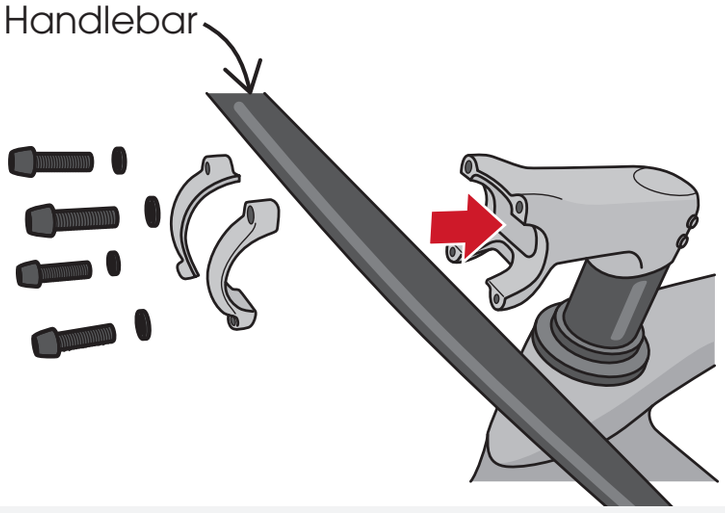

Make sure the cables are not pinched, routed over the stem, or between the faceplates and stem.

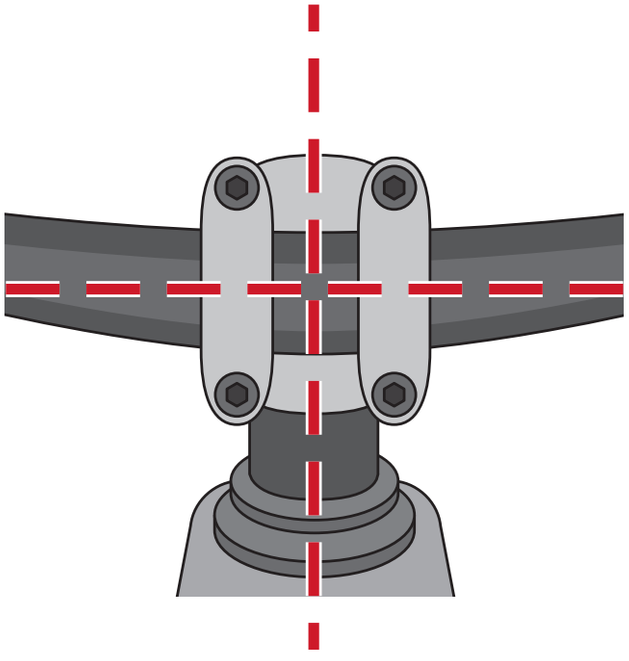

11 Is the bike a Session?

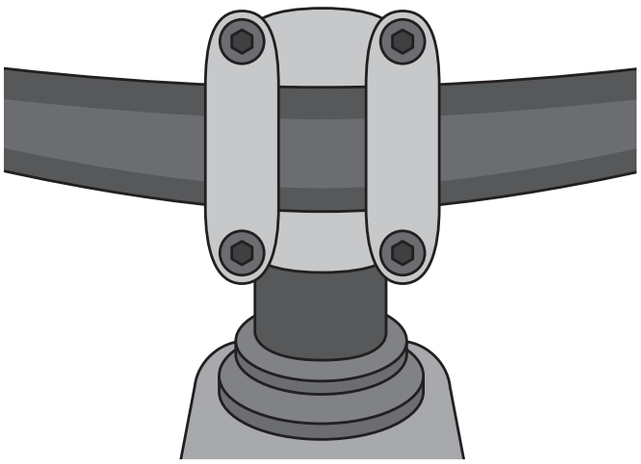

No

Skip to step 13

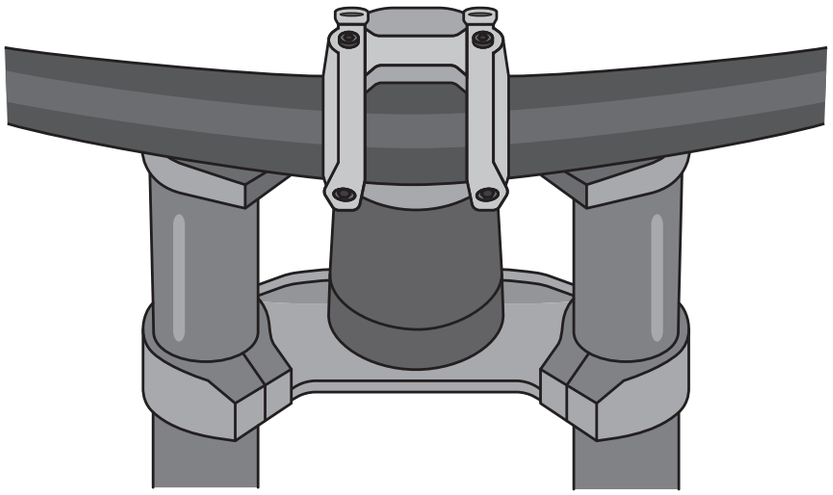

Yes

Go to step 12

12

Tighten the rear two faceplate bolts one half turn at a time — switching back and forth — until the tool clicks. Then fully tighten the front two.

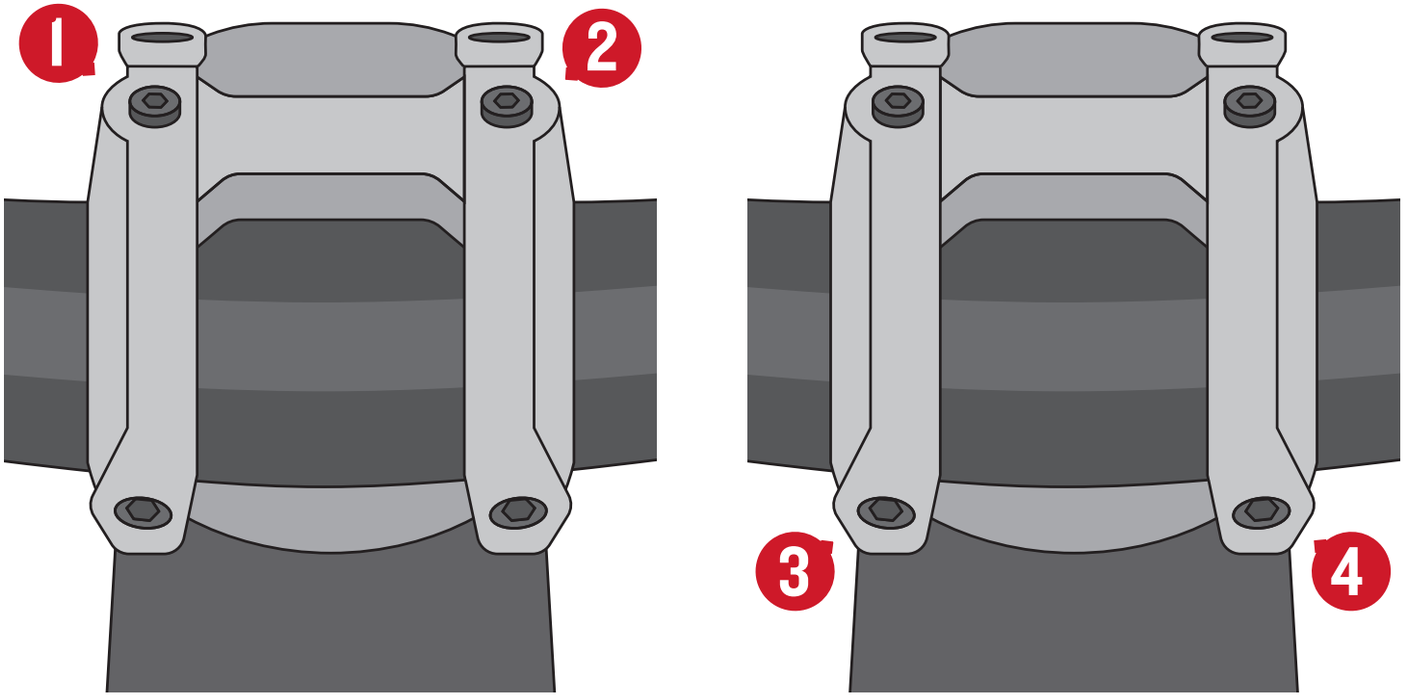

13

Install the pedals. Grease the pedal threads and clean the crank arm threads (there may be residue from the packaging strap). If included, install the washers over the pedal threads first.

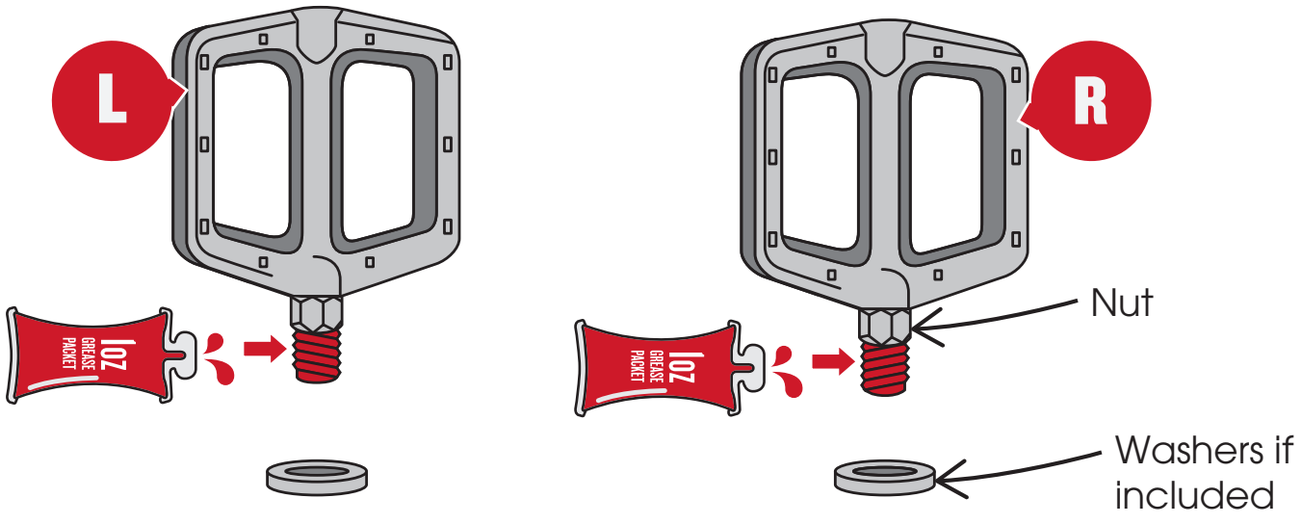

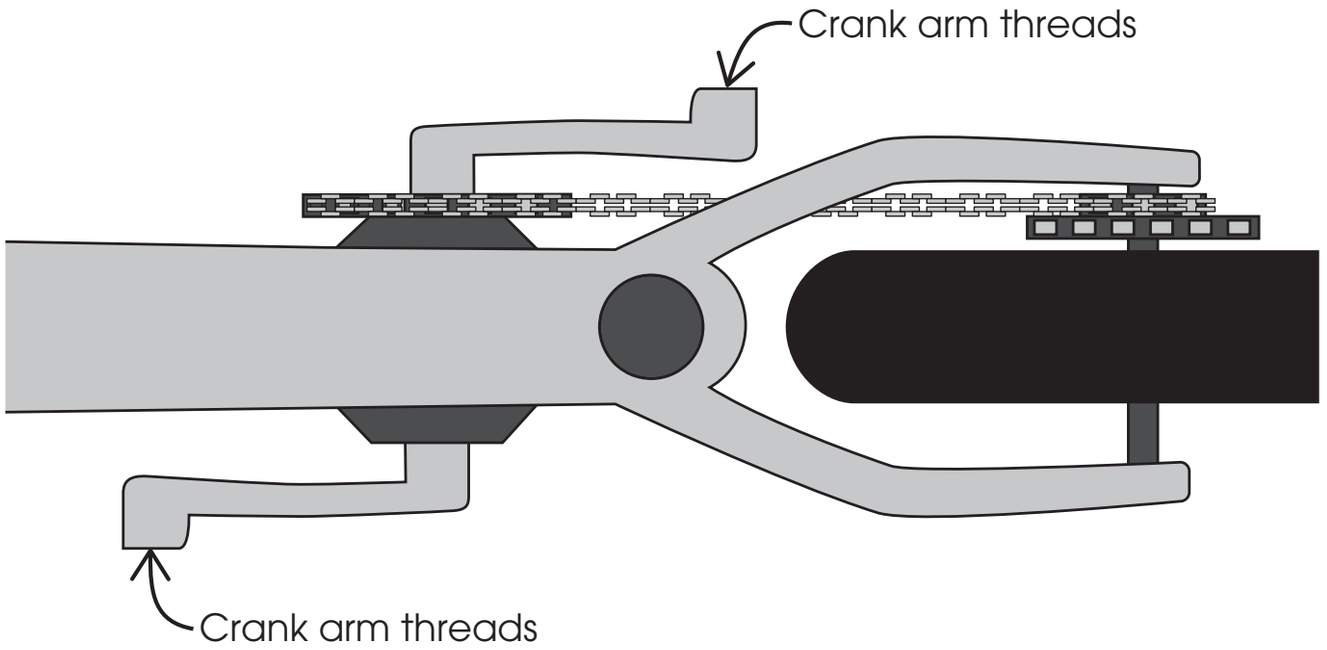

14 Thread the pedals in by hand — tightening by the nut, not the pedal. Then use the pedal wrench to fully tighten the pedals.

Both pedals tighten towards the front of the bike.

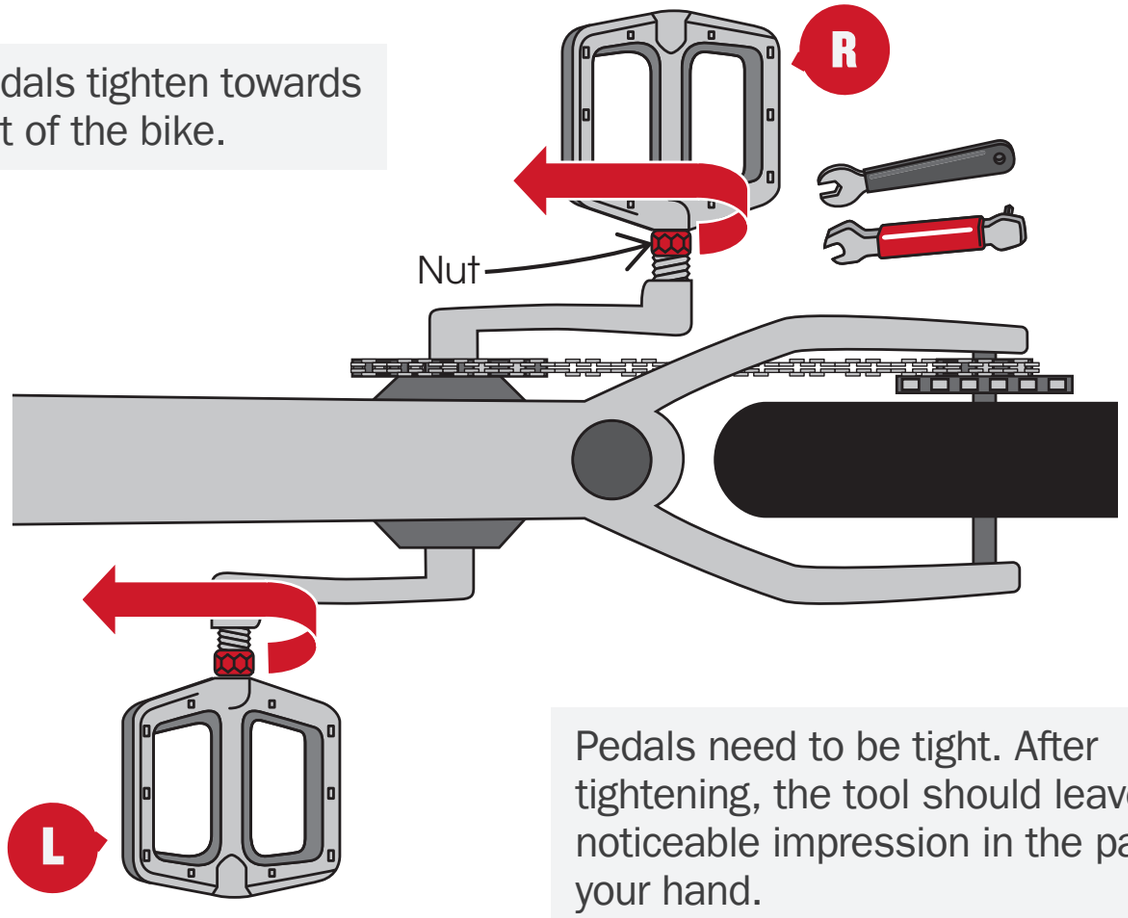

Pedals need to be tight. After tightening, the tool should leave a noticeable impression in the palm of your hand.

⚠ WARNING: The chainring has sharp points. Be careful when working around the chainring. Failure to do so may result in cut or pinched skin.

15 Do you need to install the front fender?

Powerfly Equipped

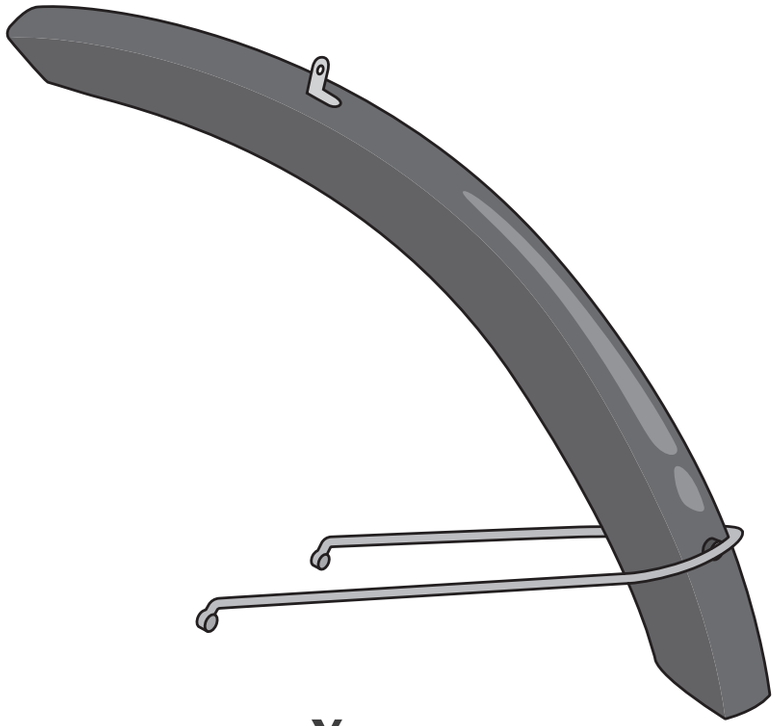

Yes

Go to step 16

No

Skip to step 18

16

Before removing the fender hardware on the fork, take pictures to help you remember how to reassemble (the fender will replace the fender tags).

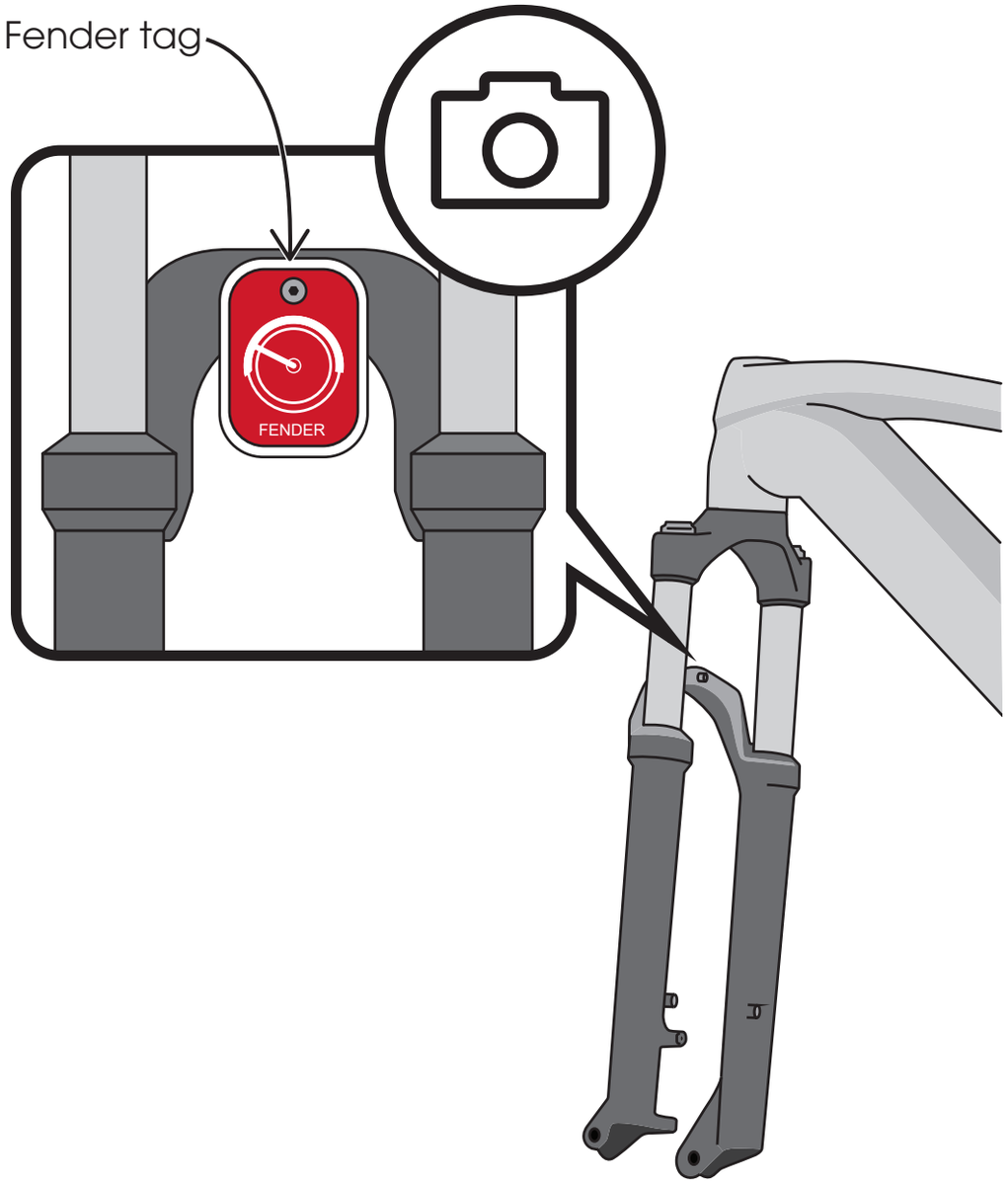

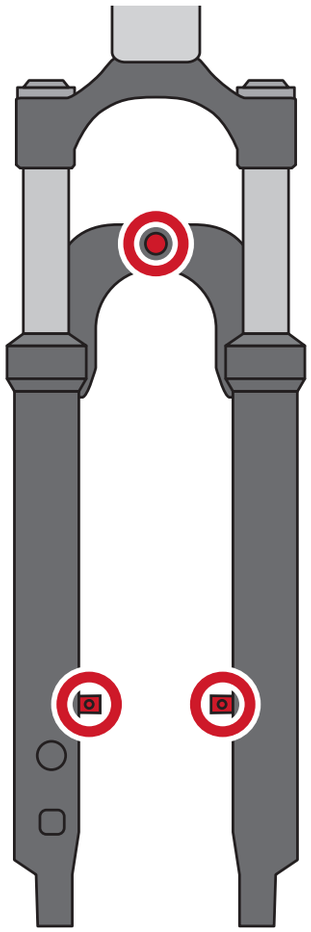

17

Attach the fender in place of the tag locations. Use all of the hardware that came attached to the bike — and in the same order — for the fender connections.

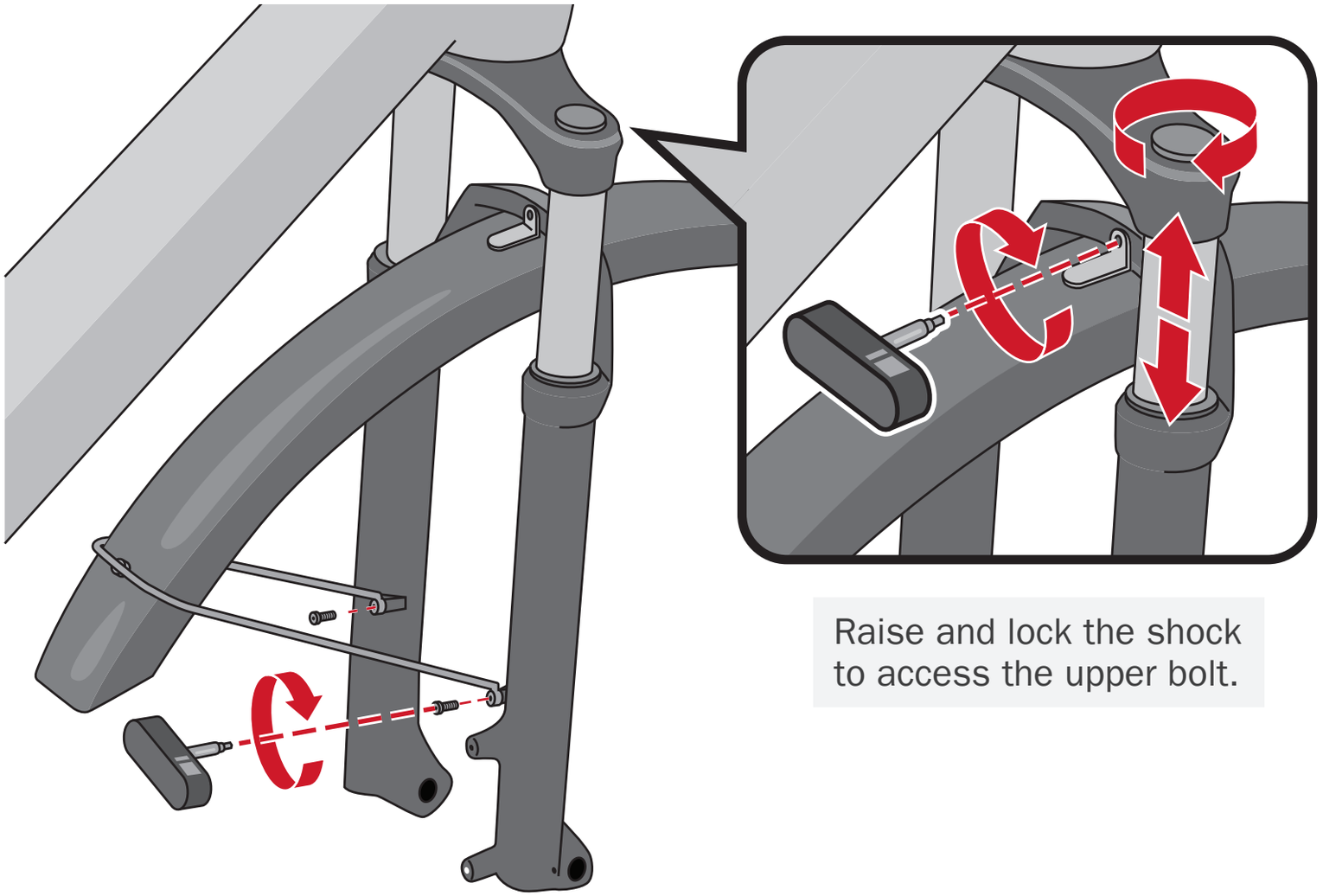

Raise and lock the shock to access the upper bolt.

⚠ WARNING: Only use Trek hardware. Install the fender using all of the fasteners supplied with your bike and in the same position. Do not use alternate/unauthorized fasteners.

18 Is there a front rack?

Farley 9

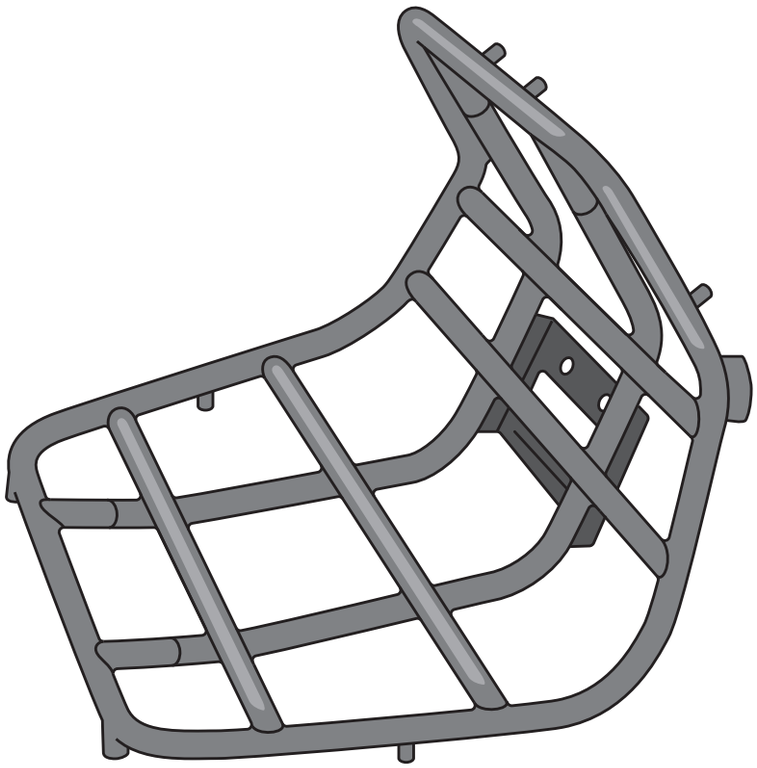

Yes

Go to step 19

No

Skip to step 20

19

Remove the hardware from the fork and install the front rack. Tighten the bolts one half turn at a time — in an X pattern — until you feel the tool click.

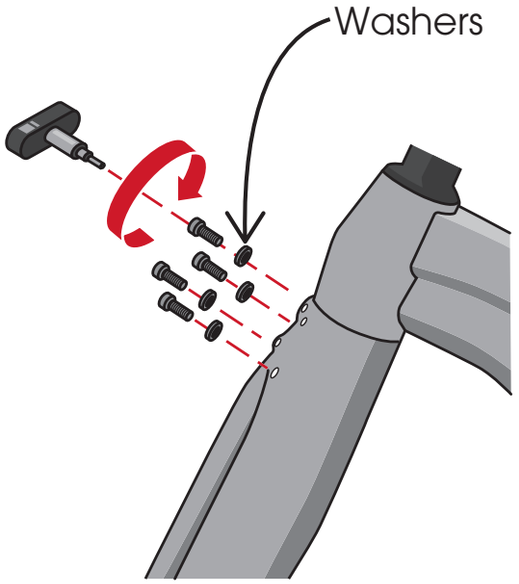

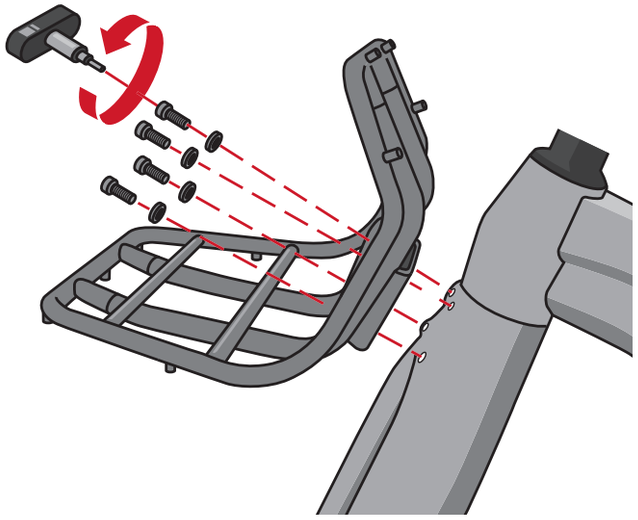

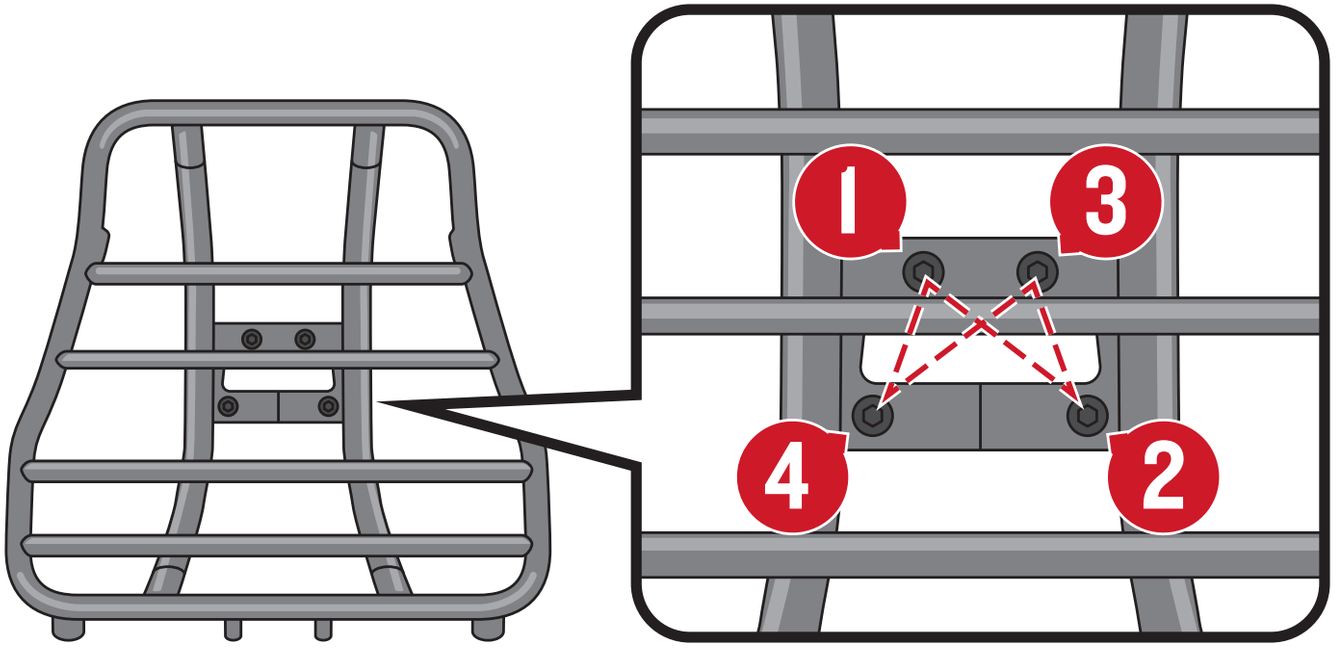

20 Remove the brake pad spacer.

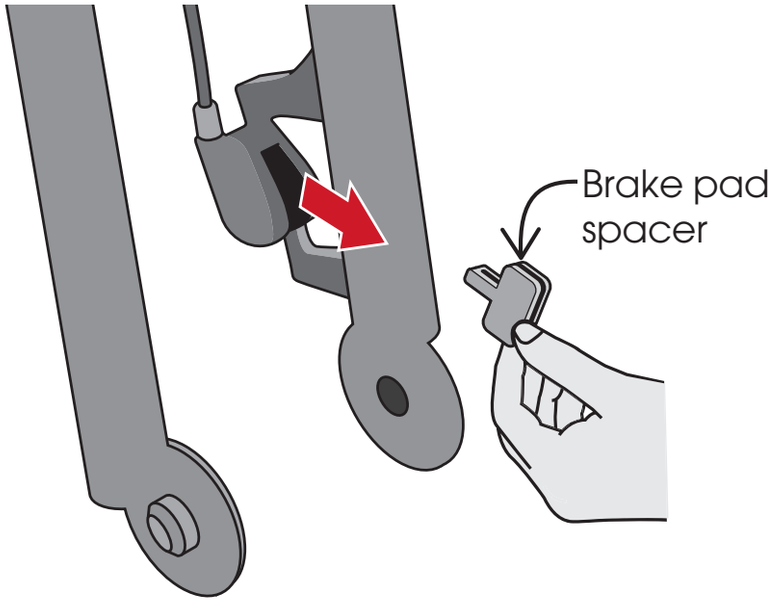

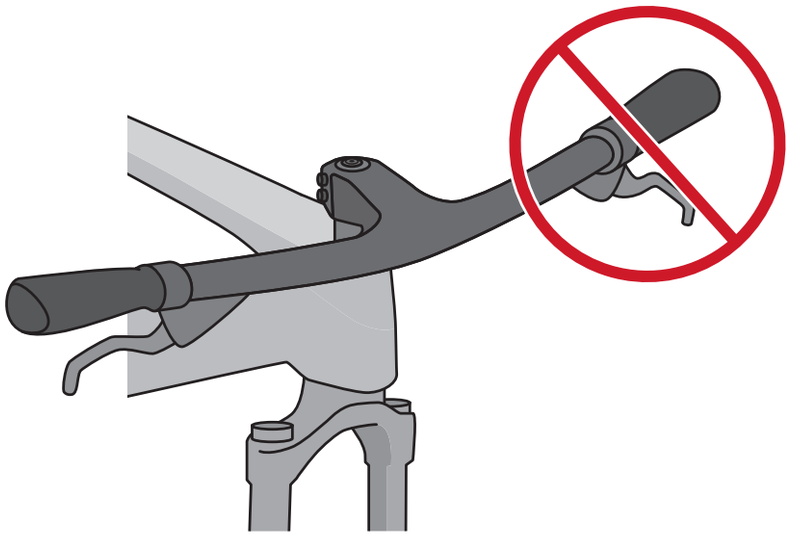

Do not squeeze the brakes after removing the pad spacer. This can close the brake pads and make it difficult to reopen them.

21 Remove the axle from the fork mount and remove the fork mount (remember which side you removed the axle from).

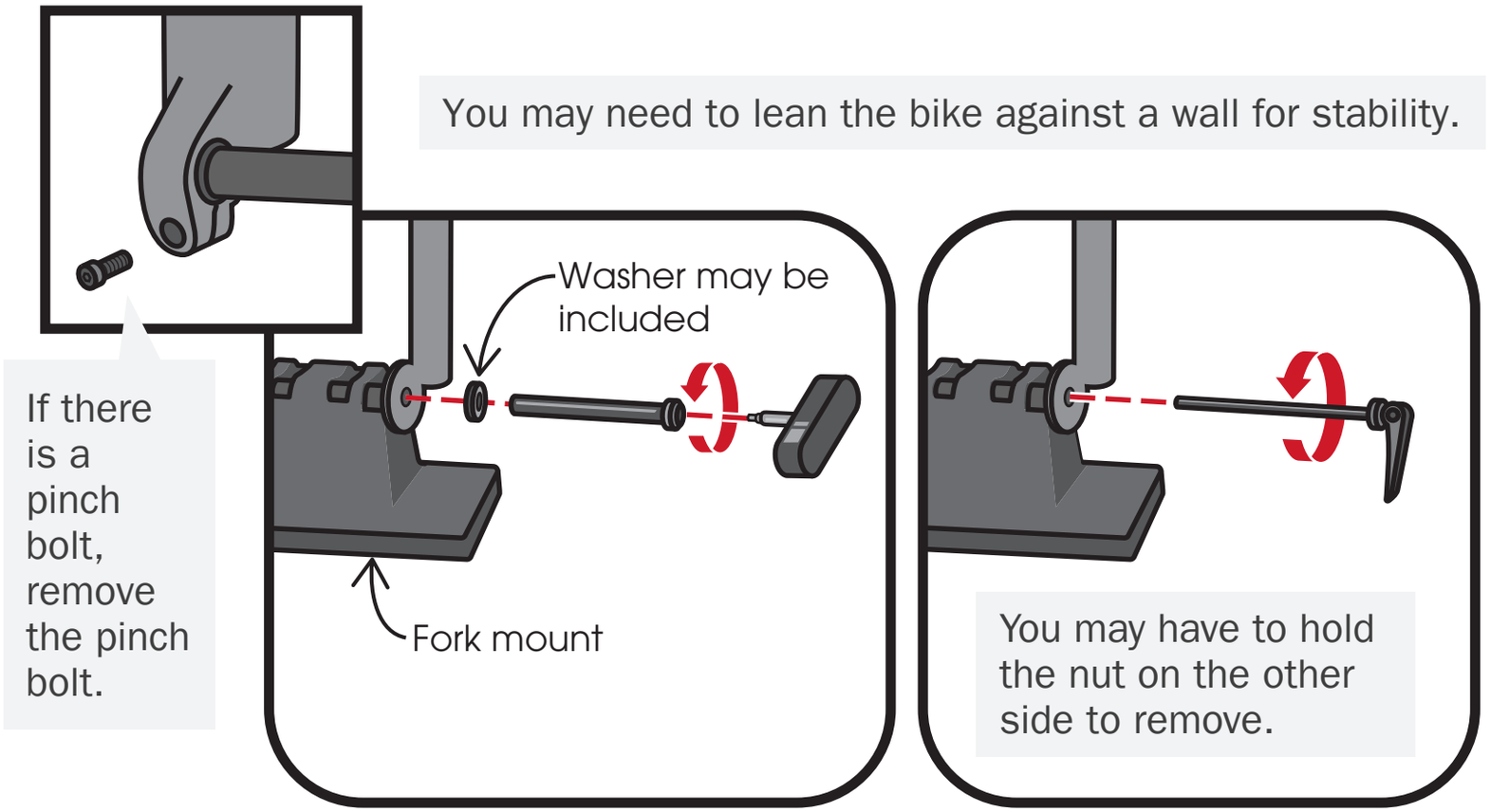

Was the axle secured with a nut?

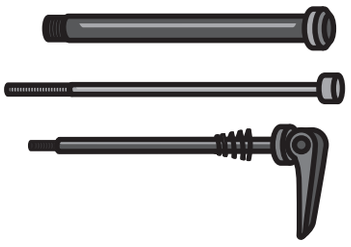

No

Go to step 22



Yes

Skip to step 23

EN

22

Grab the front wheel, lift the bike, and insert the front wheel. Install the axle and tighten until you feel the tool click.

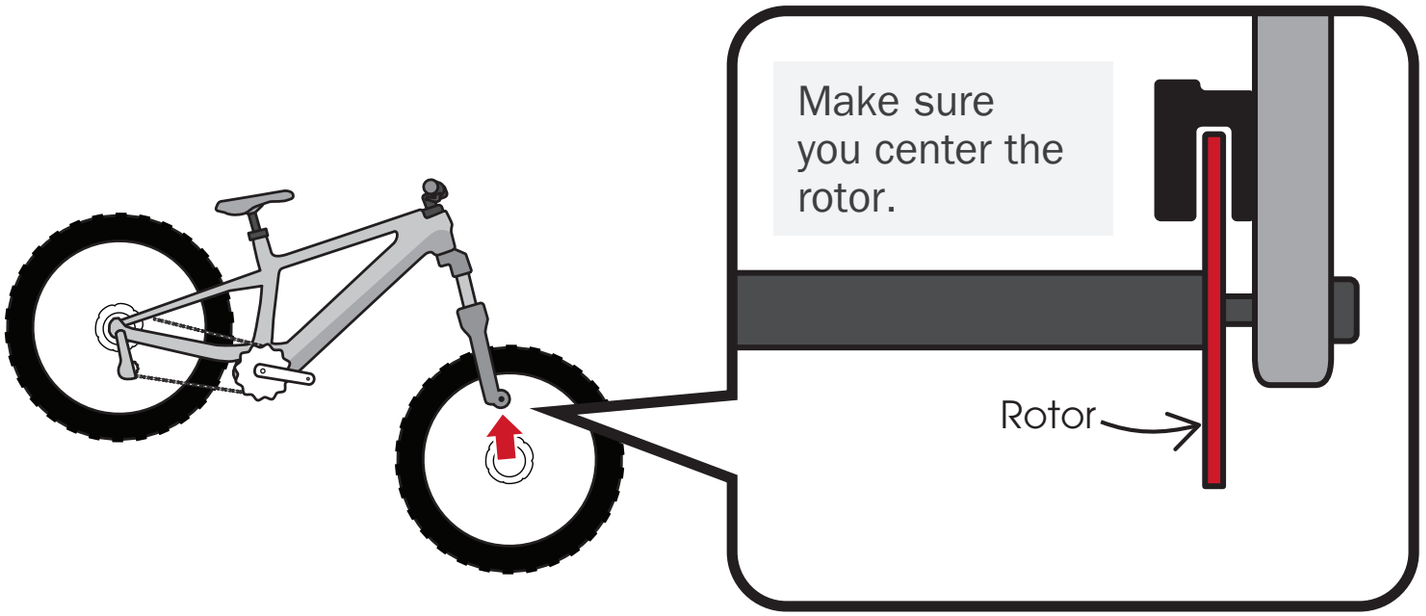

Some axles enter from the other side.

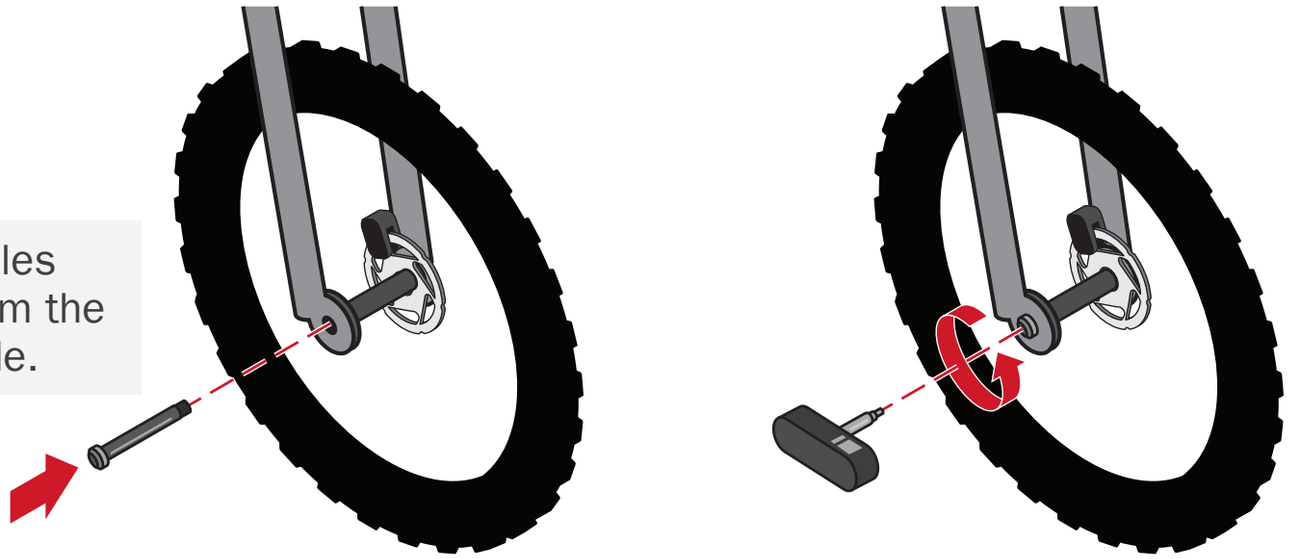

Skip to step 24

23 Grab the front wheel, lift the bike, and insert the front wheel. Then install the skewer axle. Hold the lever at about 5 o'clock and tighten the nut until you feel resistance. Then close the lever with your palm.

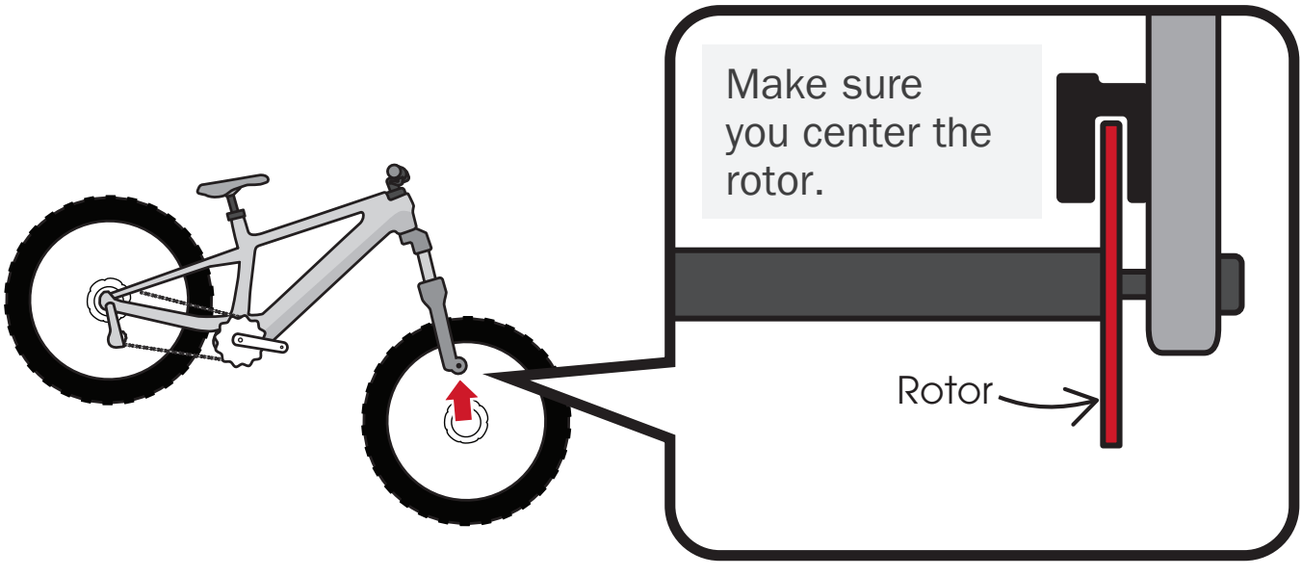

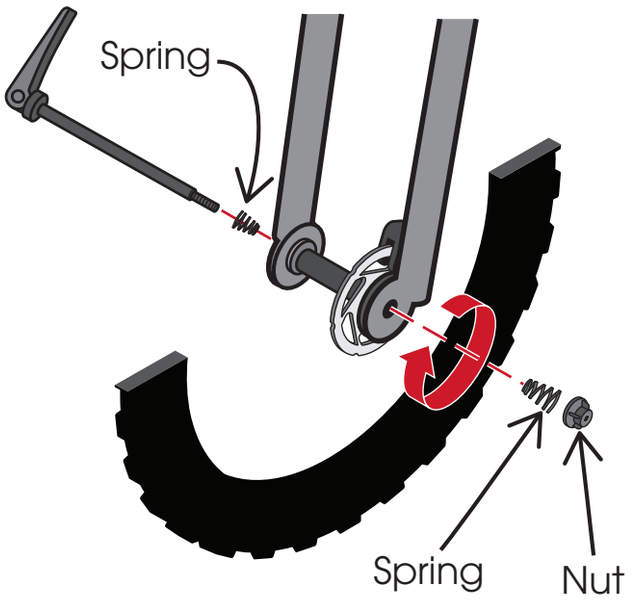

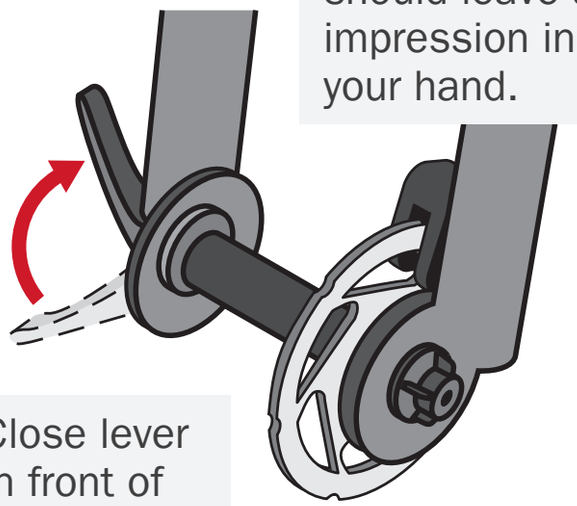

After tightening, the lever should leave a noticeable impression in the palm of your hand.

Close lever in front of fork leg.

24 **Inflate both tires — do not exceed the maximum tire pressure listed on the rim or tire. Recommended tire pressures are listed along with your suspension setup in the online Suspension Calculator (scan QR code below).**

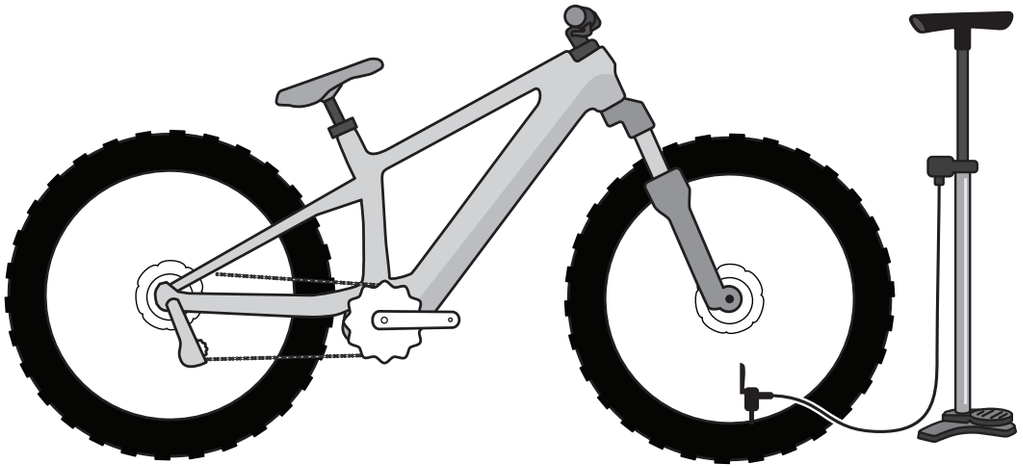

Suspension Calculator

To take full advantage of the performance characteristics of your bike, adjust tire pressure based on expected riding conditions.

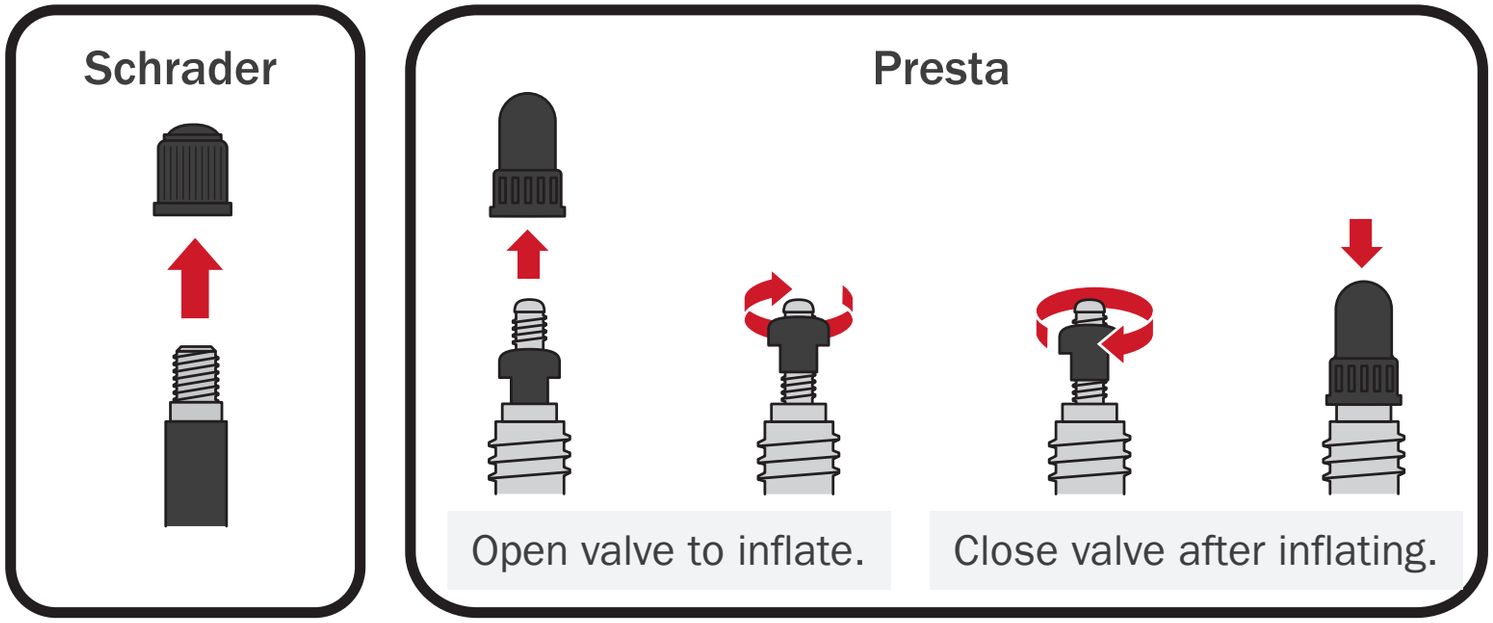

25

If necessary, Insert the seatpost and adjust the seat height to your riding preference. Tighten the clamp bolt.

If you have a dropper post, adjust the saddle height with the dropper fully extended. If you need to lower the dropper seatpost into the frame, pull out the cable housing from the frame an equal length (see Step 5).

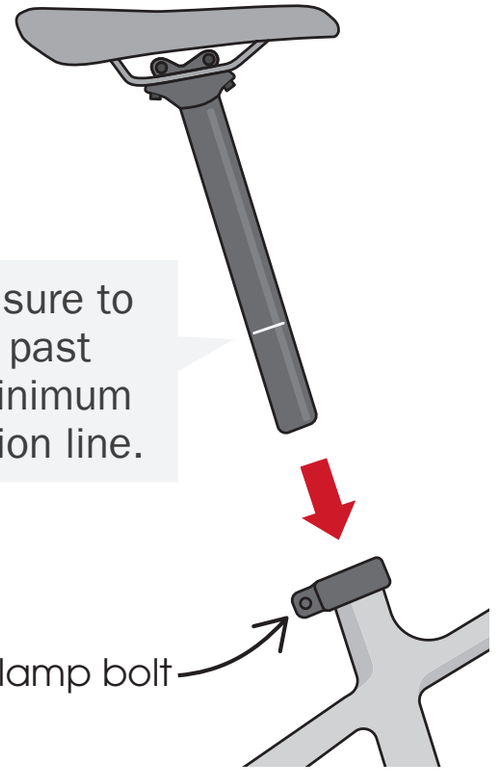

Make sure to insert past the minimum insertion line.

When adjusting the seat height on a bike with a dropper post, be sure to push/pull the dropper cable as necessary to avoid cable kinking.



In a normal riding position, your knee should be slightly bent at the bottom of your pedal stroke.

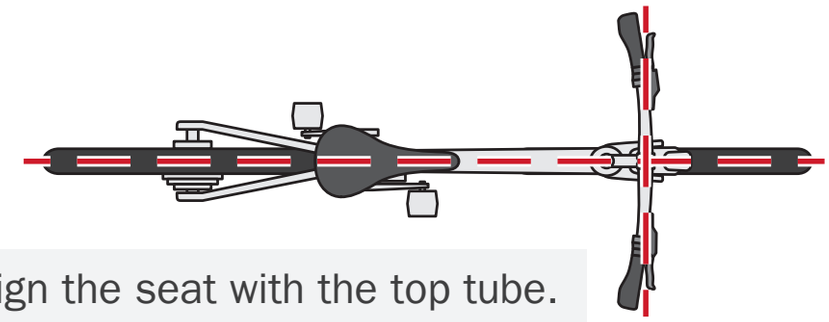

Align the seat with the top tube.

26

1. Align the handlebar/stem

If the handlebar/stem is not aligned with the front wheel, loosen the stem bolts, align it, and retighten the stem bolts — switching side-to-side — until you feel the tool click.

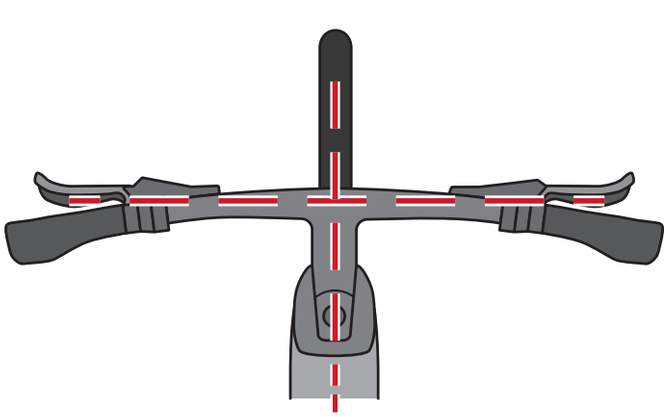

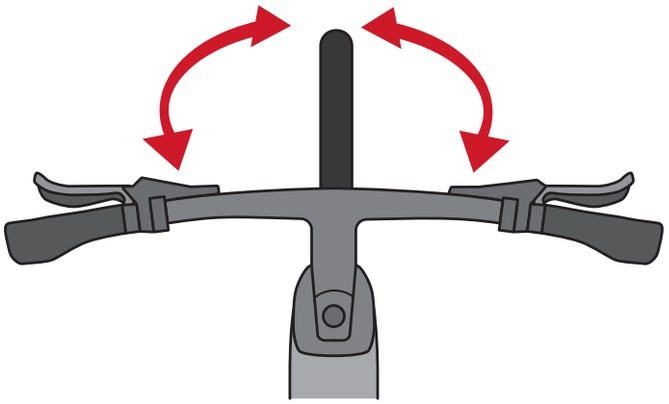

2. Verify steering tightness

Pick up the top tube and tap the handlebar with your hand.

- Too loose — the handlebar moves without touching it.
- Too tight — it takes force to move the handlebar.

If necessary, adjust the handlebar/stem tightness following the order on the next page.



27

3. Verify the handlebar/ stem assembly is tight

Pick up the bike by the handlebar/stem and drop it a few inches. If there is any noticeable looseness, adjust it following the order to the right. You may have to adjust the spacers so they fit tight.



Skip to step 30

Adjust handlebar/stem

1. Loosen the stem bolts

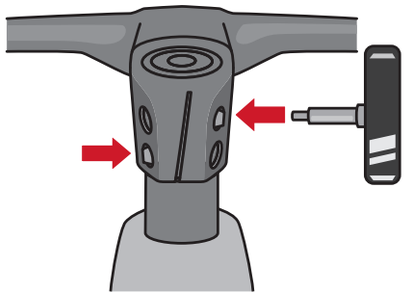

2. Tighten/loosen top cap bolt 1/8 turn at a time and retest

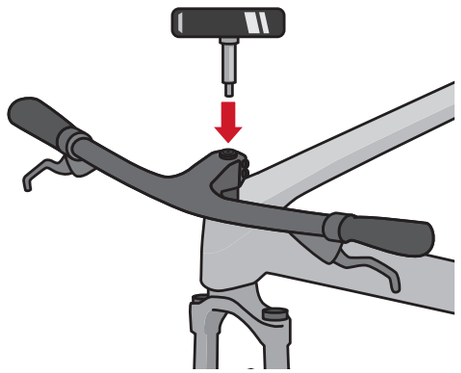

3. Tighten stem bolts

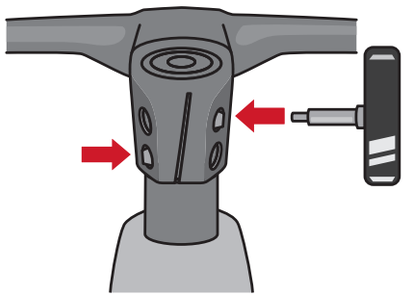

28

Now that the front wheel is installed, align the handlebar (you may need to loosen the faceplate bolts).

Adjust the handlebar so the levers are about 45° to the ground.

Center the handlebar between faceplates.

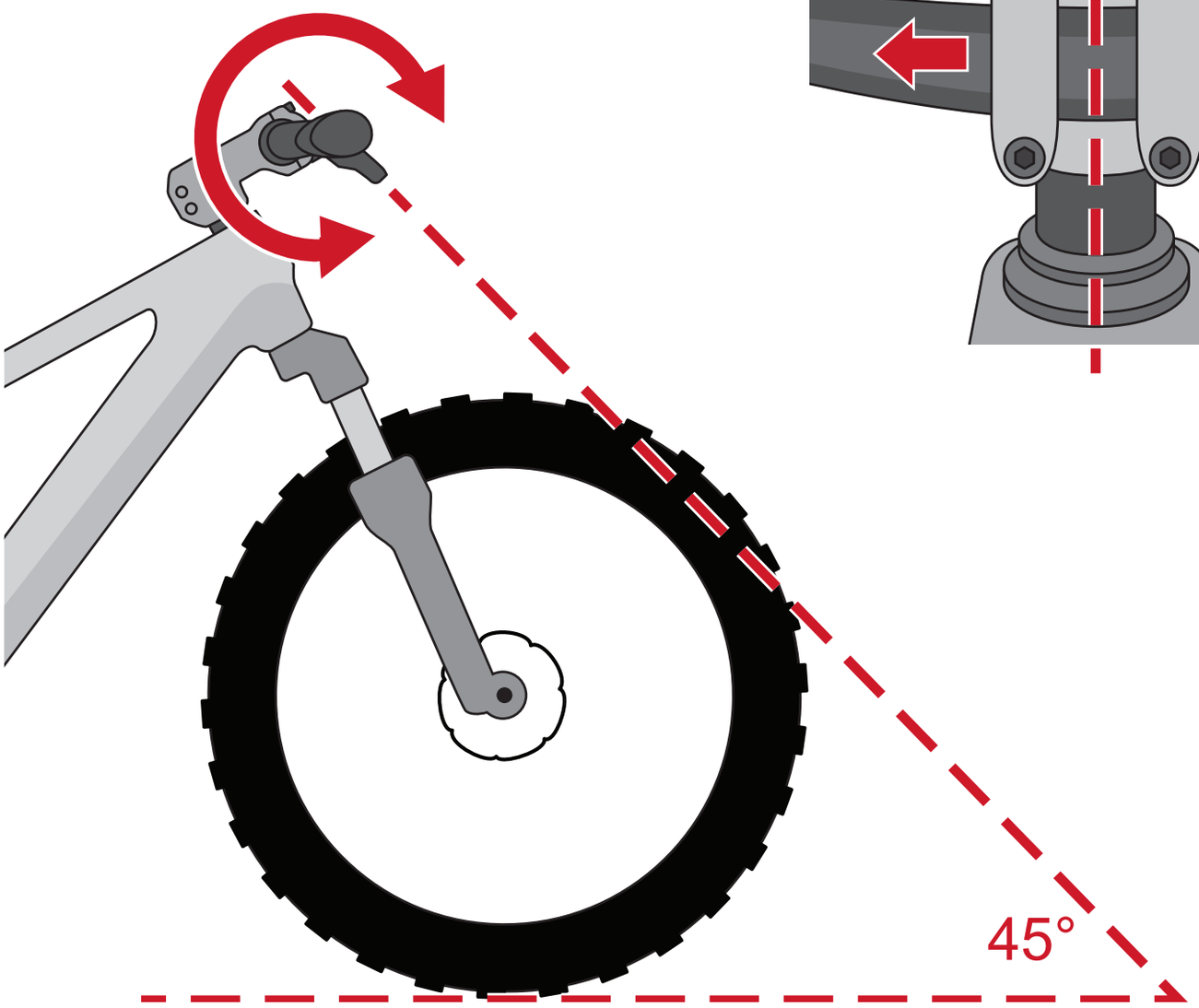

29 Tighten the faceplate bolts one half turn at a time — in an X pattern — until you hear the tool click.

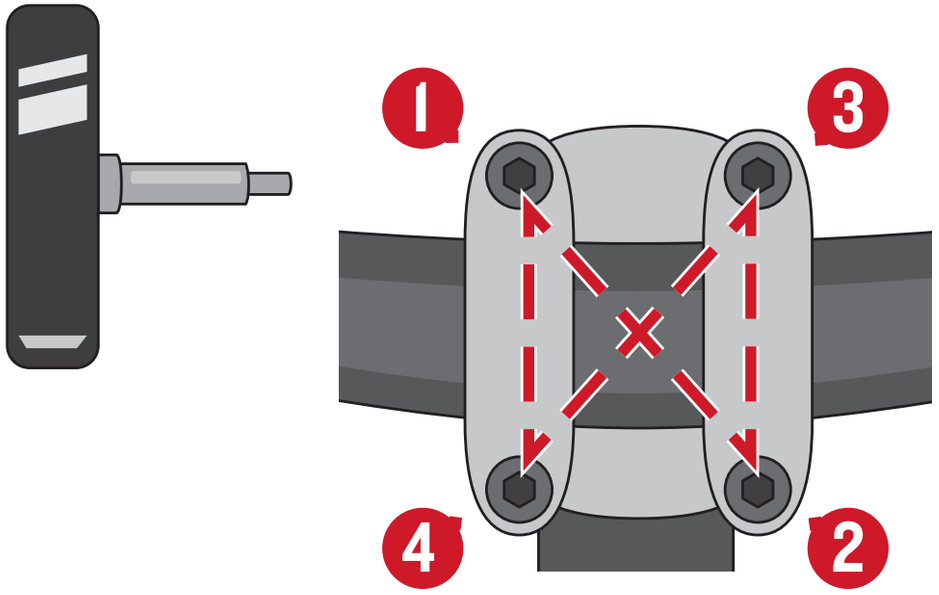

Make sure the gap is equal on the top and bottom. If the spacing is unequal, loosen the bolts and retighten them following the order above.

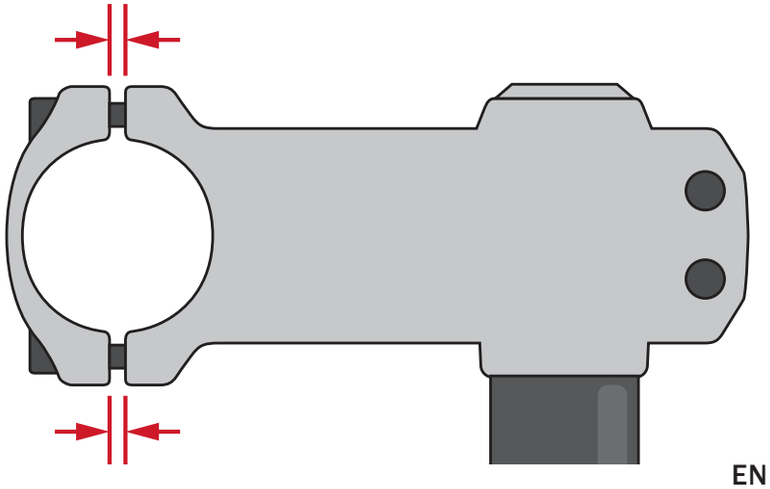

30 Go to the online Suspension Calculator and determine your suggested suspension settings. Then apply your suspension settings.

Mountain bikes require a small amount of set up for the individual rider. Adjusting these settings will optimize your suspension performance.

Suspension Calculator

How to set up your suspension

How to use a shock pump

1. Tighten the silver knob.
2. Tighten the red knob.
3. Inflate the suspension based on your settings determined above.
4. Loosen the red knob.
5. Loosen the silver knob.

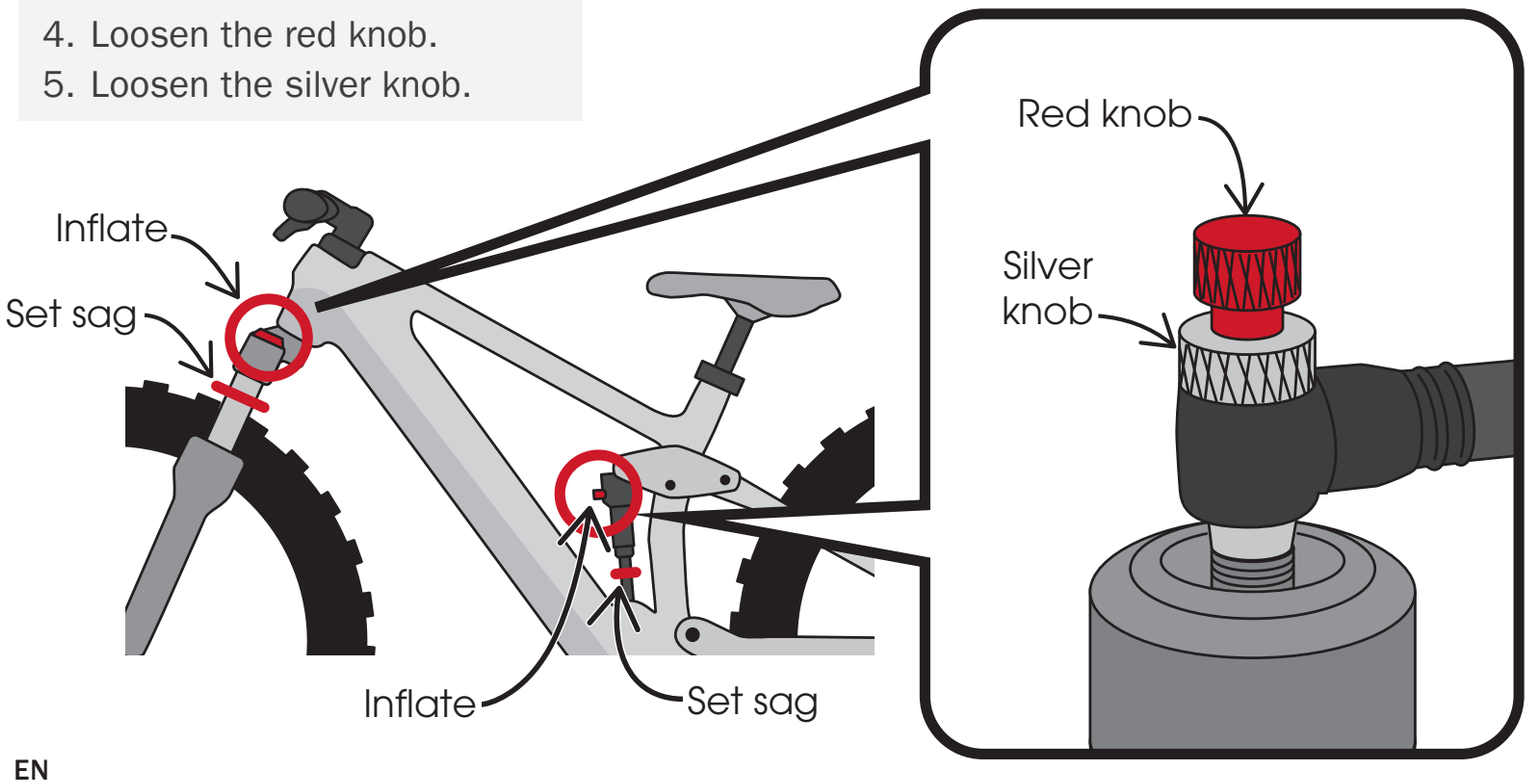

BICYCLE ASSEMBLY CHECKLIST

Before and after your first ride, complete this checklist:

- ☐ Dropper post installed correctly? *(Step 5)*
- ☐ Handlebar/stem combo properly installed? *(Steps 7-9, 26-27)*
- ☐ Handlebar aligned and faceplate bolts properly tightened? *(Steps 10, 28-29)*
- ☐ Pedals installed correctly and tightened? *(Steps 13-14)*
- ☐ Front fender installed correctly? *(Steps 16-17)*
- ☐ Front rack installed correctly? *(Step 19)*
- ☐ Front wheel installed correctly? *(Steps 20-23)*
- ☐ Final checks performed? *(Steps 26-30)*
- ☐ Seatpost installed correctly? *(Step 25)*
- ☐ If you have an ebike, read the included Quick Start Guide and charge the battery
- ☐ Read the Trek Owner's Manual (included with your bike).
- ☐ Register your bicycle.
- ☐ Perform a pre-ride check.

For more detailed information, see the service manual on Trekbikes.com > click on your bike > Service > Service manual.

Register your bike at trekbikes.com/productRegistration/

Watch the Pre-Ride Check video on the Trek Bicycle YouTube channel.

WARRANTY: For information about your bike's warranty, please see trekbikes.com/inside_trek/warrantied_for_life.

QUESTIONS? Please contact your local Trek bike shop, call Trek Customer Care at 1-800-585-8735 from 10am – 6pm Monday – Friday CST, or chat with us at trekbikes.com/contactus.

RIDE BIKES
HAVE FUN
FEEL GOOD

TREK

PN 5327031