


# 2024 MARLIN+

## SERVICE MANUAL

Rev 1 November 2023

# Contents


**Safety**



Safety

**Rear axle**

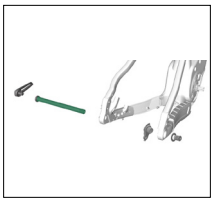

Rear axle

**Guards**



Guards and covers

**Routing**

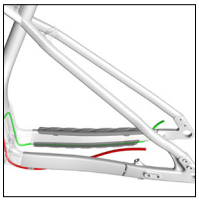

Brake and rear shift routing



Seatpost Seatpost dropper post routing



Speed sensor routing



Battery and remote routing

**Motor and battery**

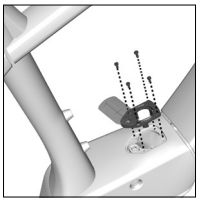

Charge port cover

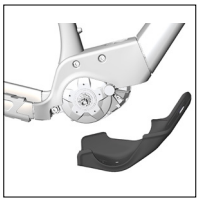

Motor guard

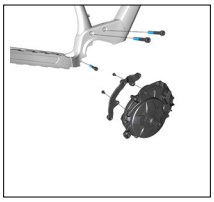

Motor parts



Lower the motor

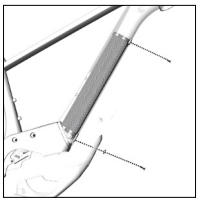

Battery parts

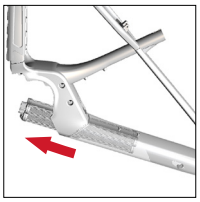

Remove the battery

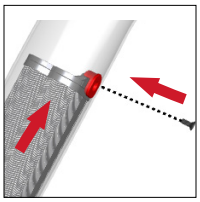

Install the battery

**Fenders and racks**



Rear fender — 29” wheel

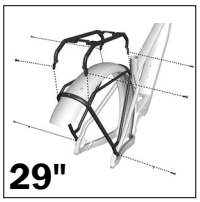


Rear rack — 29” wheel




Rear fender — 29” wheel




Rear rack — 27.5” wheel




Rear fender — 27.5” wheel

**Light routing** (optional)

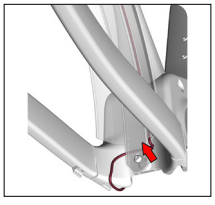

Rear light routing – thru the fender

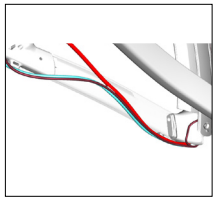

Rear light routing — thru the chainstay

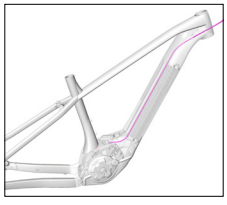

Front light routing

**Specs**

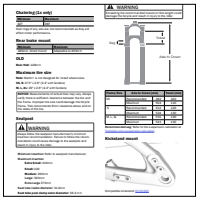

Specifications


Copyright 2023 Trek Bicycle Corporation All Rights Reserved

# Safety

**WARNING**

**Properly tighten hardware**

Always tighten hardware to the specified torque. Over-tightening hardware could deform or break the hardware or components. Under-tightening hardware could cause hardware or components to become loose. Either situation could damage the bicycle and result in injury to the rider.

**WARNING**

**Reapply threadlocker**

All reused-fasteners with pre-applied threadlocker must be cleaned with isopropyl alcohol and have new threadlocker applied before re-assembly. If threadlocker is not applied, the fasteners may loosen which could damage the bicycle and result in injury to the rider.

# Legend

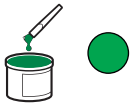
Apply grease


Do not apply grease


Apply threadlocker

Nm — Torque

★ Zip tie

# Scope

This manual contains parts diagrams, specifications (such as grease and torque values), instructions, and helpful tips. It does not contain instructions for all components (such as brake calipers). Refer to the original manufacturer for more information.

# Additional resources

- Bosch Purion remote quick start guide: *trekbikes.com/manuals*
- Bosch E-bike Owner's Manual: *trekbikes.com/manuals*
- Trek's YouTube channel: *youtube.com/trekbikes*

# Rear axle

This bicycle frame is designed to use a Universal Derailleur Hanger (UDH). For additional information about the UDH, refer to the SRAM user manual at [sram.com.](sram.com)

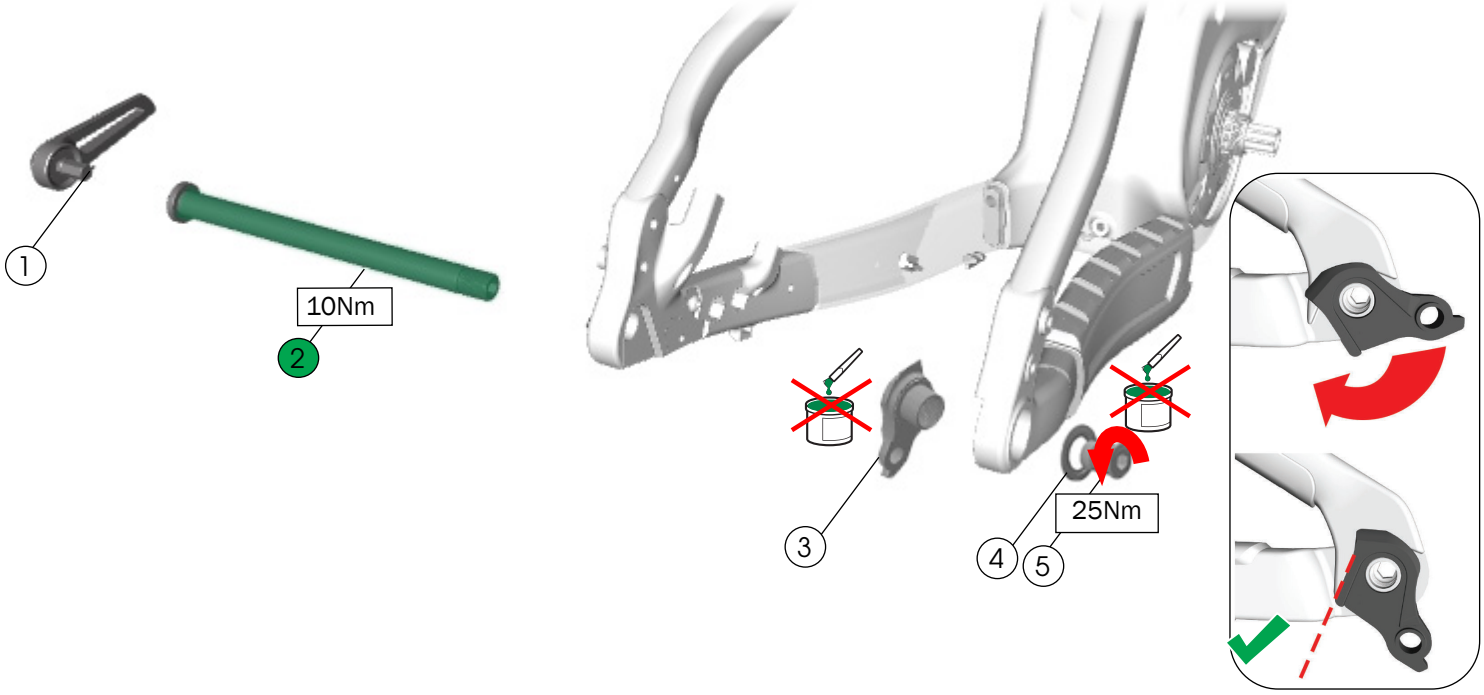


1. Switch lever — *W573860*
2. Thru axle, 12mm — *W600321*
3. Derailleur hanger
   **NOTICE:** Do not apply grease.
4. Washer, 25mm
   **NOTICE:** The washer is frame-specific. Install only the washer size specified.
5. Bolt, M12
   **NOTICE:** Do not apply grease. Do not overtighten. Overtightening may damage the hanger.

— *W5271425*

# Brake and rear shift routing

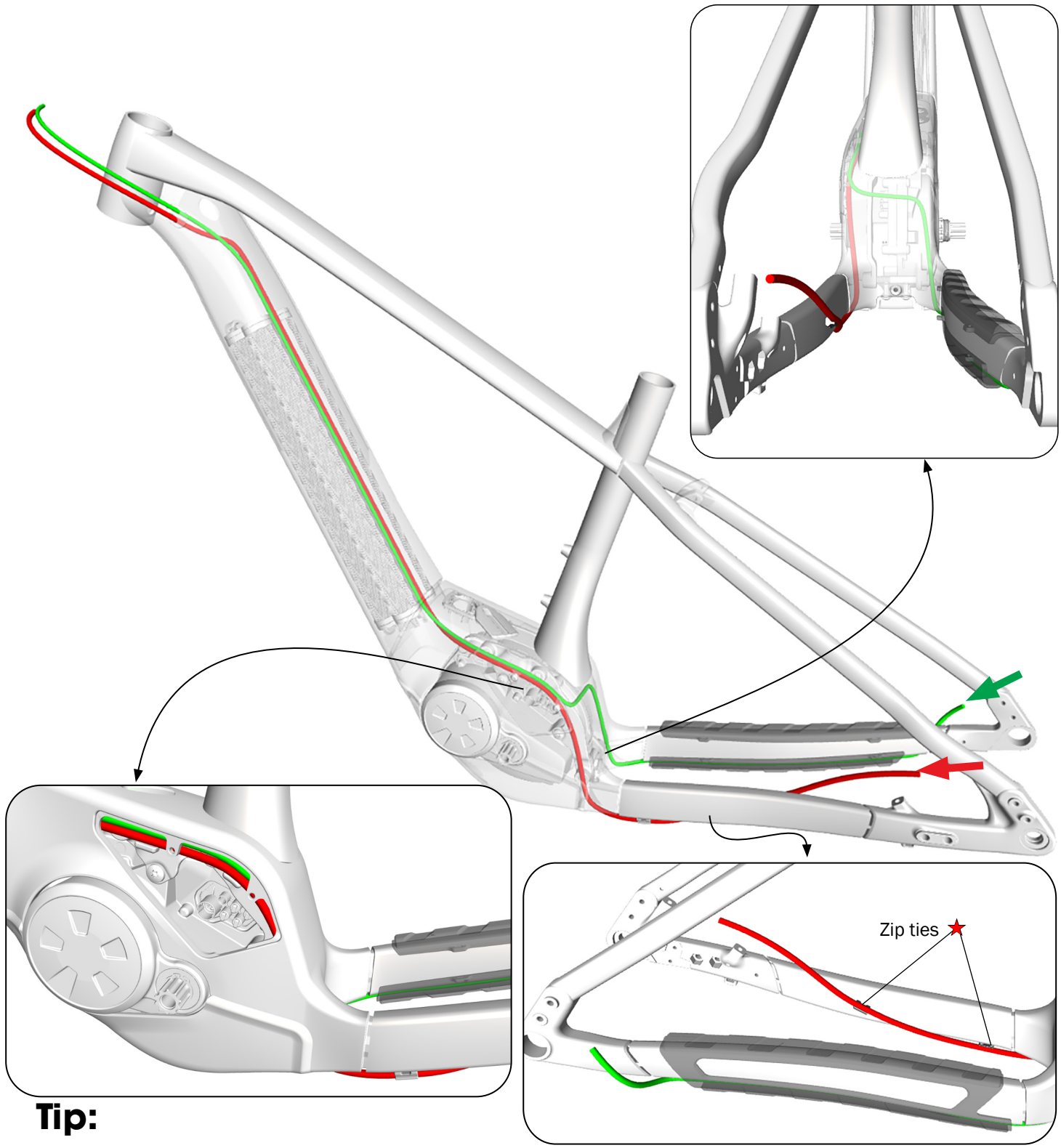


## Tip:

Remove the non-driveside motor cover to easily route the brake hose and rear shift housing.

# Seatpost dropper post routing

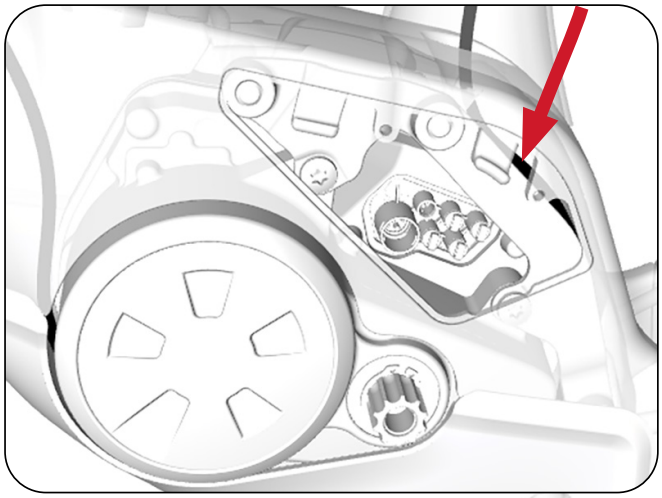

## Tip:

Remove the non-driveside motor cover to easily route the housing up the seat tube.



## Tip:

Remove the motor guard to easily route the housing under the motor.

If routing the housing without the motor installed, be sure to leave extra slack in the housing to eventually route under the motor.

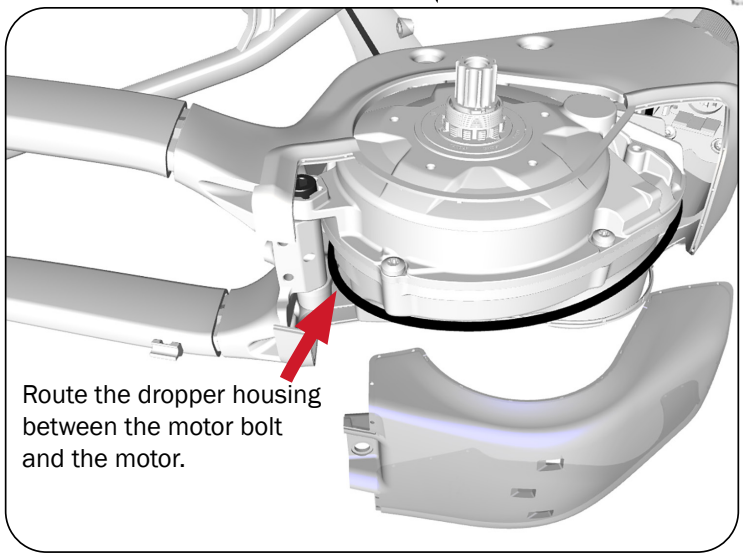

Route the dropper housing between the motor bolt and the motor.

# Speed sensor routing

Refer to the Bosch service manual for instructions on installing the speed sensor components.

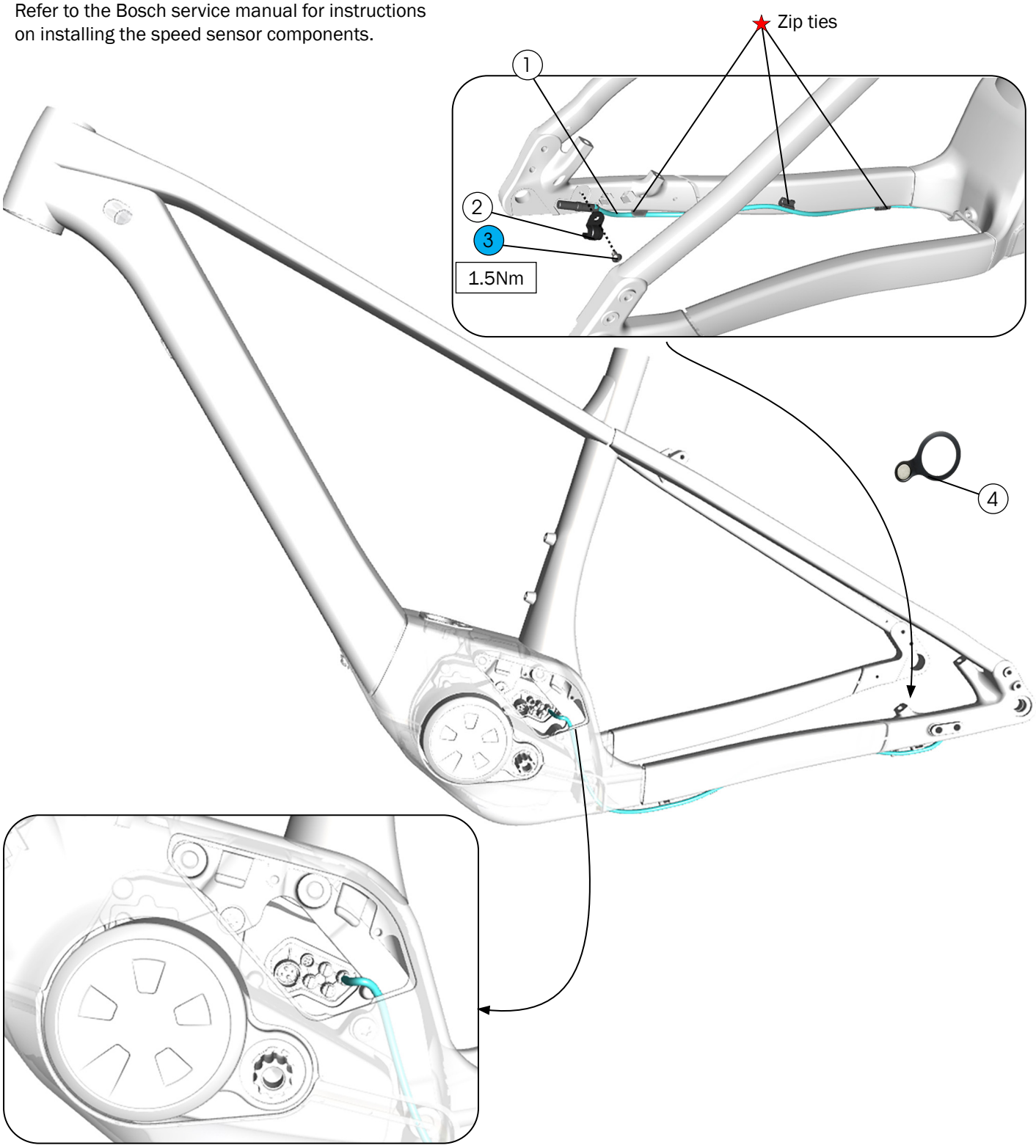


Non-drive side shown. Motor cover removed.

1. Speed sensor cable:
   Bosch part number — EB11.200.011
   Trek part number (available in some markets) — *5318757*
2. Speed sensor clip, Bosch part number 1270.016.038
3. Fastener, M4x6mm — *W575056*
4. Speed sensor magnet — *599404*

# Battery and remote routing

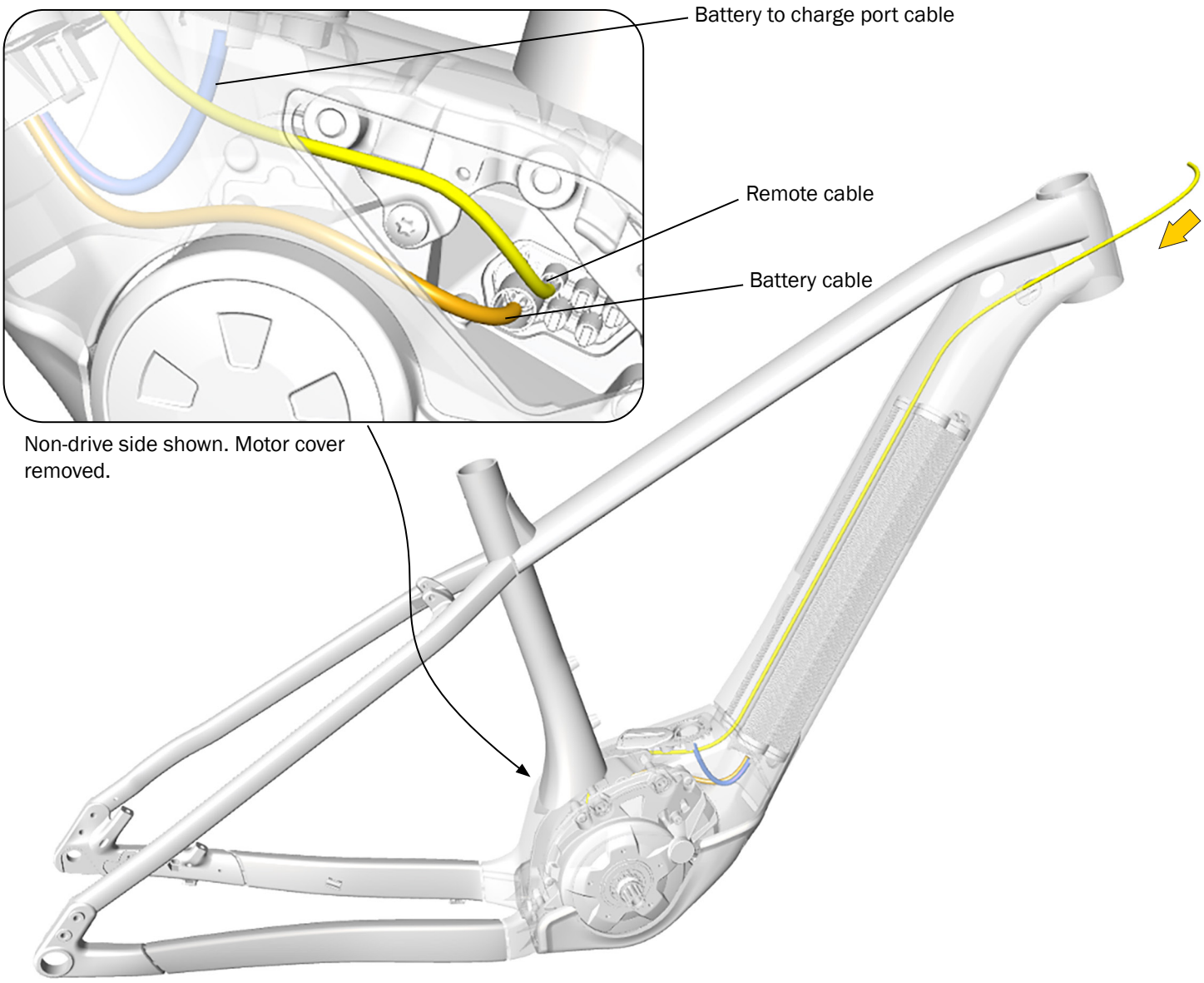

# Frame guards and covers

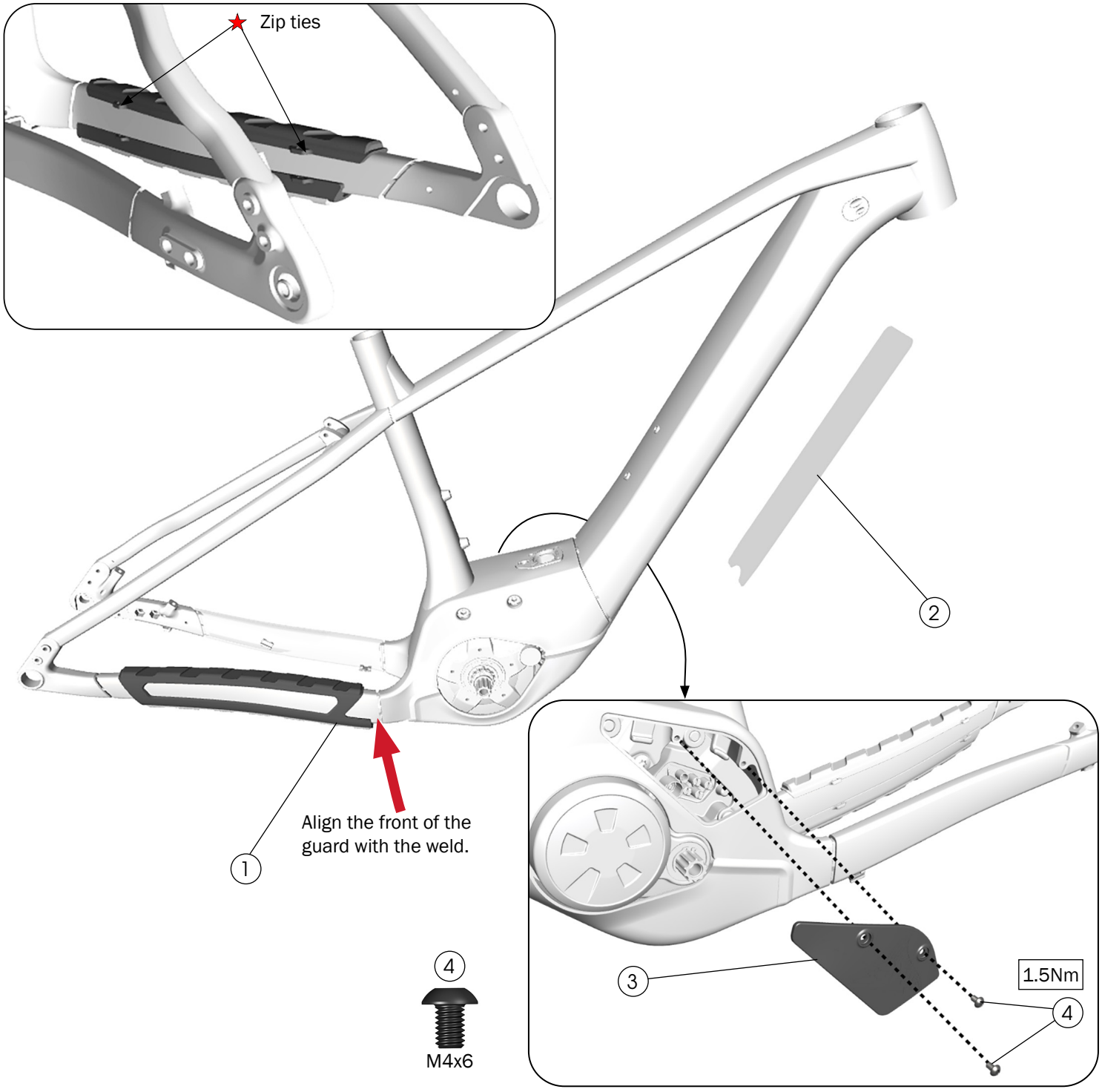


**Non-drive side**

1. Chainstay guard — *W5308950*
2. Downtube guard — *W5312189*

Use isopropyl alcohol to clean the frame surface where the guard attaches. Wait for the alcohol to dry before applying the guard.

**NOTICE:** Do not clean the entire frame with isopropyl alcohol. Isopropyl alcohol could damage the paint.

3. Motor access cover — *5312747*
4. Fasteners, M4x6 — *W575056*

**NOTICE:** Maximum fastener length is 6mm. Longer fasteners could damage the brake hose and rear shift housing.

# Charge port cover

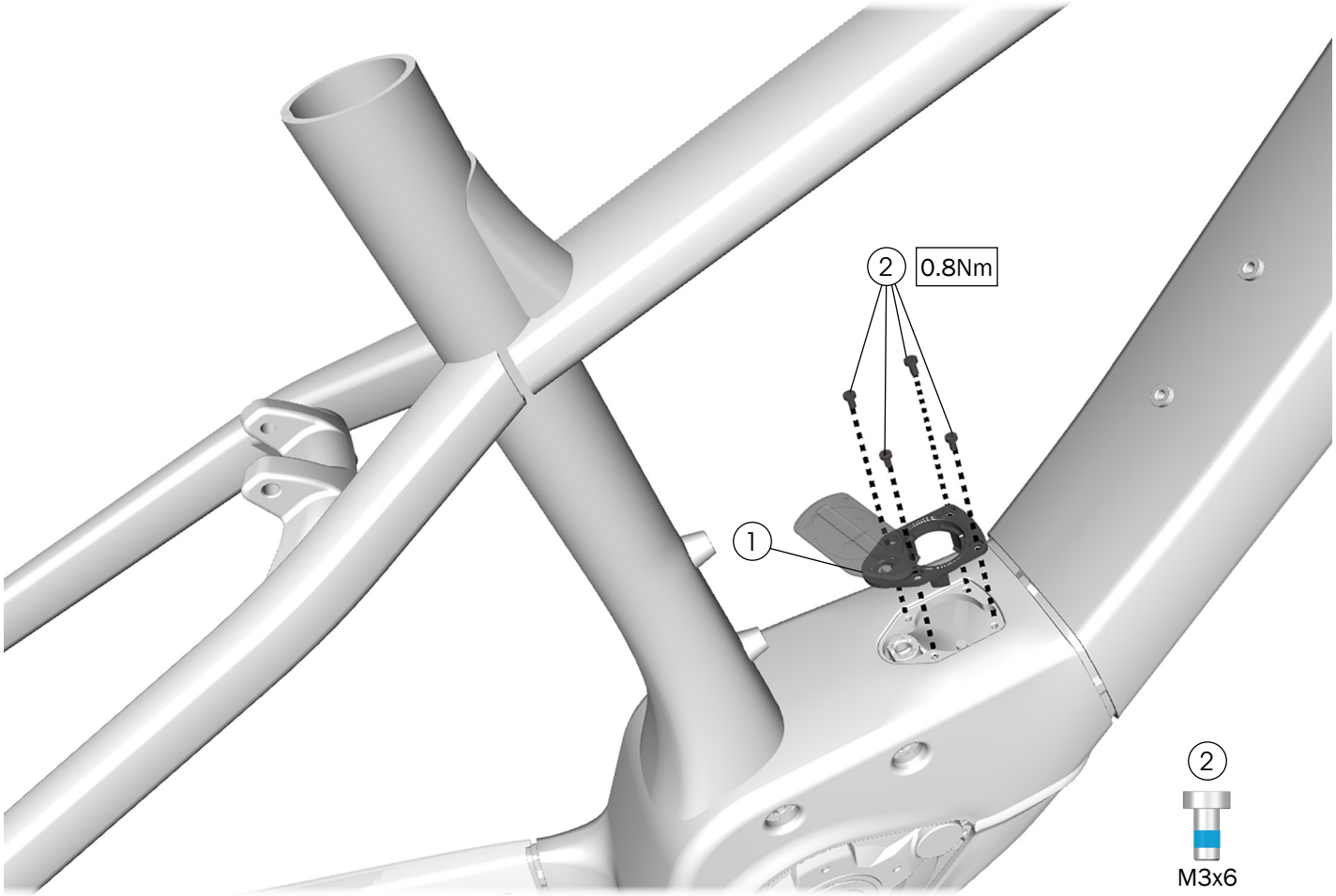


1. Charge door assembly — *W5312791*
2. Fasteners, M3x6 — *W5276241*

# Motor guard

When re-installing the motor guard make sure the rubber seals are positioned outside the bike frame.

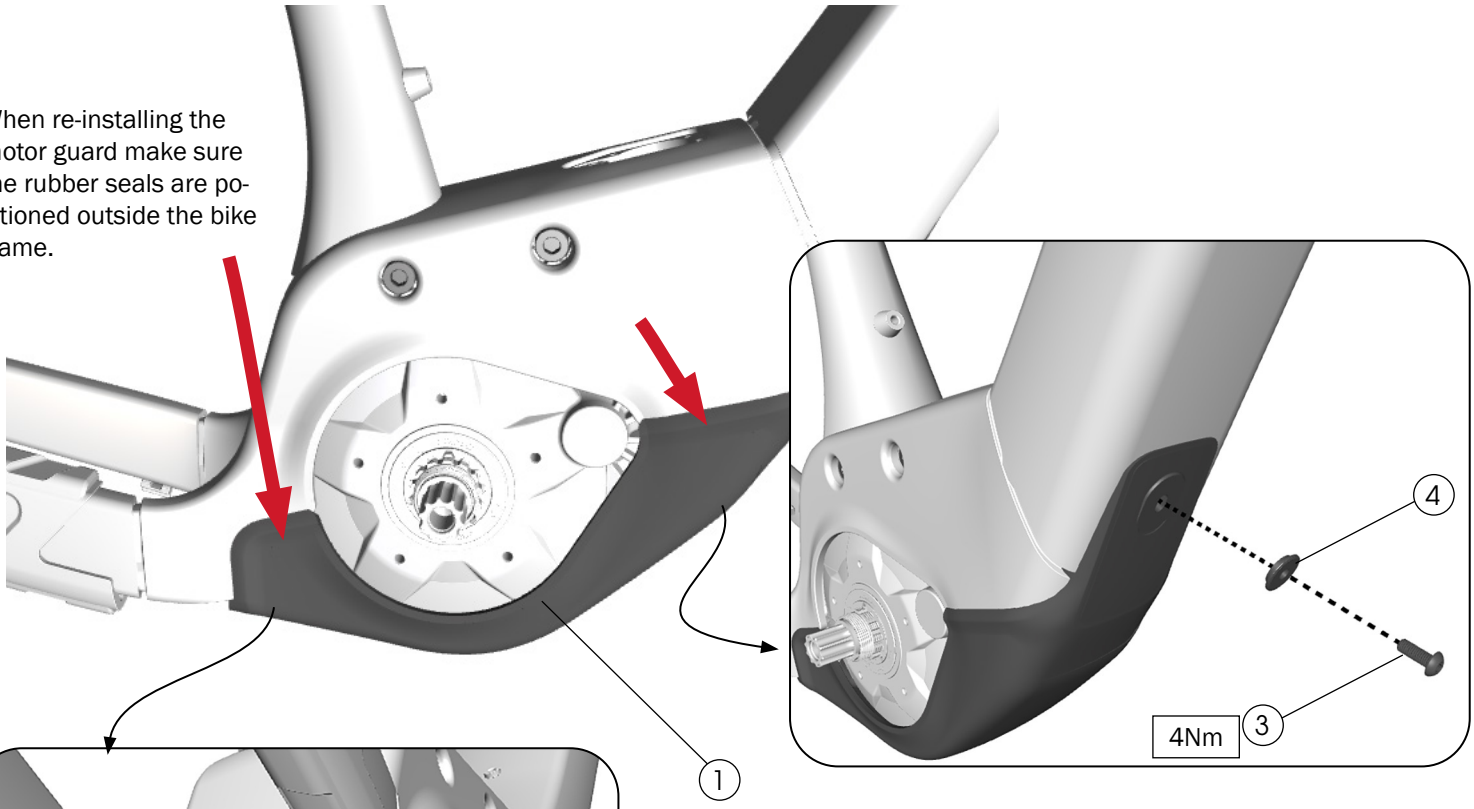


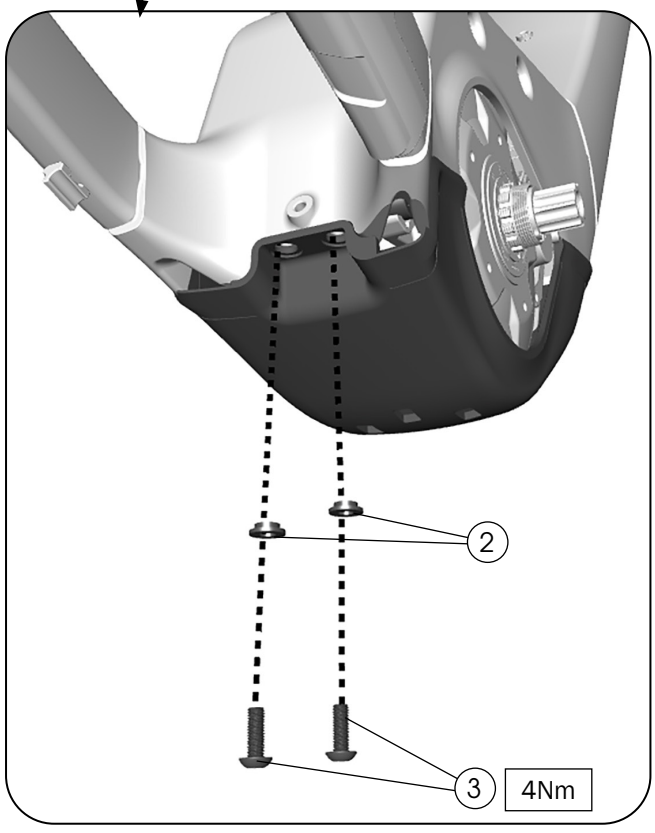


## TIP:

**Install the motor guard**
Install the front spacer and fastener first, then install the rear spacers and fasteners. This will make it easier to align the front fastener with the threads in the battery.




1. Motor guard — *W5306871*
2. Hat-style spacers — *W5272256*
3. Fasteners, M5x14 — *W5314651*
4. Hat-style spacer — *W5315181*

# Motor parts

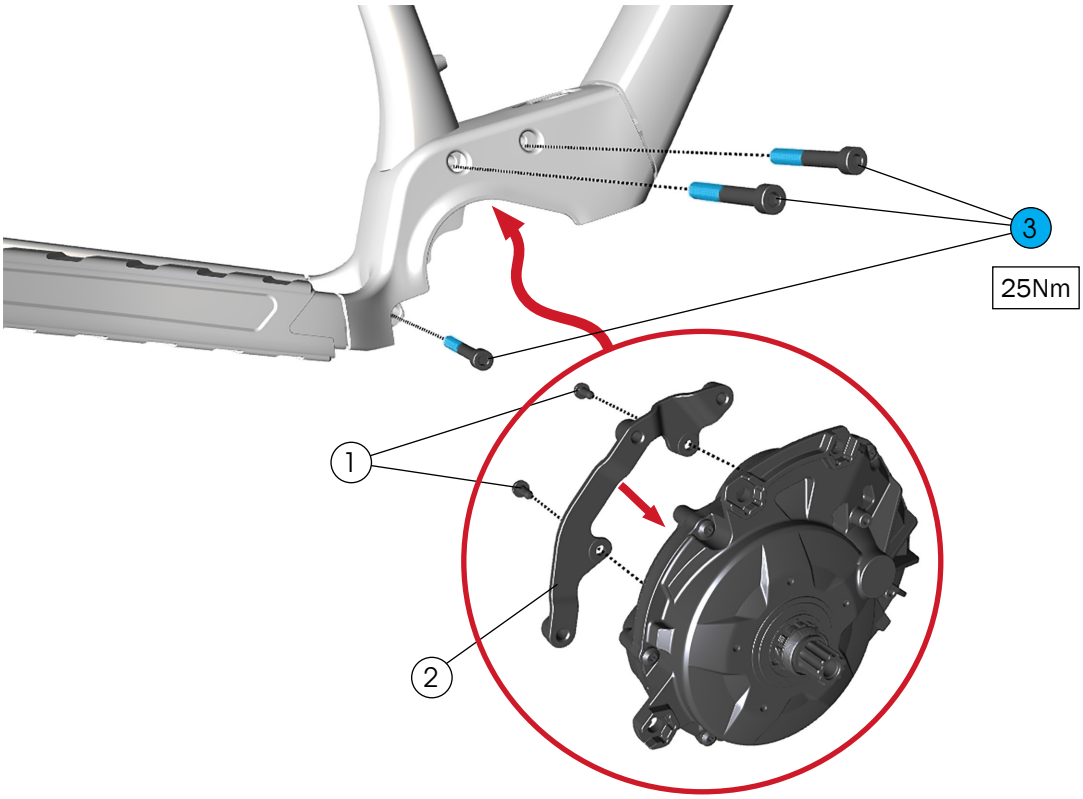


1. Motor mount bracket fasteners — Bosch part number. Refer to Bosch service information.
2. Motor mount bracket — *W561438*
3. Motor fasteners, M8x60 — *5251047*

# Lower the motor

For access to routing and battery connections the motor can be lowered, rather than completely removed.

1. Remove the seatpost dropper lever from the handlebar. This will create slack in the seatpost dropper routing so the routing can be repositioned to allow the motor to be lowered.
2. Remove the motor guard. See *Motor guard on page 10*.
3. Loosen bolts (1) and (3) Remove bolt (2).

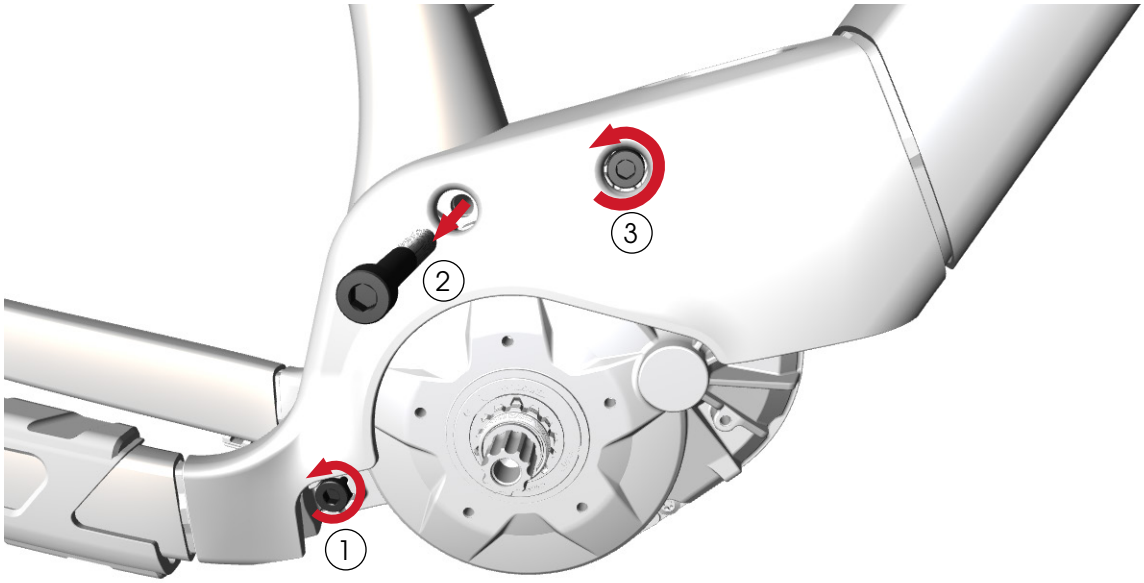


4. Support the motor with one hand and use your other hand to remove bolt (3).
5. Slowly lower the motor. The motor will hang from the frame by the remaining bolt (1).

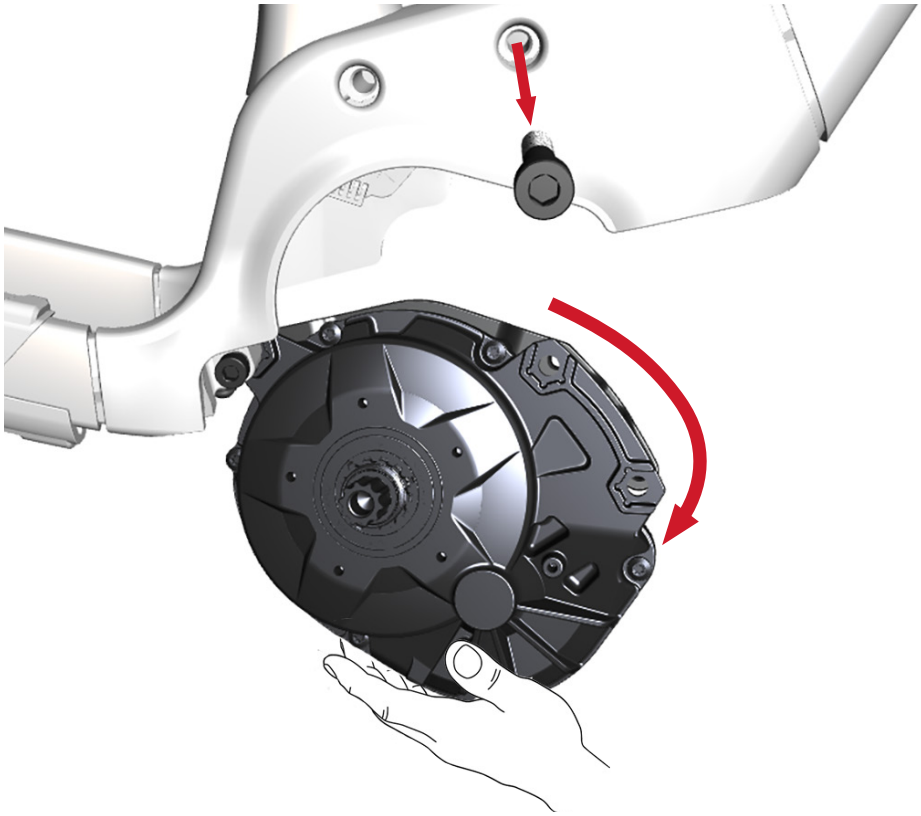

# Battery parts

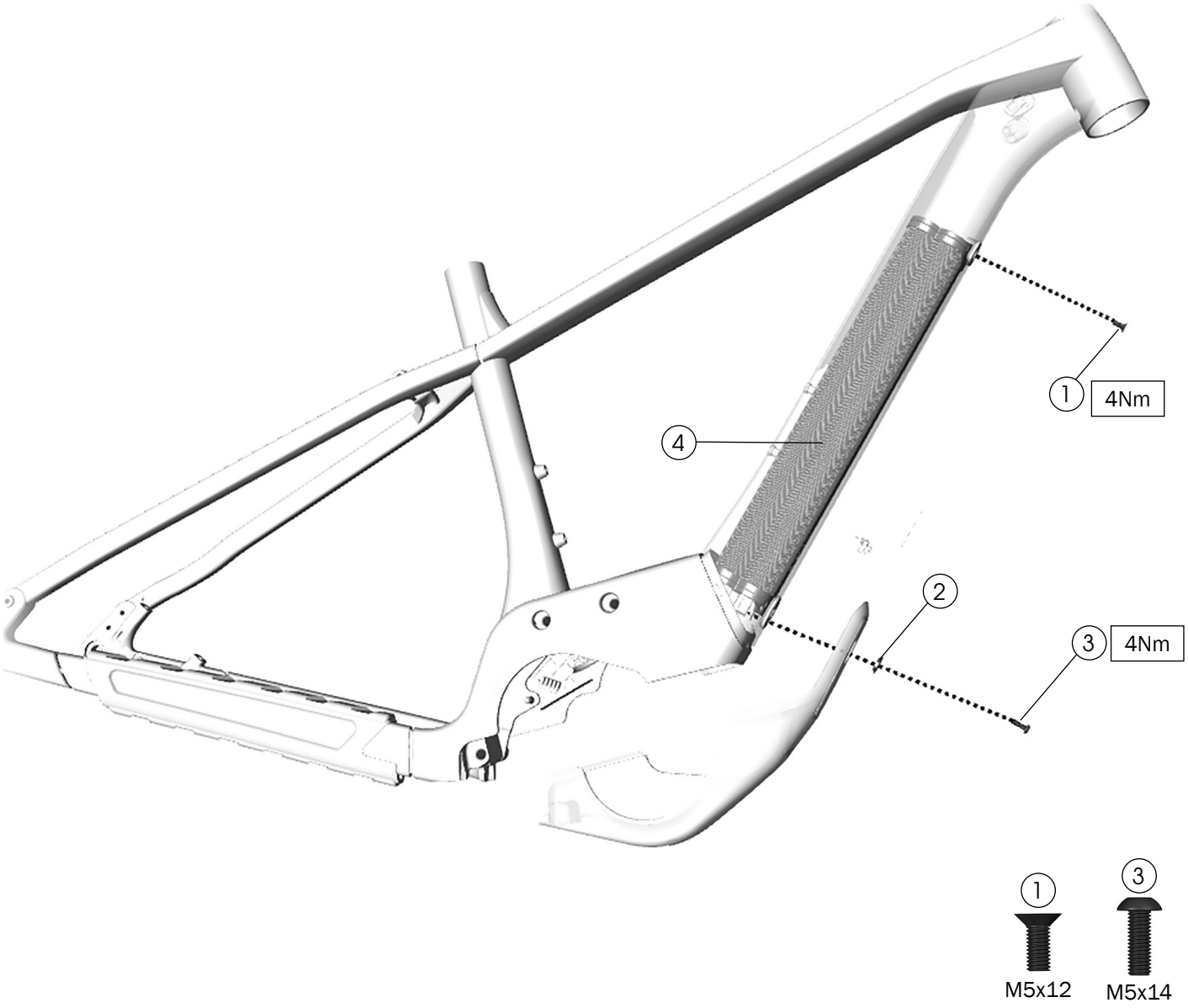


1. Fastener, M5x12 — *W5314650*
2. Washer — *W5315181*
3. Fastener, M5x14 — *W5314651*
4. Battery, horizontal fixed mount — Bosch part numbers:
   US — EB12.100.046
   EU/AUS/NZ — EB12.100.048

# Remove the battery

**NOTICE:** Only professional bike mechanics should remove the battery.

**Tip:** Before beginning this procedure remove the seatpost dropper lever from the handlebar. This will create slack in the hosing that runs under the motor and make it easier to remove the motor.

1

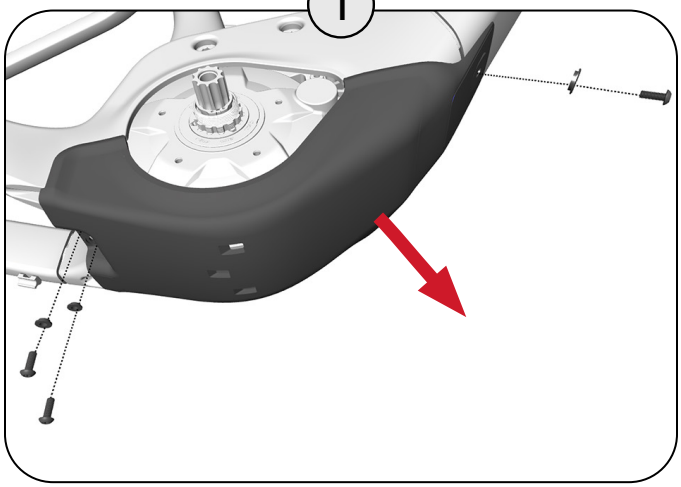

2

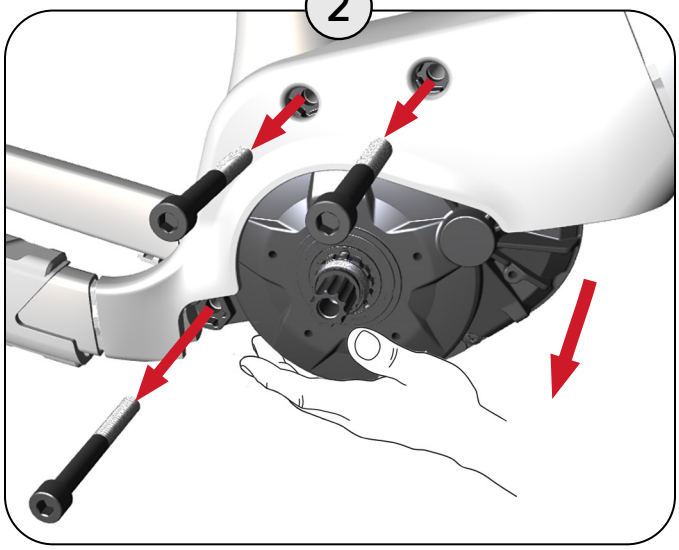

3

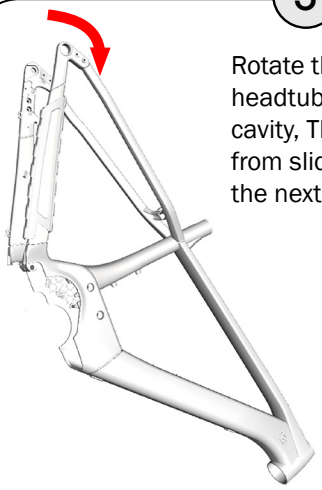

Rotate the bike in the stand so the headtube is lower than the motor cavity, This will prevent the battery from sliding out of the frame in the next step.

4

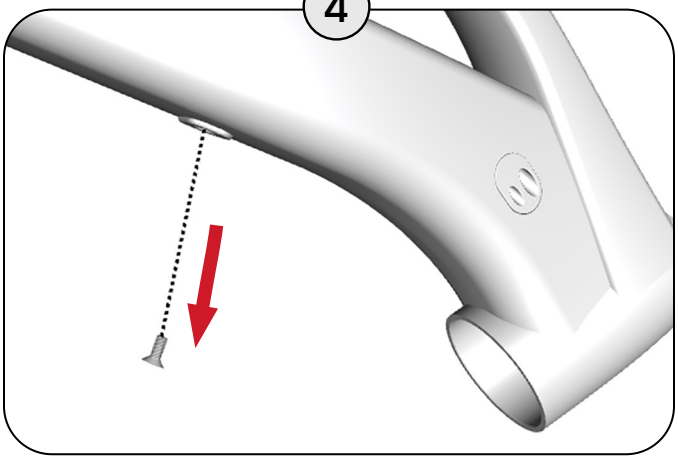

5

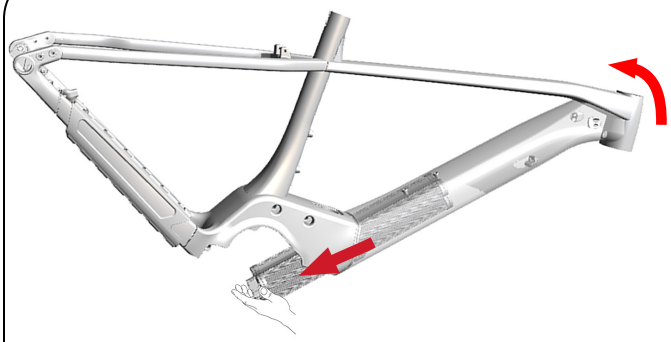

The battery is now loose in the frame. Place one hand below the downtube to catch the battery. Use the other hand to rotate the bike in the stand. The battery will slide out of the downtube.

# Install the battery

1

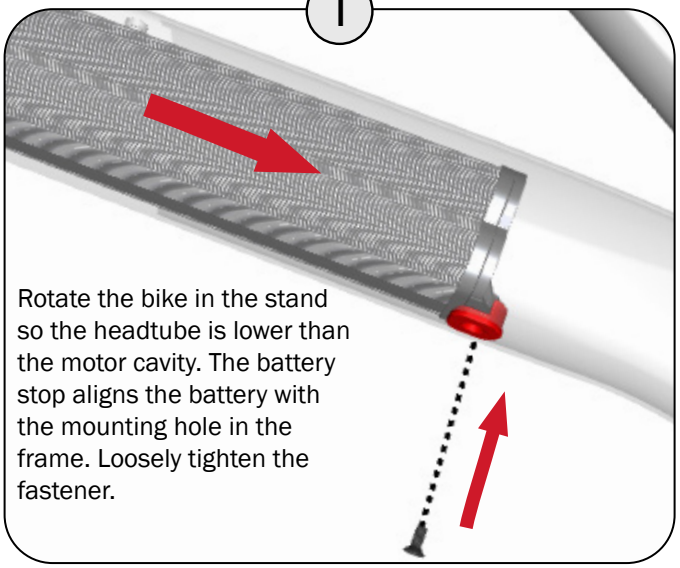

Rotate the bike in the stand so the headtube is lower than the motor cavity. The battery stop aligns the battery with the mounting hole in the frame. Loosely tighten the fastener.

2

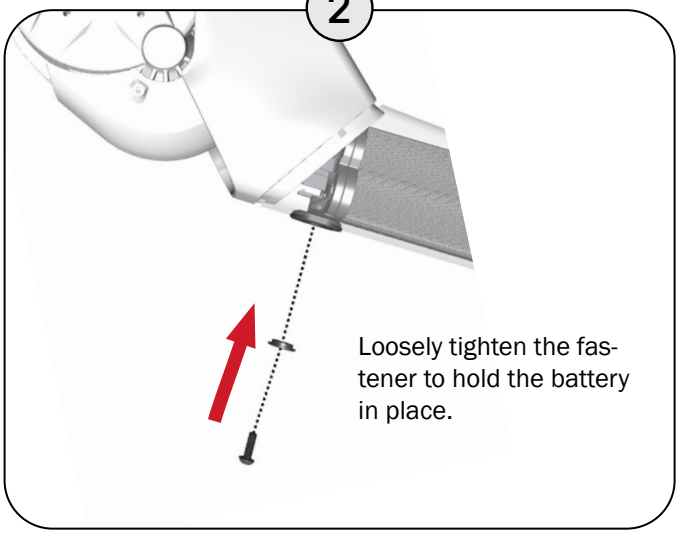

Loosely tighten the fastener to hold the battery in place.

3

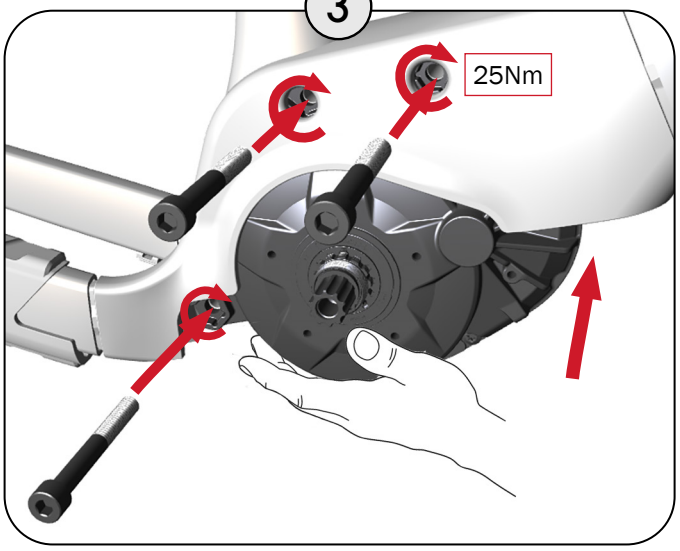


4

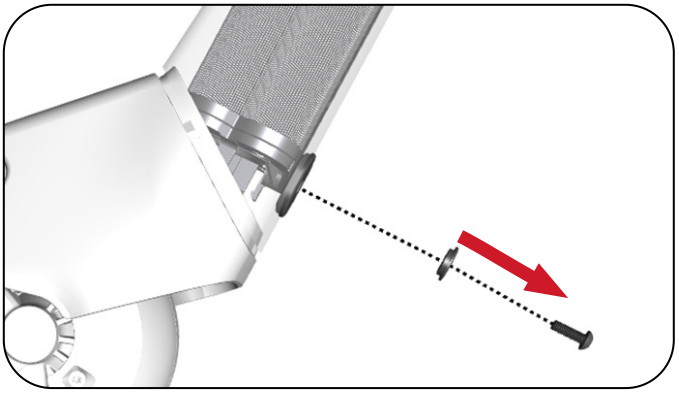

5

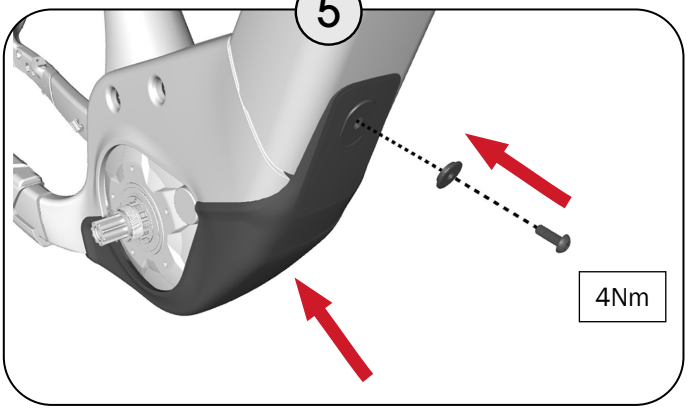


6

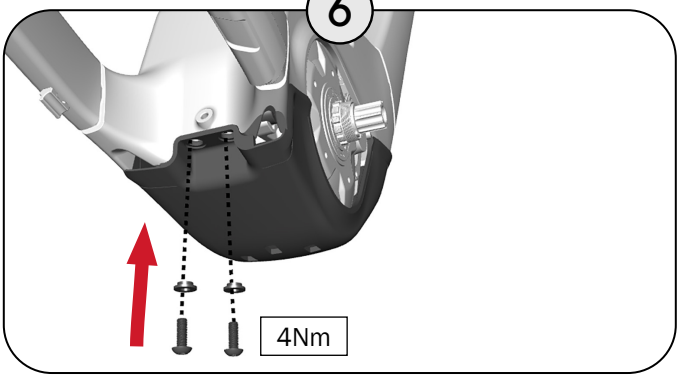


7

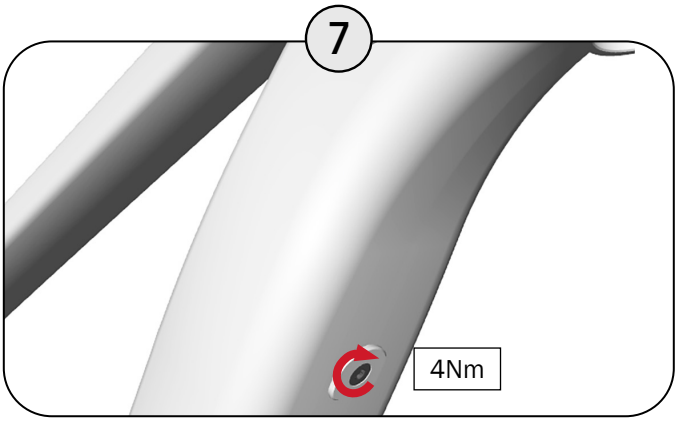

# Front fender

The front fender is sold separately.

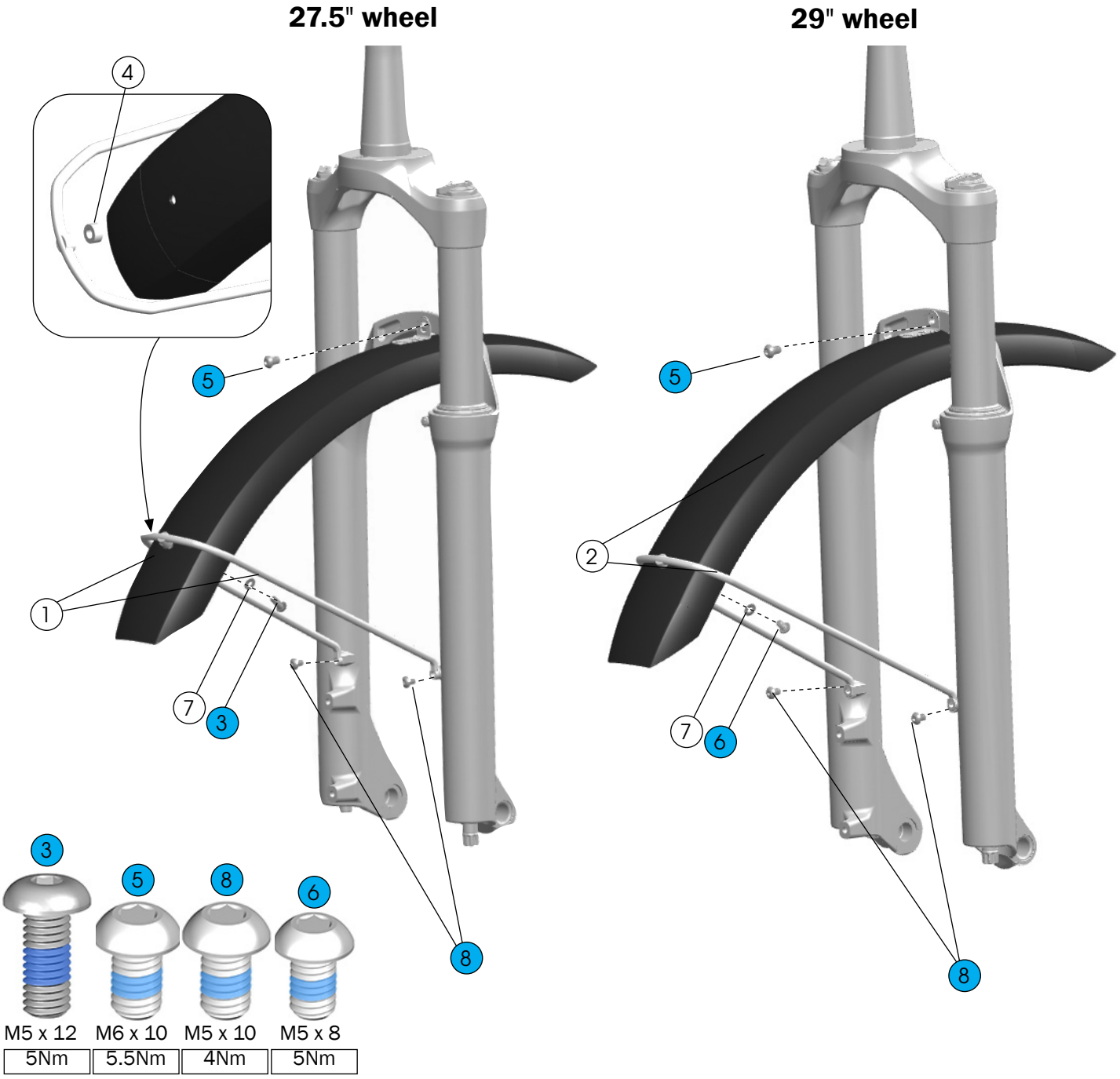


1. Front fender and strut, 27.5" — *601256*
2. Front fender and strut, 29" — *601257*
3. Screw, M5 x 12mm, stainless steel — *W584855*
4. Washer, nylon — *5319894*
5. Bolt, M6 x 10mm, stainless steel (Longer bolt may be required if using a light mounting bracket)
6. Bolt, M5 x 8mm, stainless steel
7. Washer, M5 x 1mm, stainless steel

— *601267*

8. Bolts, M5 x 10mm, stainless steel — *W549305*

*Fender parts for the 29" wheel are compatible with only the originally equipped SR SUNTOUR fork.

# Rear rack — 29" wheel

The rear rack is sold separately. Proper installation requires the fender to be installed with the lower portion of the rack. The upper portion of the rack is detachable.

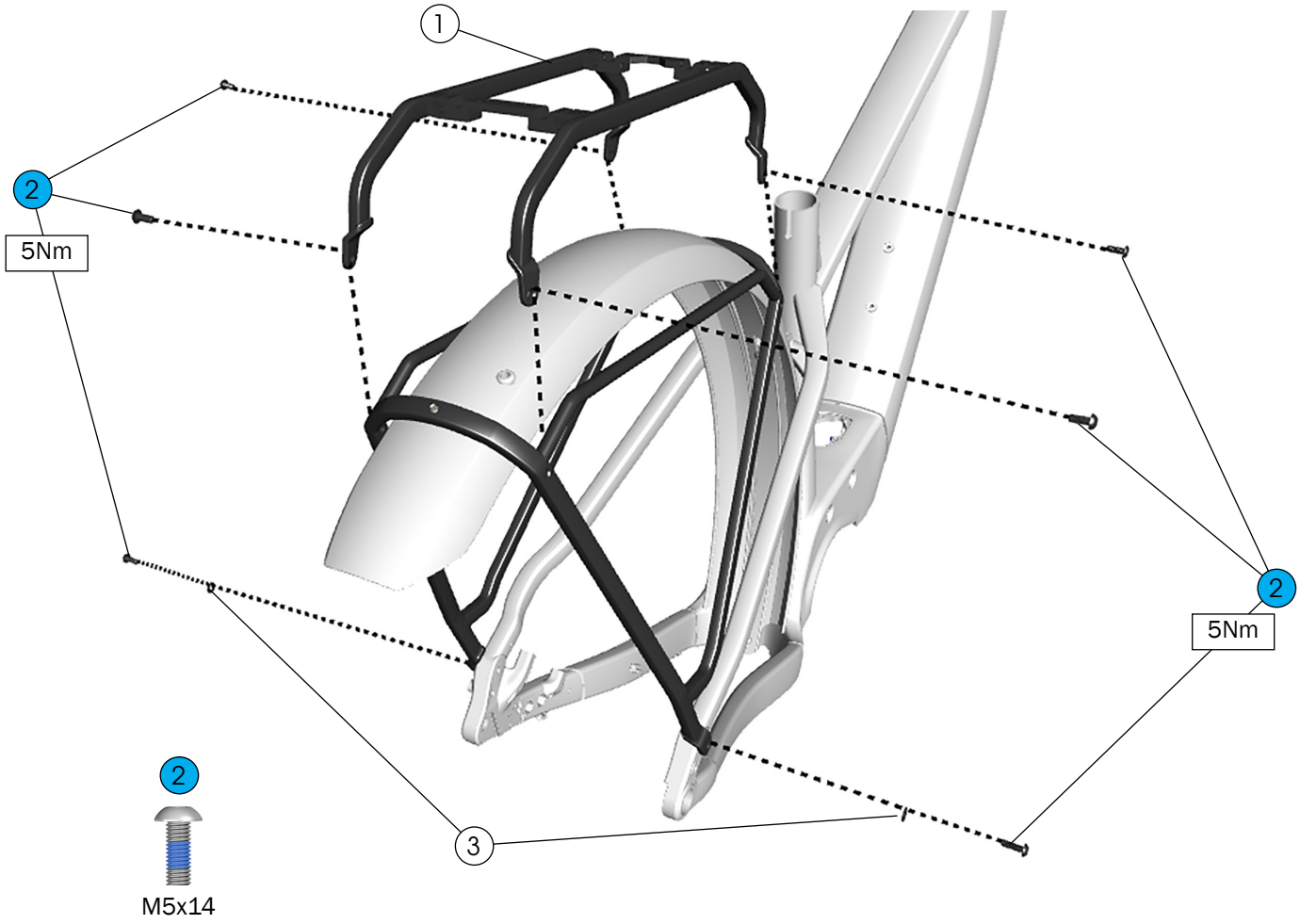





M5x14

1. Rear rack
2. Fasteners, stainless steel, M5 x 14mm
3. Washers, stainless steel, M5 x 1mm

*W5289962*

# Rear fender — 29" wheel

The rear fender is sold separately. Proper installation requires the fender to be installed with the lower portion of the rack. The upper portion of the rack is detachable.

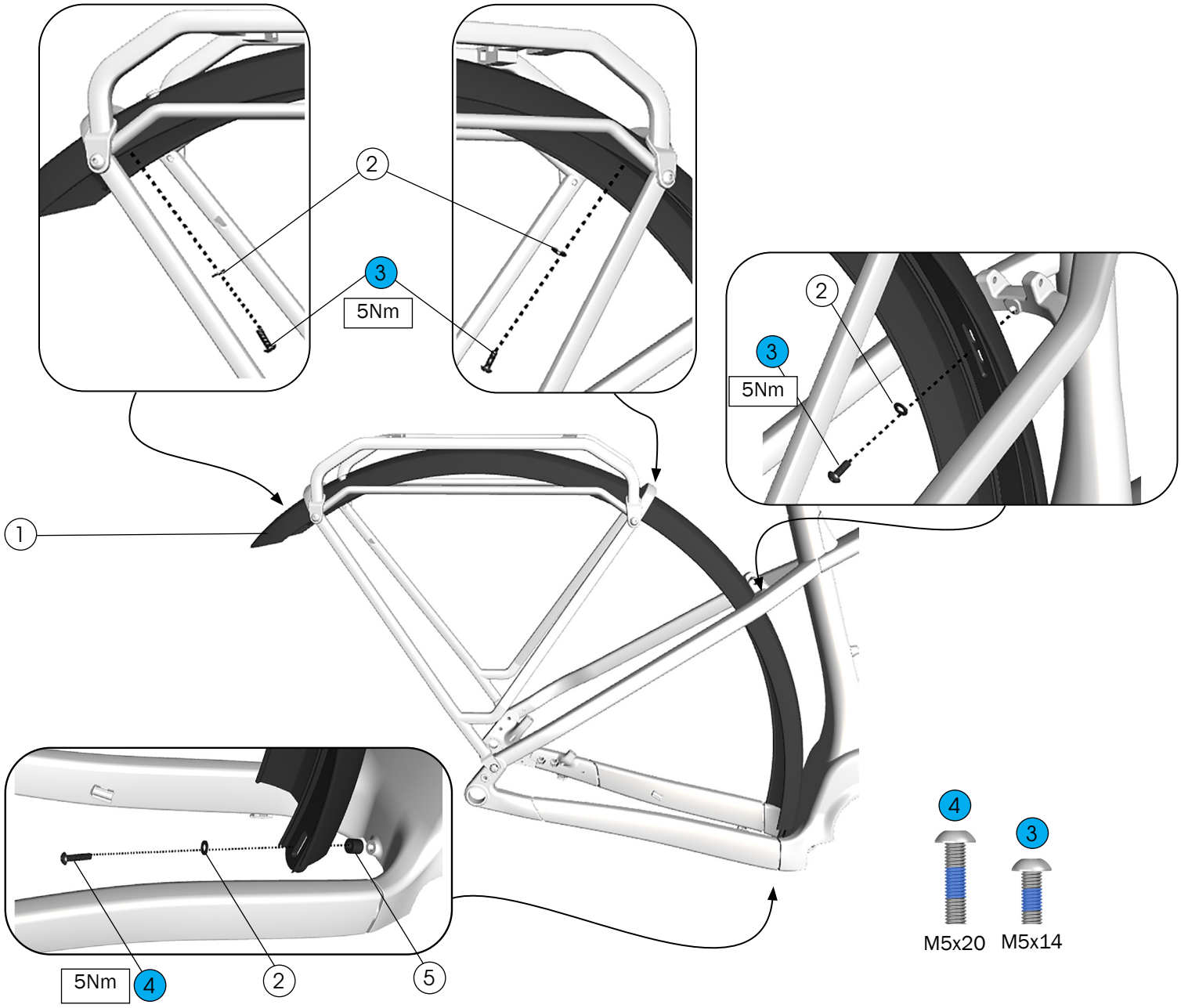


1. Rear fender, 29" wheel — *W5309614*
2. Washers, stainless steel, M5 x 1mm
3. Fasteners, stainless steel, M5 x 14mm
4. Fastener, stainless steel, M5 x 20mm
5. Spacer, aluminum, 7.5mm

— *5315939*

# Rear rack — 27.5" wheel

The rear rack is sold separately. Proper installation requires the fender to be installed with the lower portion of the rack. The upper portion of the rack is detachable.

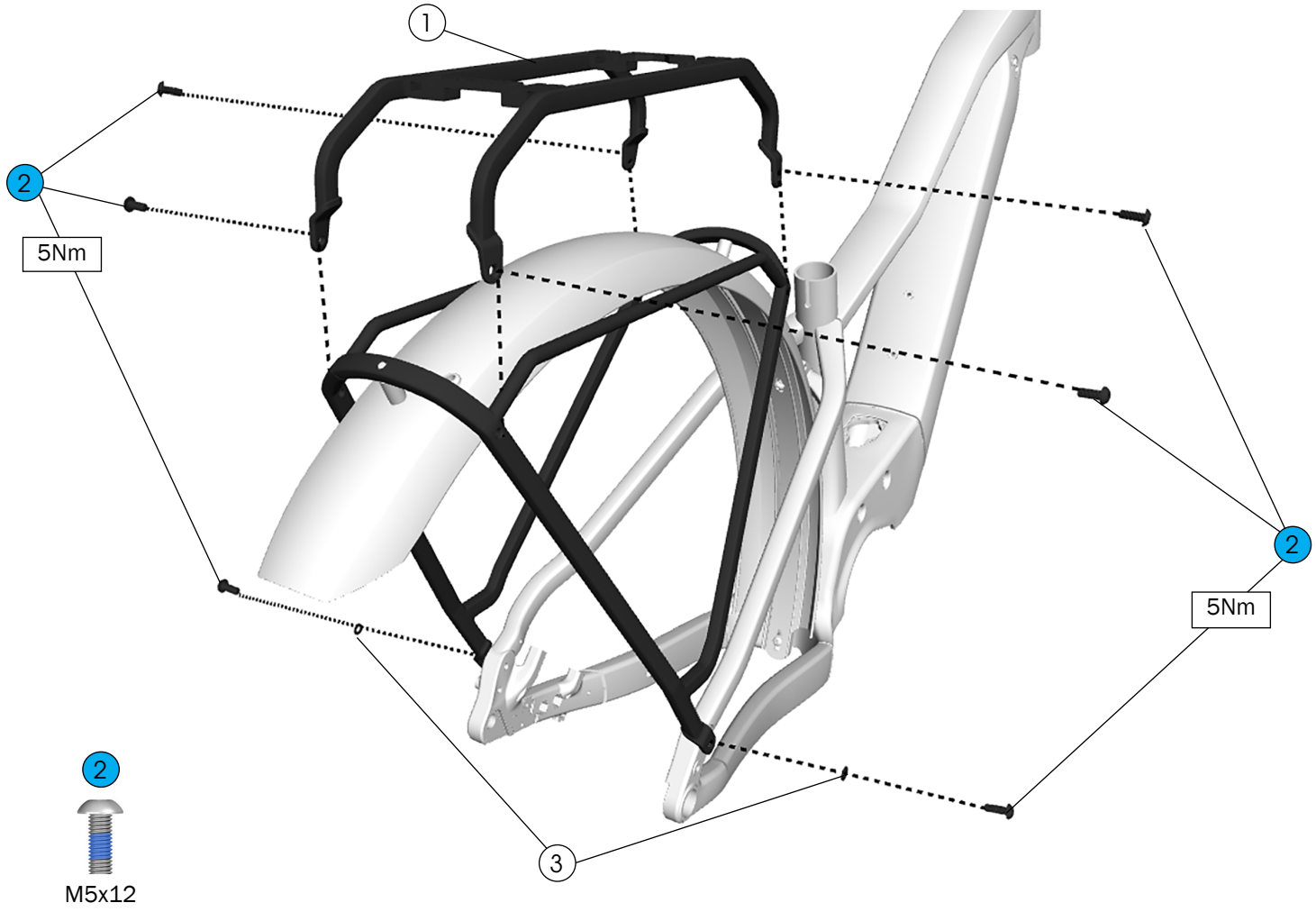





M5x12

1. Rear rack
2. Fasteners, stainless steel , M5 x 14mm
3. Washers, stainless steel, M5 x 1mm

*W5289962*

# Rear fender — 27.5" wheel

The rear fender is sold separately. Proper installation requires the fender to be installed with the lower portion of the rack. The upper portion of the rack is detachable.

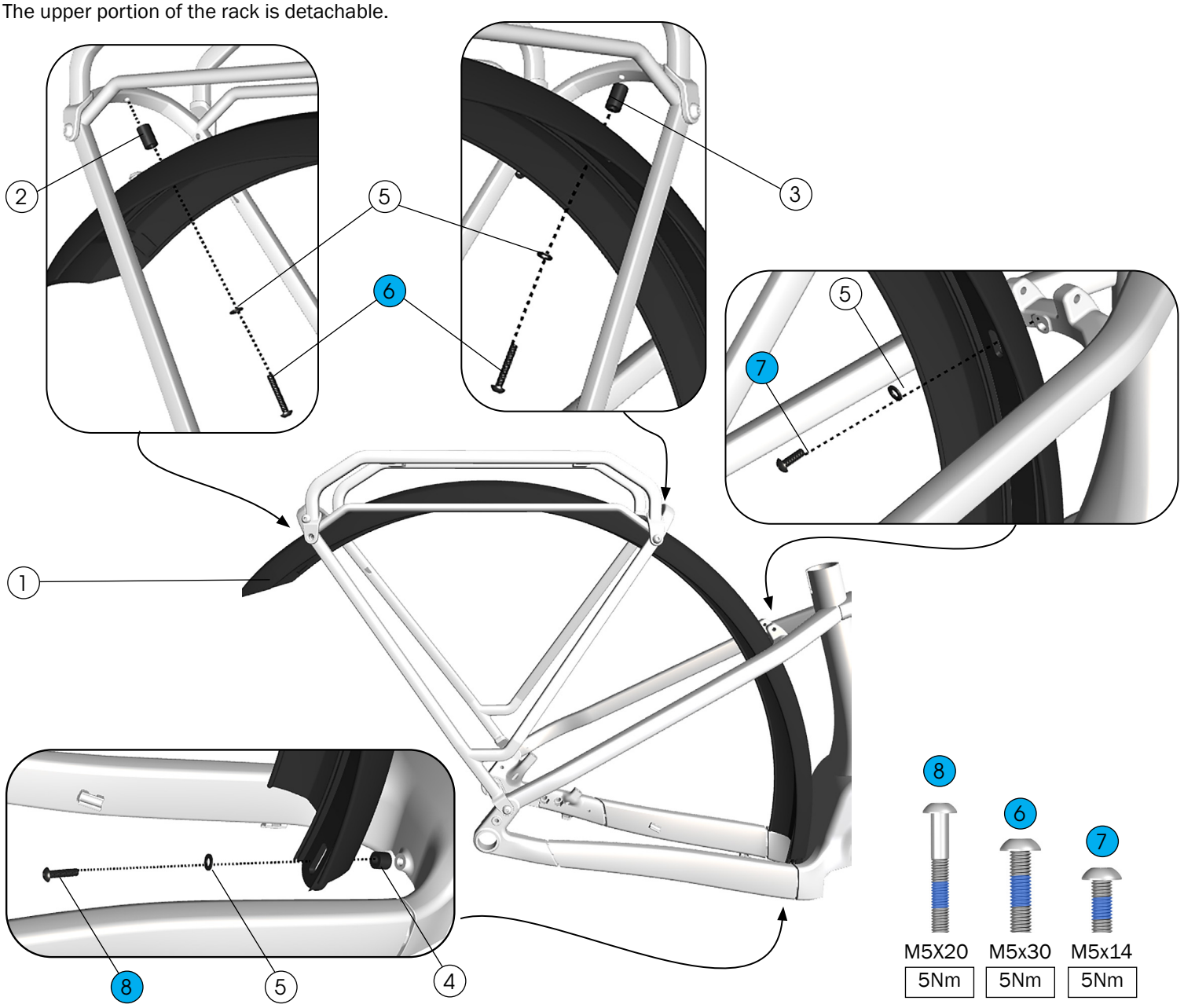


1. Rear fender, 27.5" wheel — *W5309612*

— *5315939*

2. Spacer, aluminum, 24.5mm
3. Spacer, aluminum, 16mm
4. Spacer, aluminum, 13.8mm
5. Washers, stainless steel, M5 x 1mm
6. Fasteners, stainless steel, M5 x 30mm
7. Fastener, steel, M5 x 14mm
8. Fastener, stainless steel, M5 X 20mm

# Rear light routing – thru the fender

The rear light is sold separately.

Refer to the Bosch service manual for instructions on connecting a rear light to the motor,.



*W1047565*

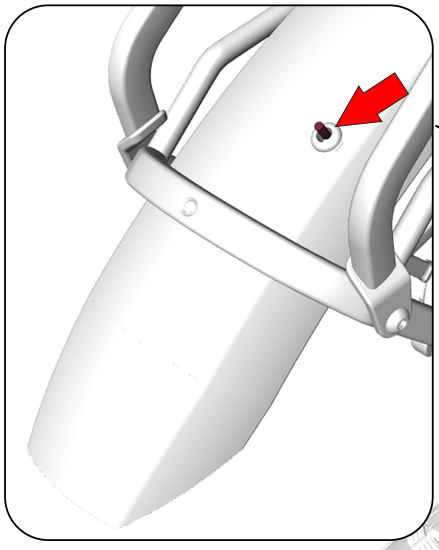

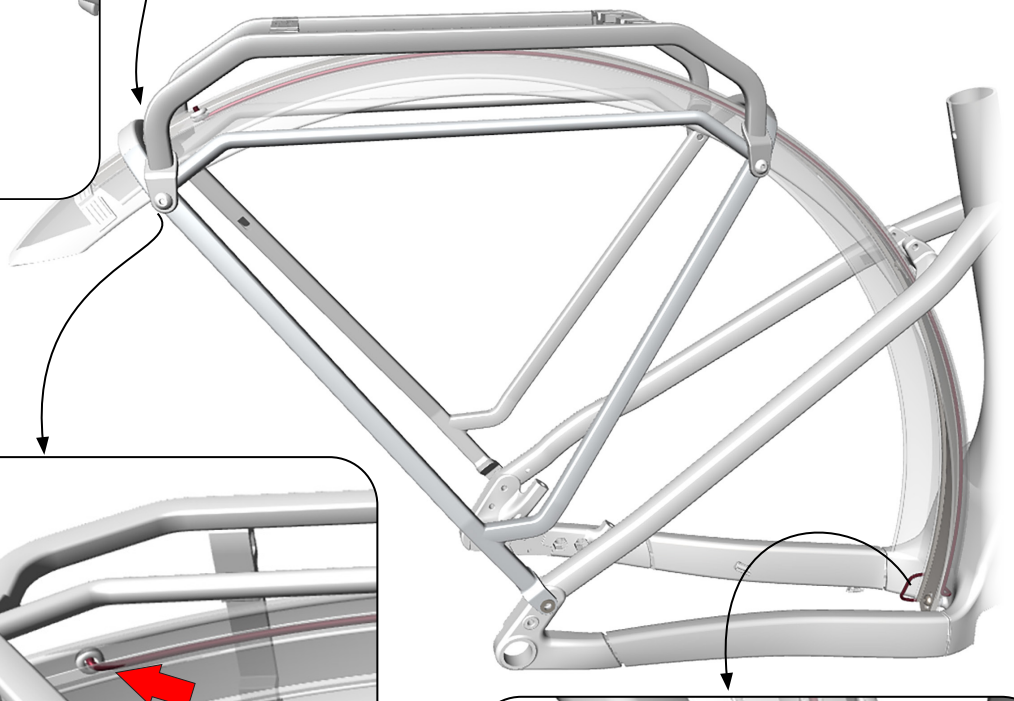

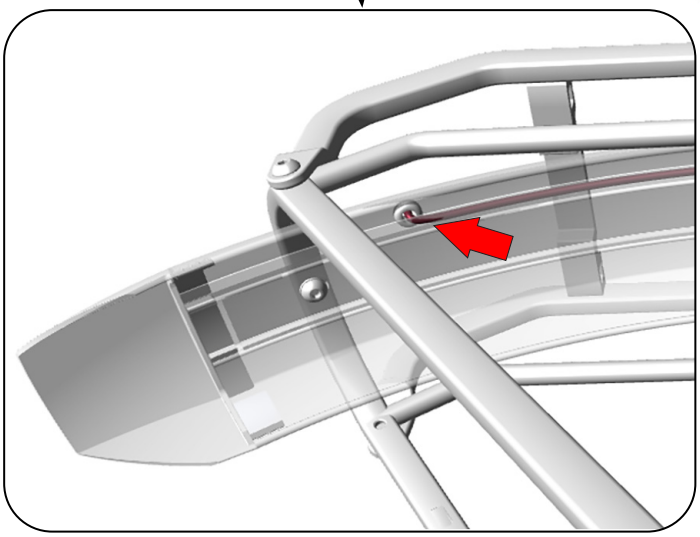

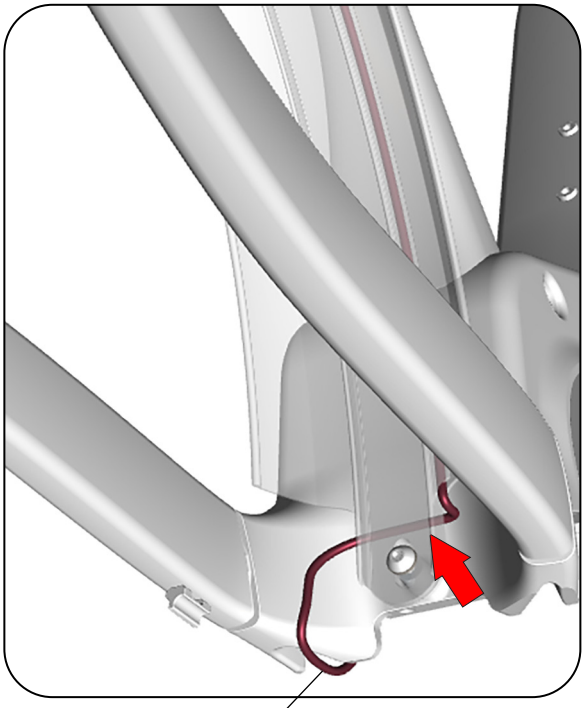

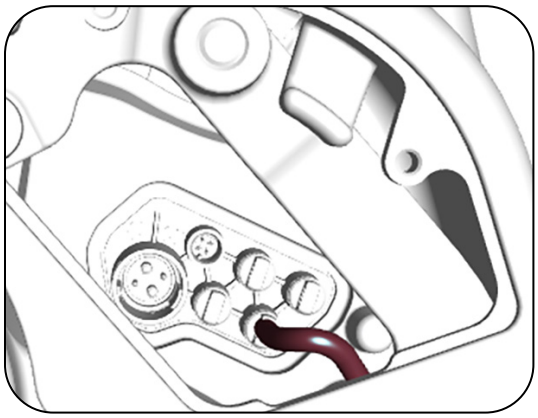

Light cable — Bosch part number EB12.120.00

# Rear light routing — thru the chainstay

The rear light is sold separately.

Refer to the Bosch service manual for instructions on connecting a rear light to the motor.

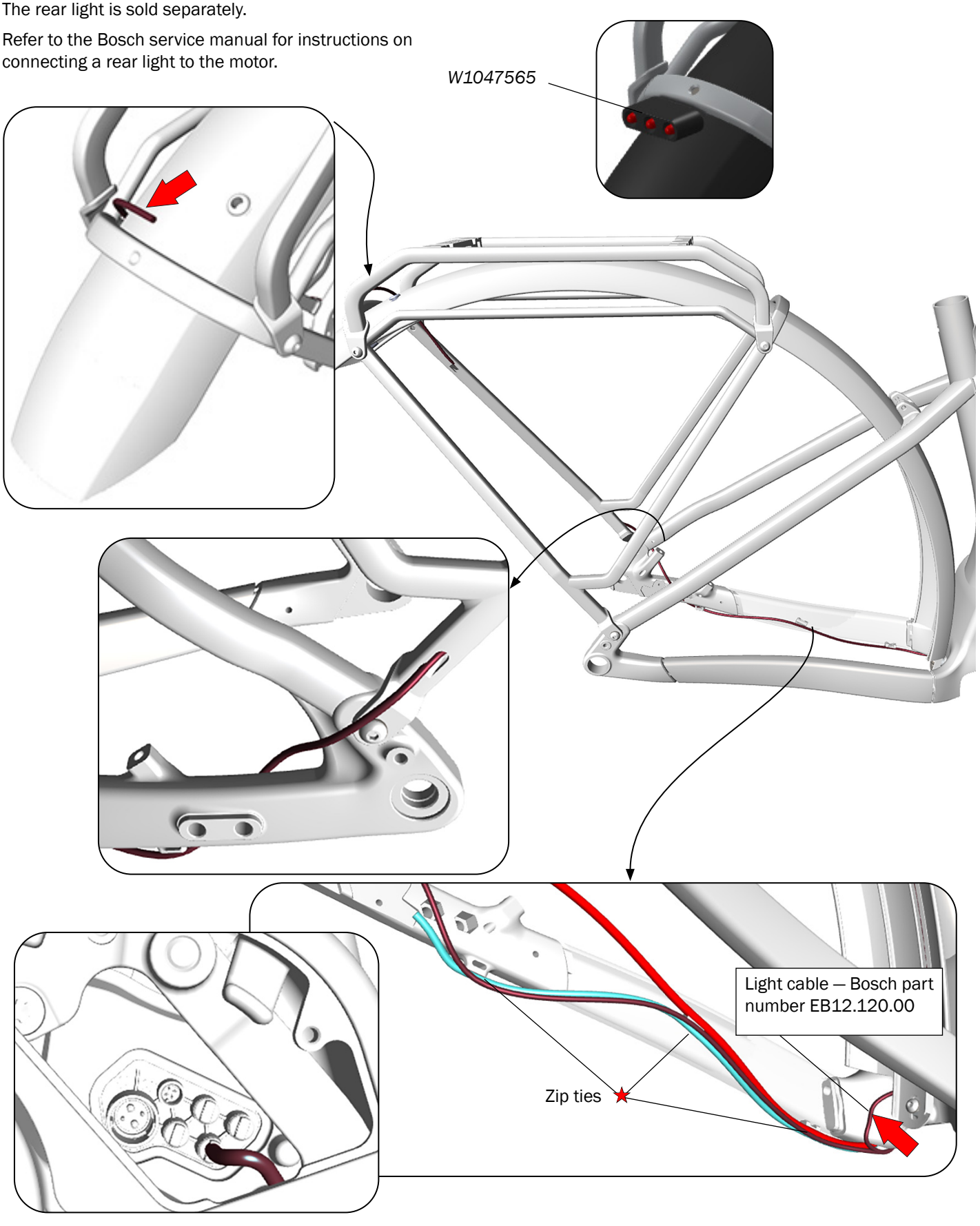

# Front light routing

The Marlin+ does not feature dedicated routing for a battery-connected front light. However, a rider could choose to remove the dropper post and instead install an motor-connected front light.

Refer to the Bosch service manual for voltage requirements and instructions for connecting a front light to the motor.

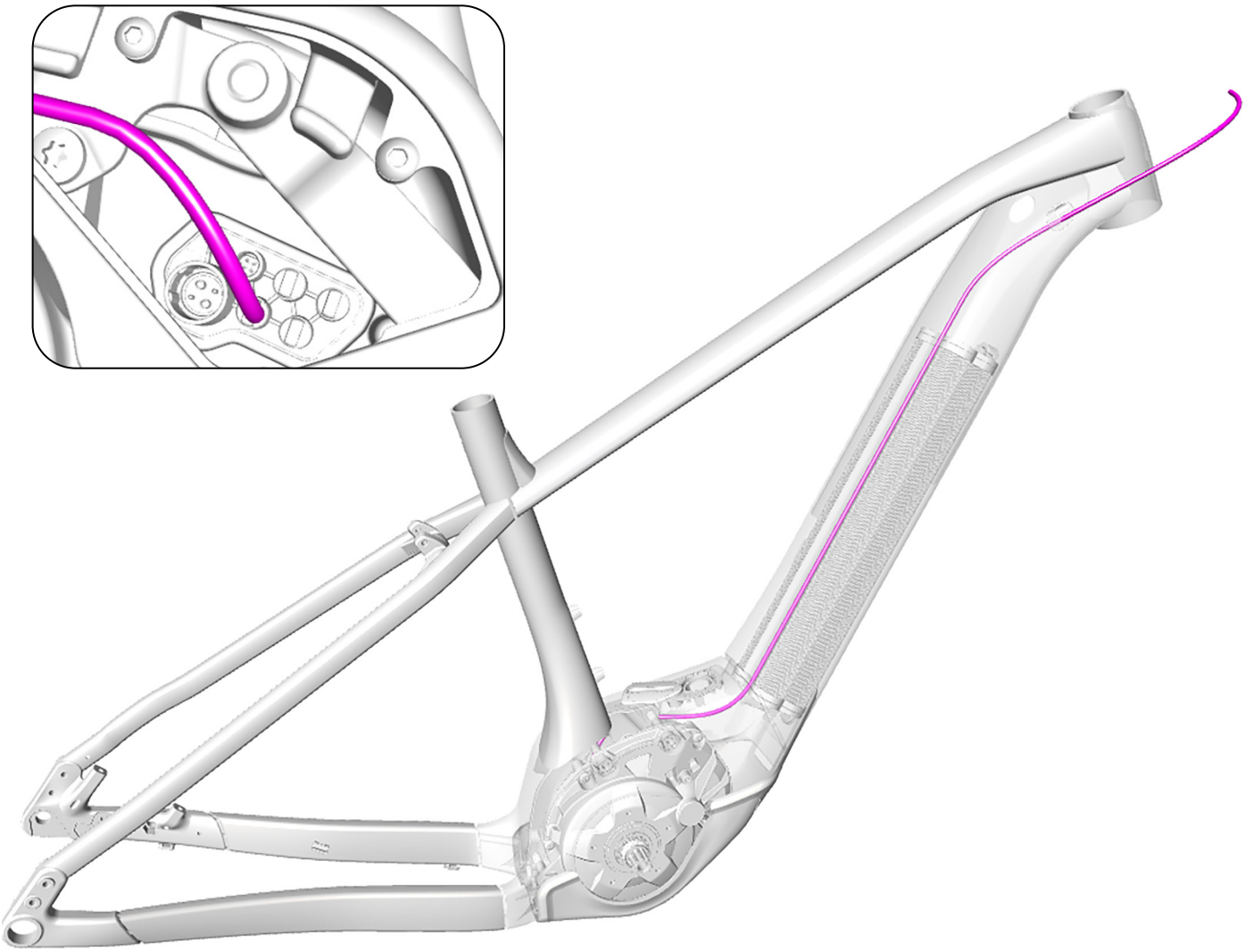

# Specifications

## Chainline (1x only)

52mm

## Chainring (1x only)

| Minimum | Maximum |
|---|---|
| 32T | 36T |

Oval rings of any size are not recommended as they will affect motor performance and the ring will damage the chainstay.

## Rear brake mount

| Minimum | Maximum |
|---|---|
| 180mm, direct mount | Adaptable to 203mm |

## OLD

**Rear Hub:** 148mm

## Maximum tire size

**Note:** Marlin+ is not designed for mixed wheel sizes.

**XS, S:** 27.5" x 2.6" (2.4" with fenders)

**M, L, XL:** 29" x 2.6" (2.4" with fenders)

**NOTICE:** Measurements of actual tires may vary. Always verify there is sufficient clearance between the tire and the frame. Improper tire size could damage the bicycle frame. Trek recommends 6mm clearance above and on the sides of the tire.

## Seatpost

**WARNING**

Always follow the seatpost manufacturer's minimum insertion recommendation. Failure to follow the recommendation could cause damage to the seatpost and result in injury to the rider.

**Minimum insertion:** Refer to seatpost manufacturer

**Maximum insertion**

- **Extra Small:** 210mm
- **Small:** 240mm
- **Medium:** 290mm
- **Large:** 320mm
- **Extra Large:** 370mm

**Seat tube inside diameter:** 31.6mm

**Seat tube post-clamp outer diameter:** 36.4 mm

## Fork

**WARNING**

Exceeding the recommended maximum fork length could damage the bicycle and result in injury to the rider.

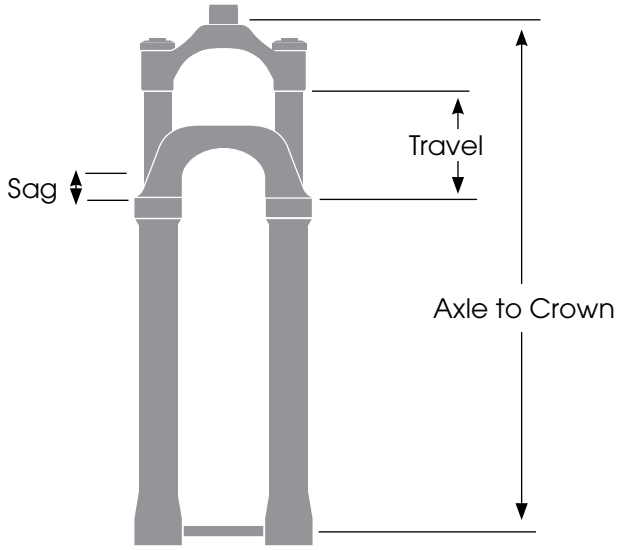


| Frame/Size | Axle to Crown (mm) | | Travel (mm) |
|---|---|---|---|
| XS | Recommended | 492 | 100 |
| | Maximum | 504 | 110 |
| S | Recommended | 512 | 120 |
| | Maximum | 524 | 130 |
| M, L, XL | Recommended | 531 | 120 |
| | Maximum | 543 | 130 |

**Recommended sag:** Refer to the suspension calculator at *Trekbikes.com/suspension-calculator*.

## Kickstand mount

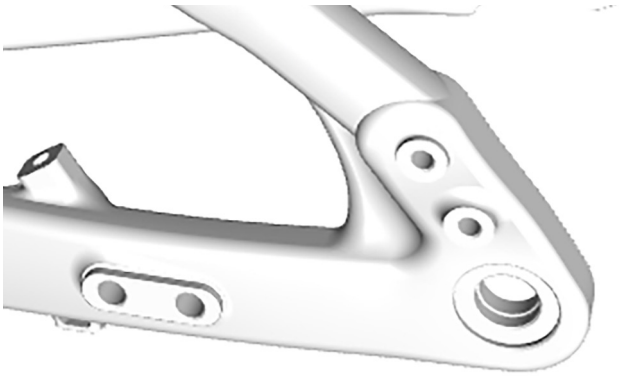

Compatible kickstand — *W330289*