TREK



BOSCH

2027 MARLIN+

SERVICE MANUAL

Contents

Wiring diagram
Routing overview
Brake, shift, and dropper post routing

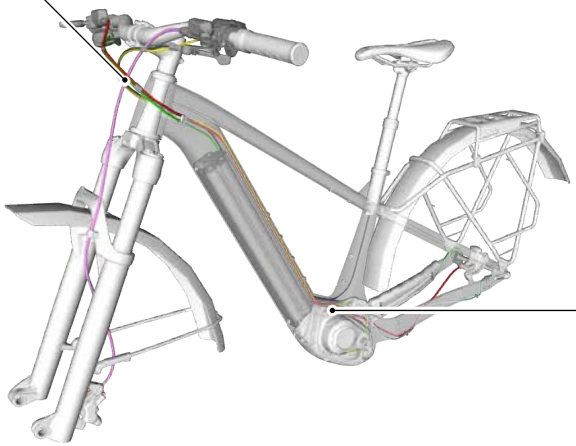

Remote
Speed sensor
Charge socket and battery cables
Front light
Rear light
Range extender



Headset and stem
Fenders
Rear derailleur hanger and axle
Frame parts
Rear rack
Specifications
Drive unit
Battery and docks
Battery instructions

Copyright 2026 Trek Bicycle Corporation All Rights Reserved

About this manual

Scope

This manual contains parts diagrams, specifications (such as grease and torque values), instructions, part numbers, and helpful tips. It does not contain instructions for all components (such as brake calipers). Refer to the original manufacturer for more information.

Replacement parts

Trek recommends using only Trek OEM (original manufacturer) replacement parts.

Additional info

- Trek Bicycle Owner's Manual: trekbikes.com/manuals
- Bosch Quick Start Guide: trekbikes.com/manuals
- Bosch Comprehensive Owner's Manual: trekbikes.com/manuals
- Bosch Manuals: bosch-ebike.com

E-system components are intended to be serviced by bike dealers.

Consumers: Contact your local bike shop for assistance.

Dealers: Use this link to set up the Bosch service tool: e-bike service tool.

Inspect the bike

Please inspect the bicycle carefully after removal from the box and all packaging:

- Inspect all surfaces of the bicycle for damage, pay special attention to the fork legs and the seat stays (both inside and outside surfaces).
- If packaging damage is located near the front of the bicycle, remove the fork from the frame and inspect the steerer tube for damage.

3D interactive graphics

Click the icon in this manual to view interactive models.

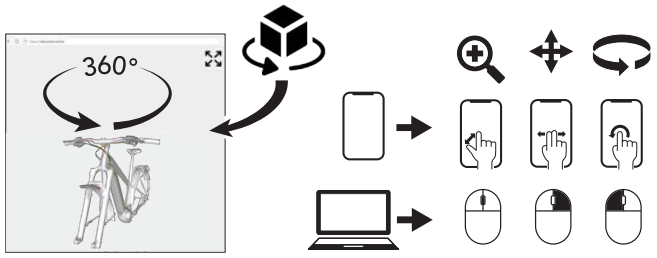

Legend


Cable (zip) tie

Nm Torque value


Apply appropriate threadlocker


Apply Bontrager grease

Safety

WARNING

Properly tighten hardware

Always tighten hardware to the specified torque. Over-tightening hardware could deform or break the hardware or components. Under-tightening or over-tightening hardware could cause hardware or components to become loose. Either situation could damage the bicycle and result in injury to the rider.

WARNING

Reapply threadlocker

All reused-fasteners with pre-applied threadlocker must be cleaned with isopropyl alcohol and have new threadlocker applied before re-assembly. If threadlocker is not applied, the fasteners may loosen which could damage the bicycle and result in injury to the rider.

Wiring diagram

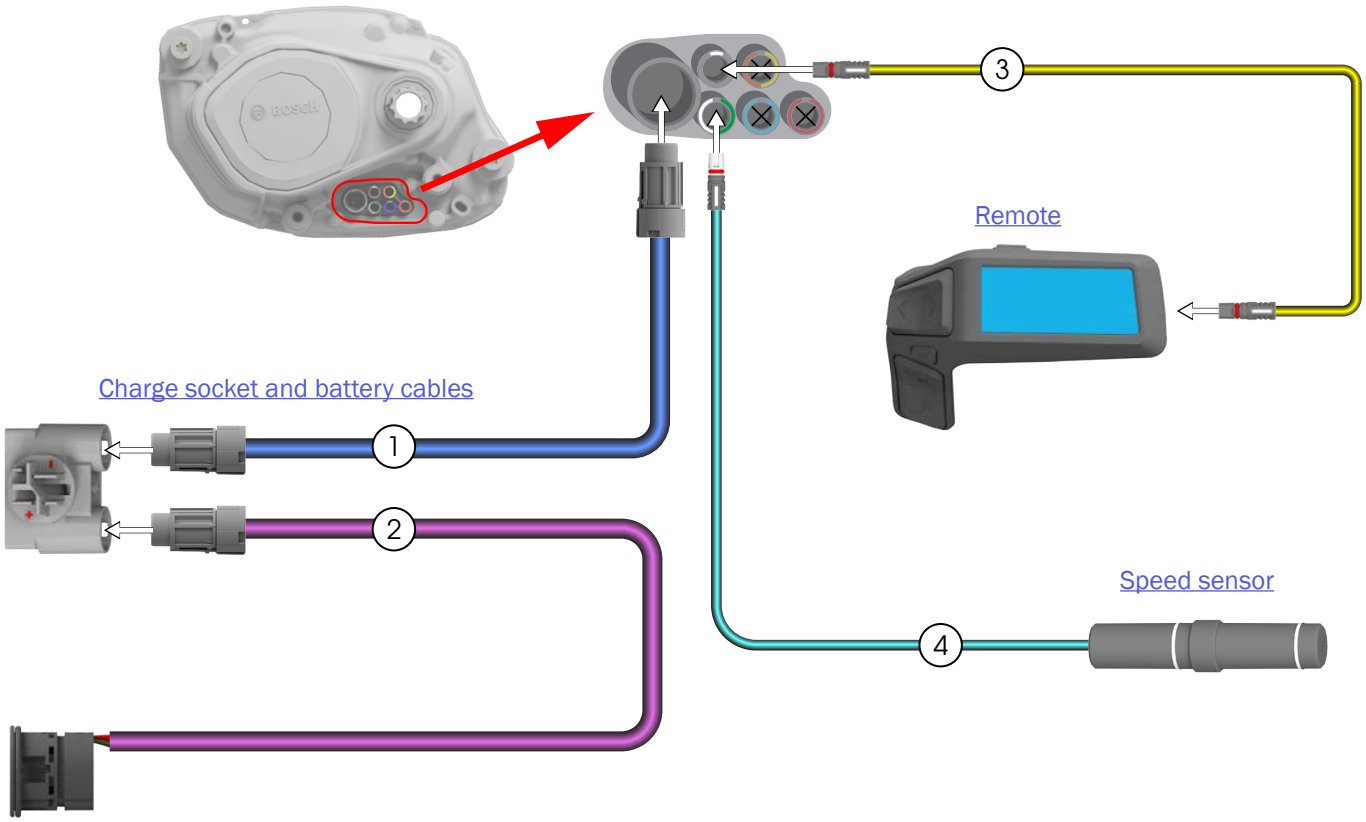

1. Battery cable (400 mm) — **EB12.120.00T*
2. Charge socket/cable (350 mm) — **EB12.120.03W*
3. HMI/remote cable (1,500 mm) — **EB12.120.005*
4. Speed sensor/cable (615 mm) — **EB11.200.011*

**Bosch part number*

Routing overview

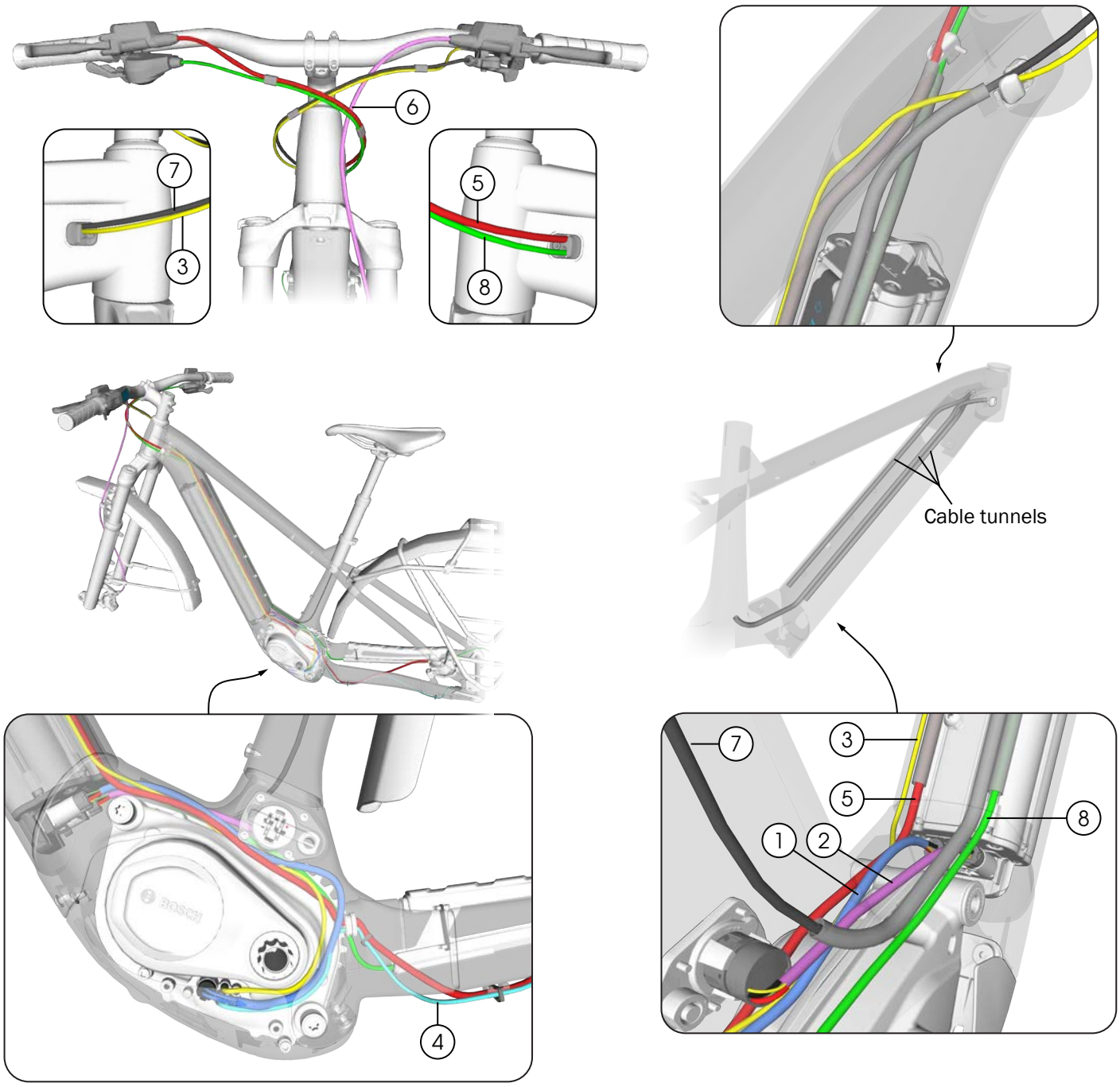

1. Battery cable (400 mm) — **EB12.120.00T*
2. Charge socket/cable (350 mm) — **EB12.120.03W*
3. HMI/remote cable (1,500 mm) — **EB12.120.005*
4. Speed sensor/cable (615 mm) — **EB11.200.011*
5. Rear brake hose
6. Front brake hose
7. Dropper post cable
8. Rear derailleur cable

**Bosch part number*

Brake, shift, and dropper post routing

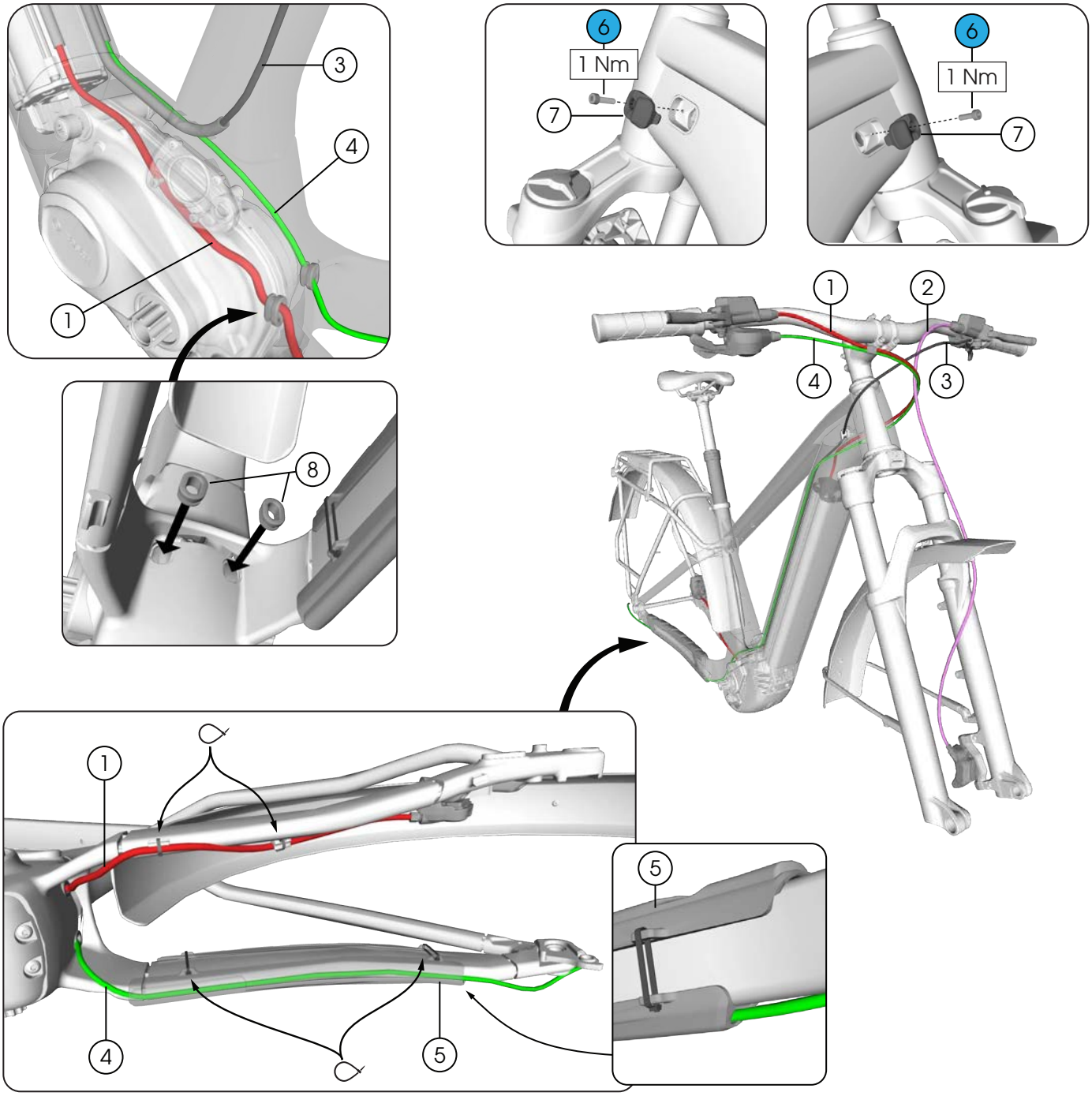

1. Rear brake hose
2. Front brake hose
3. Dropper post cable
4. Rear derailleur cable
5. Chainstay guard — *5252847*
6. Fasteners (M3 x 10 mm) — 2.5
7. Control Freak 2.0 cable guides — *W5317471*
8. Cable grommets — *W5255861*

Remote

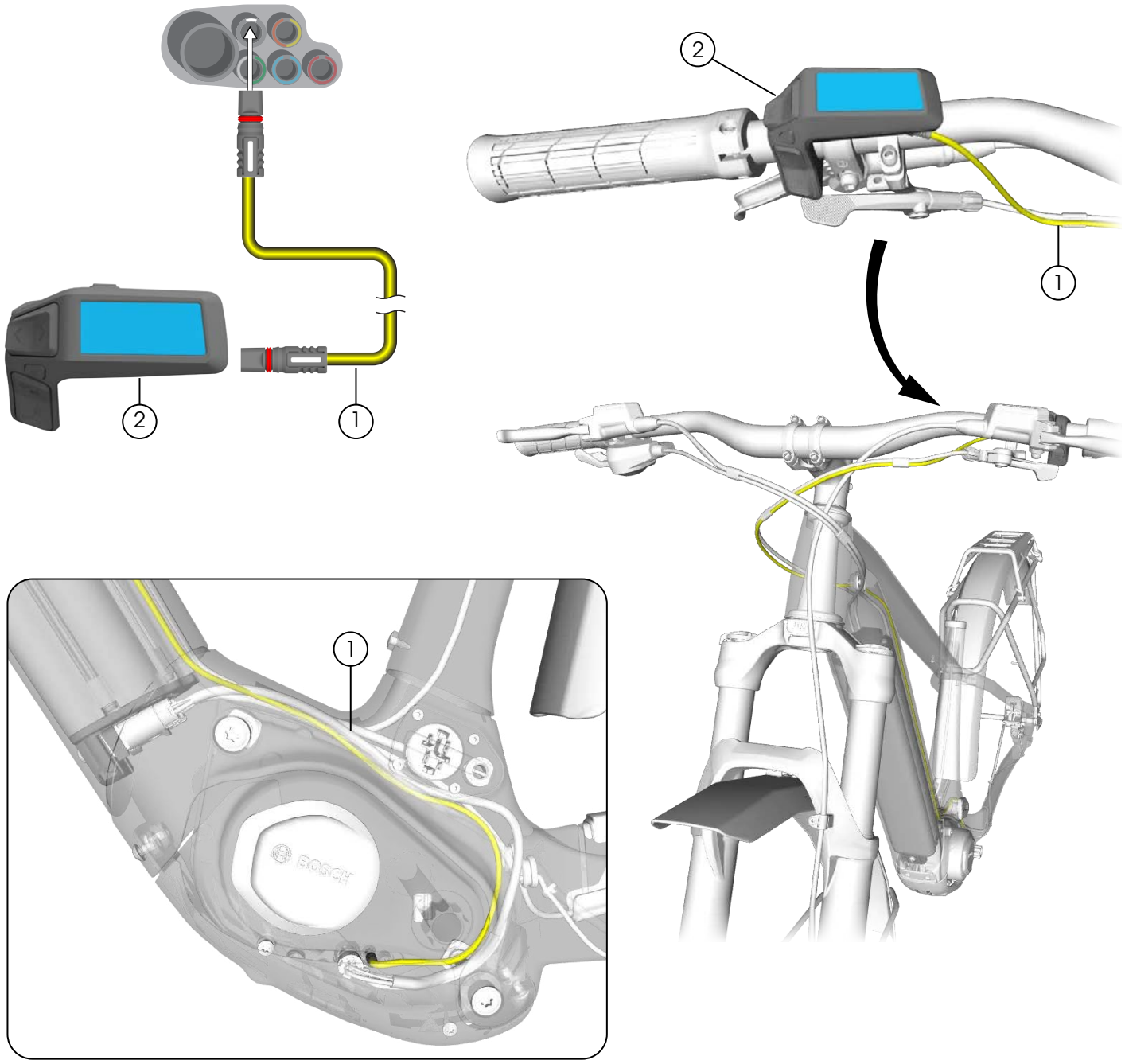

1 Purion 200 remote — **EB13.200.03V*

2 HMI/remote cable (1,500 mm) — **EB12.120.005*

**Bosch part number*

Speed sensor

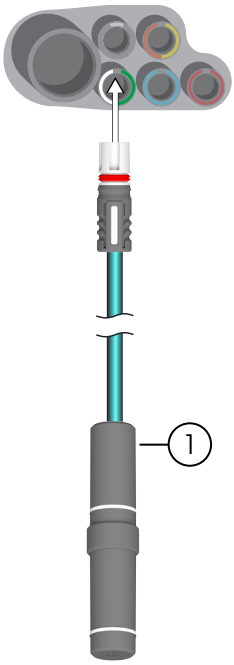

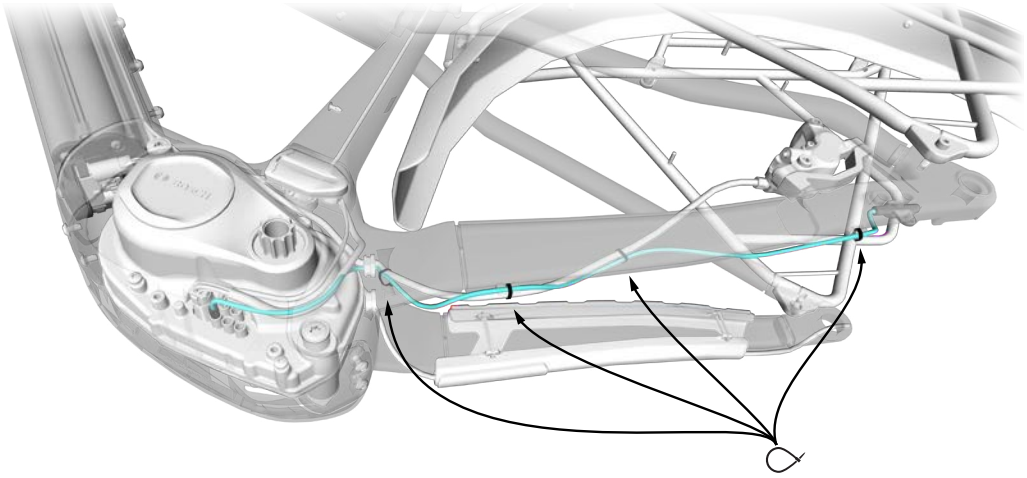

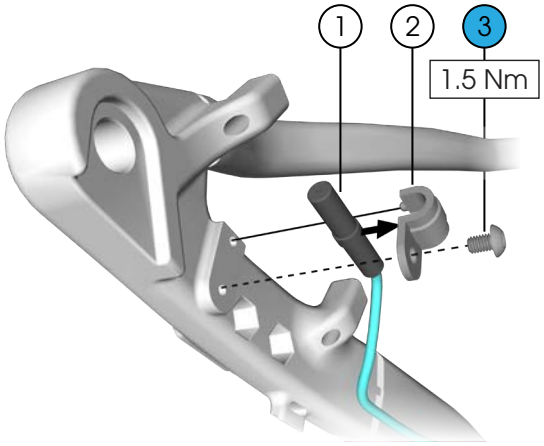

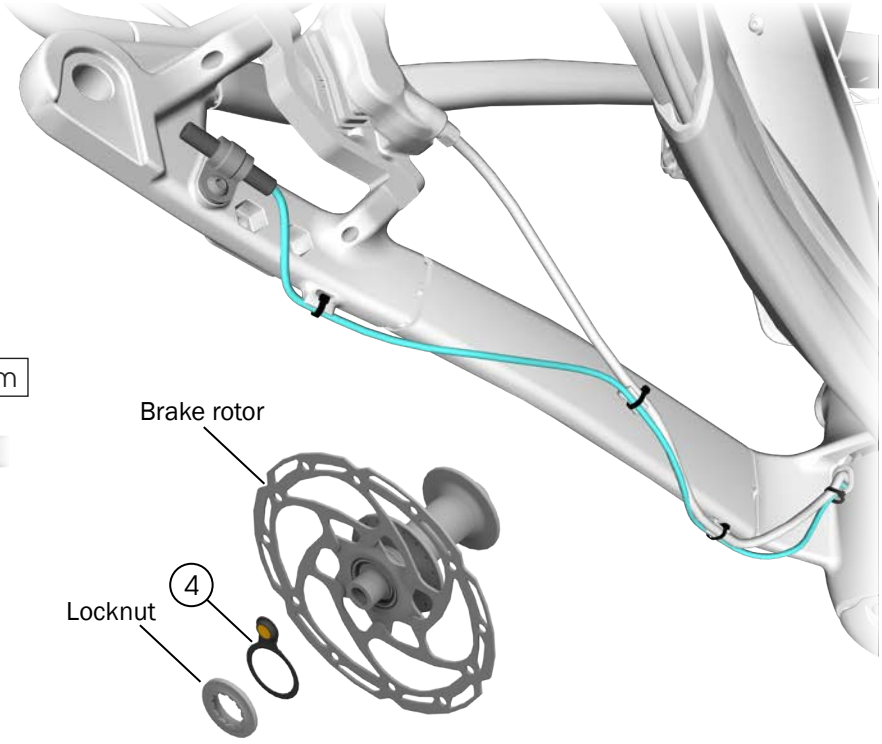

1. Speed sensor/cable (615 mm) — **EB11.200.011*
2. P-clip — **1270.016.038*
3. Fastener (M4 x 6.3 mm)

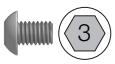

4. Magnet SP-SS20, centerlock rotor — *599404*

**Bosch part number*

Charge socket and battery cables

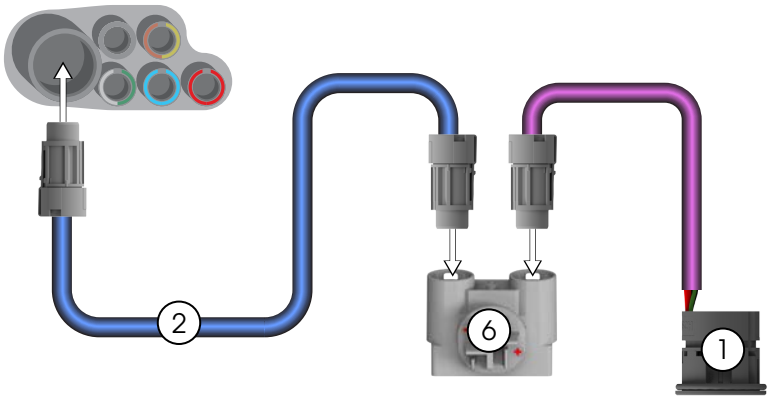

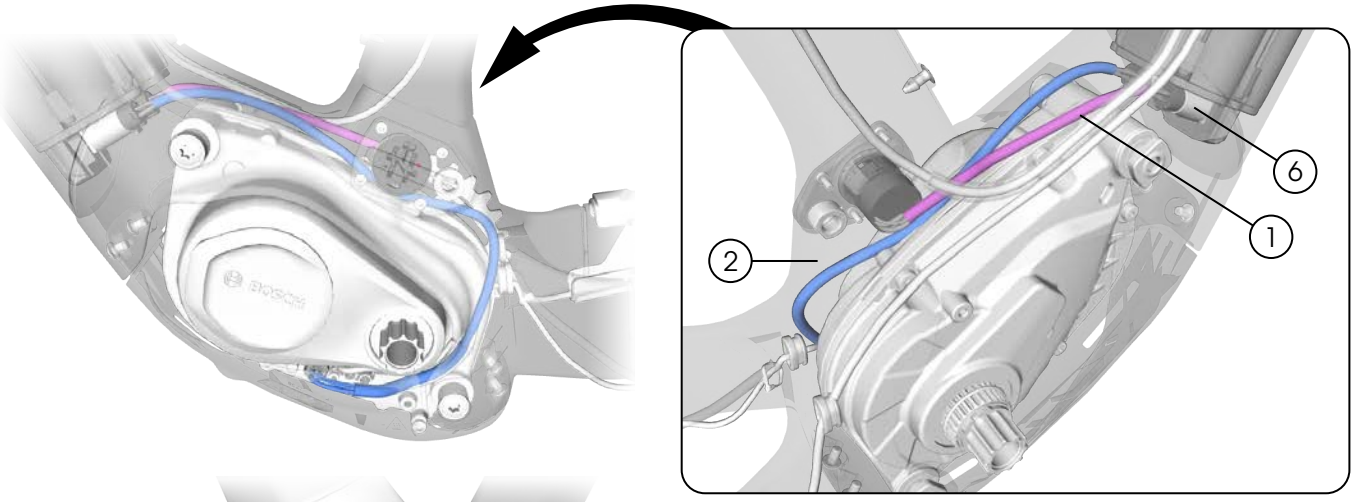

NOTE: Some bicycles may have the battery cable routed underneath the drive unit using a shorter cable. Both routings are acceptable.

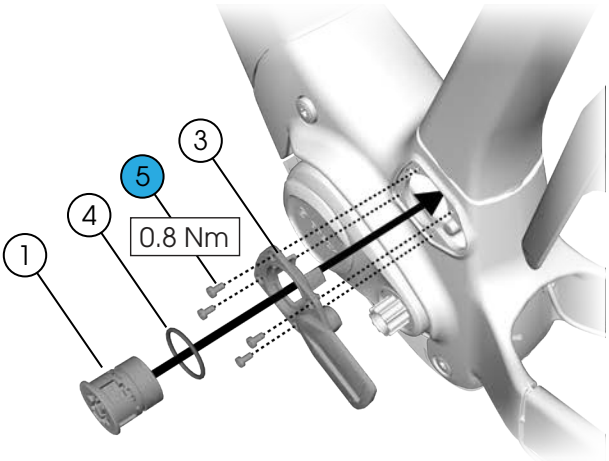

1. Charge socket/cable (350 mm) — **EB12.120.03W*
2. Battery cable (400 mm) — **EB12.120.00T*
3. Charge port cover — *W5312791*
4. O-ring — **EB12.120.019*
5. Fasteners (M3 x 6 mm) — *W5276241*

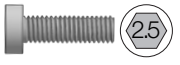

6. Battery outlet — **EB12.100.015*

**Bosch part number*

Front light

SOLD AFTERMARKET

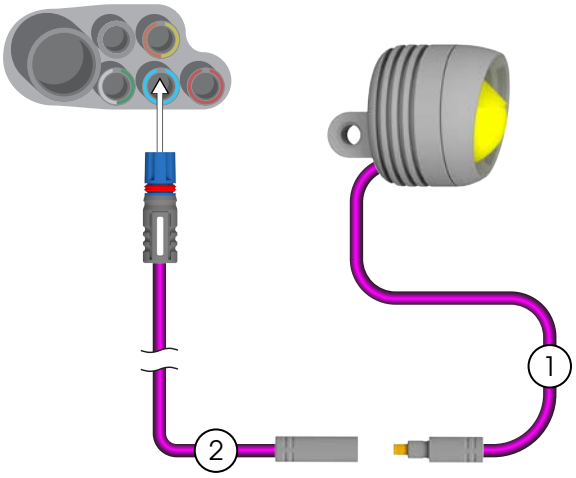

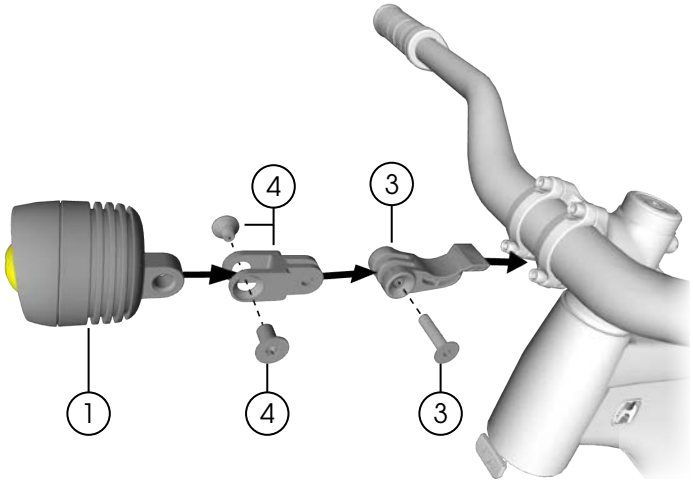

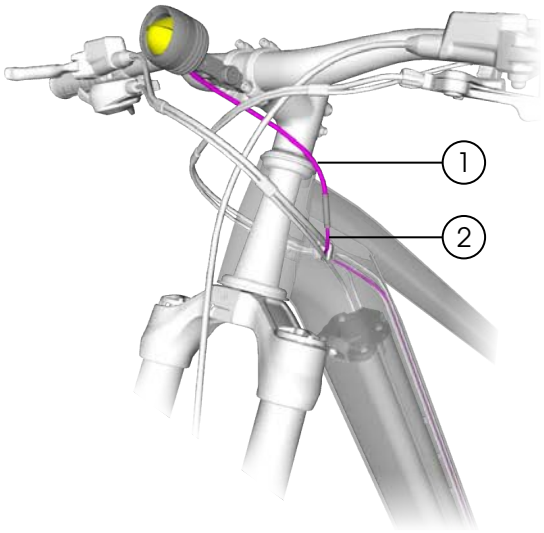

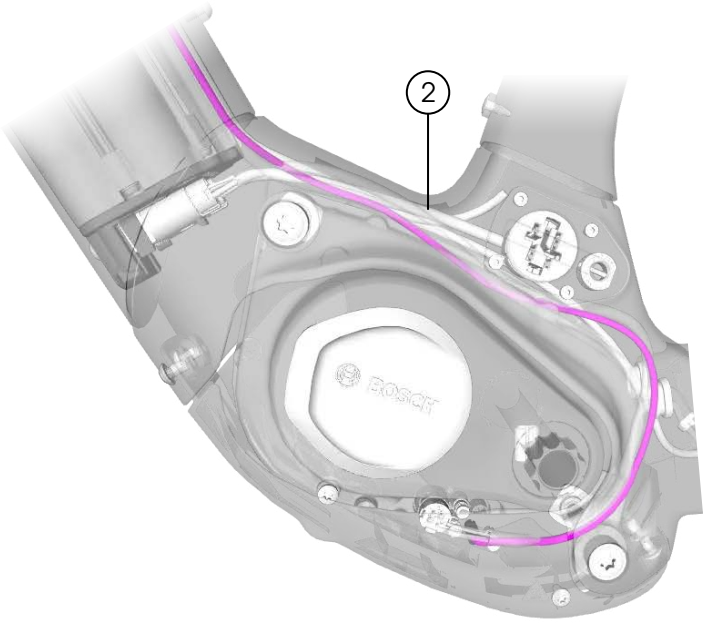

1. Mini 3 front light/cable (100 mm) — *W5329843*
2. Front light cable (1,300 mm) — *W5288000*
3. Blendr base hardware — *W540565* 3
4. Blendr mount hardware — *W5329842* T20

Rear light

SOLD AFTERMARKET

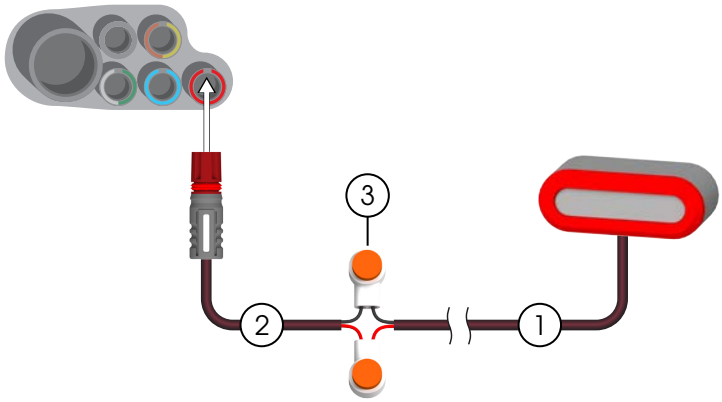

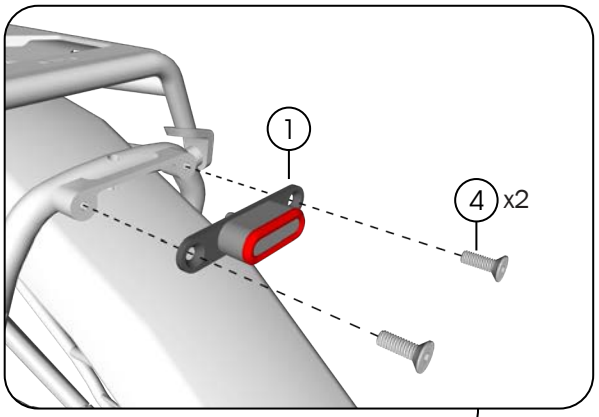

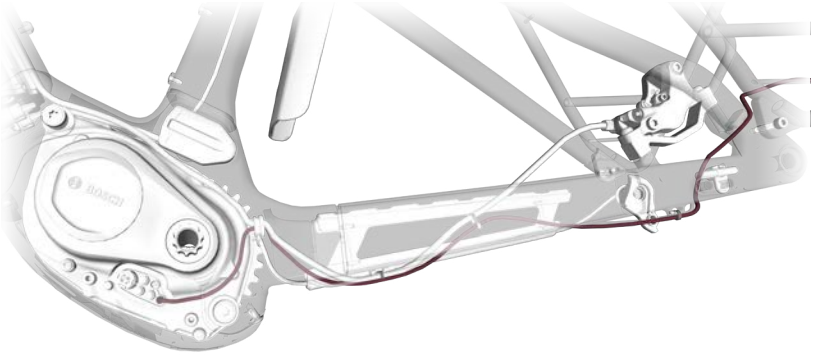

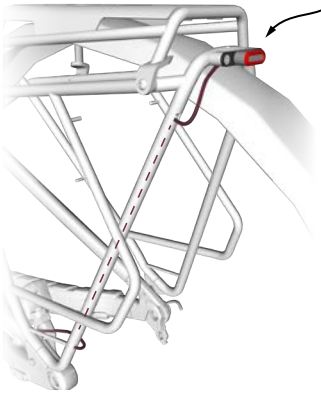

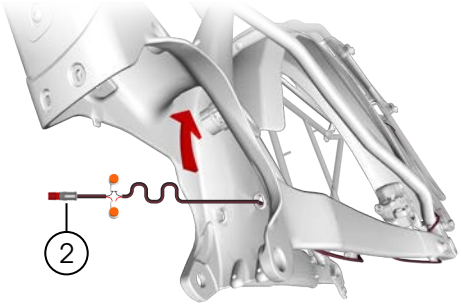

Insert cable slack into seat tube

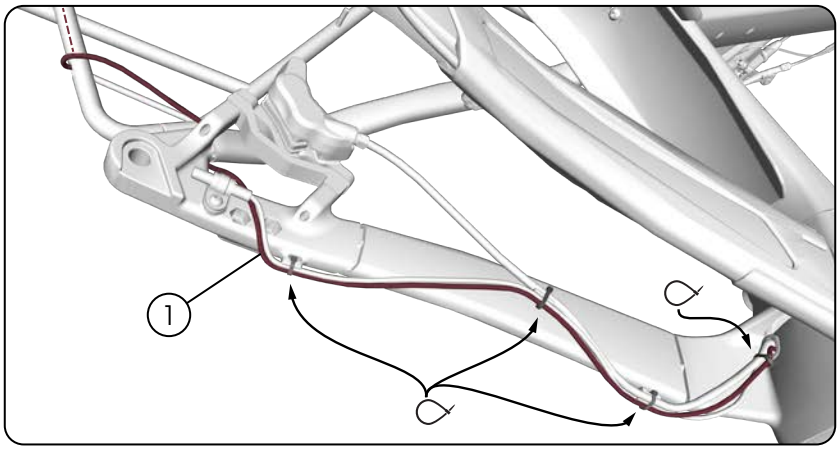

1. Rear light/cable (1,300 mm) — *W5329844*
2. Rear light cable (200 mm) — **EB12.120.00G*
3. Butt splice connectors — *5263818*
4. Fasteners (M4 x 12 mm) 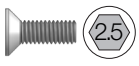

Range extender

SOLD AFTERMARKET

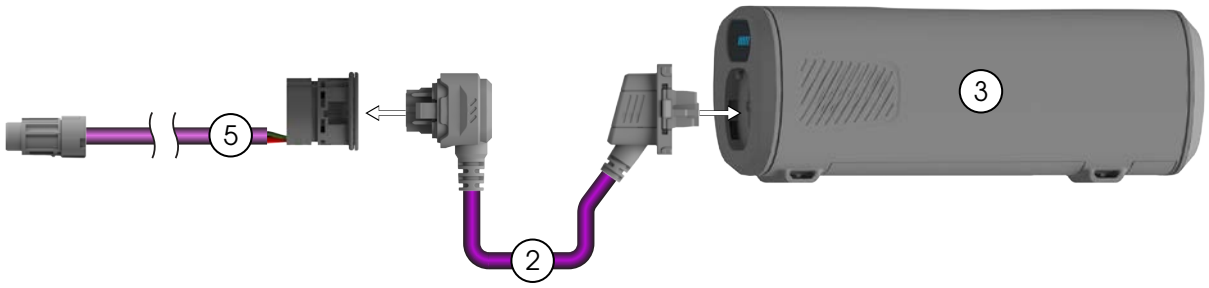

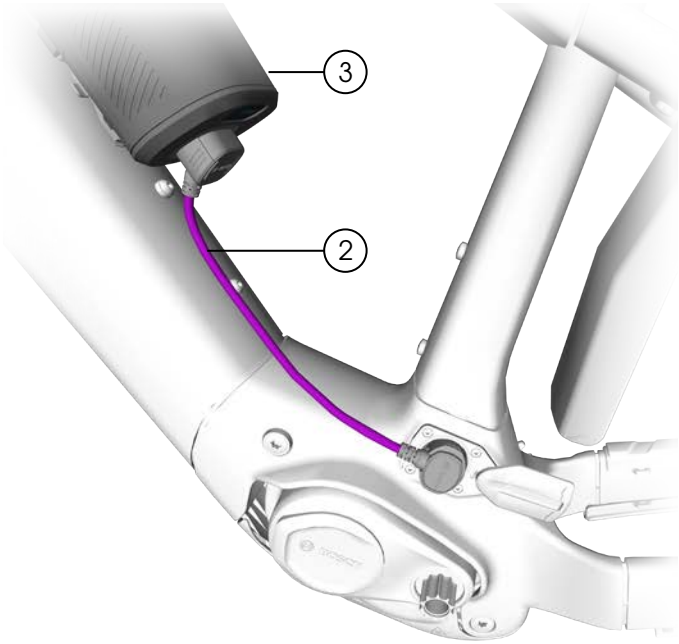



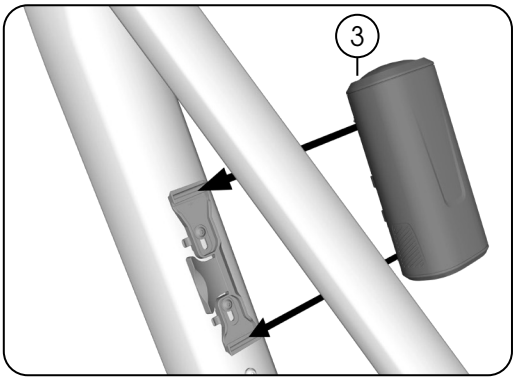

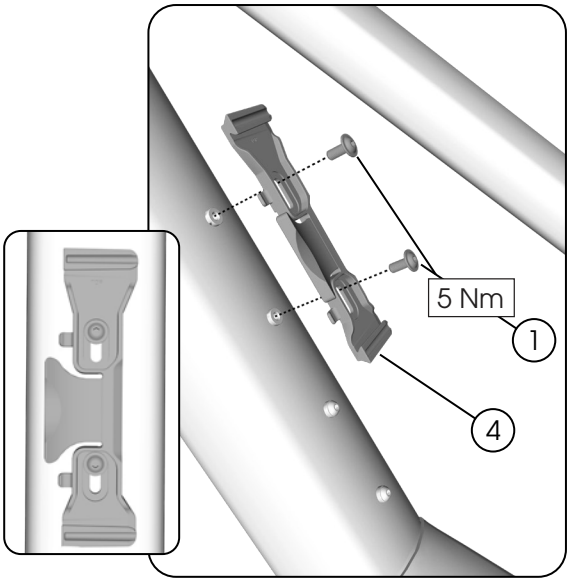

1. Fasteners (M5 x 12 mm) — **EB12.110.01B*

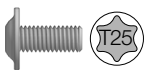

2. ■ PowerMore cable (250 mm) — **EB12.120.08J*
3. PowerMore battery (250 wH) — **EB12.100.02T*
4. Battery holder — **EB12.110.01A*
5. ■ Charge socket/cable (350 mm) — **EB12.120.03W*

**Bosch part number*

Headset and stem

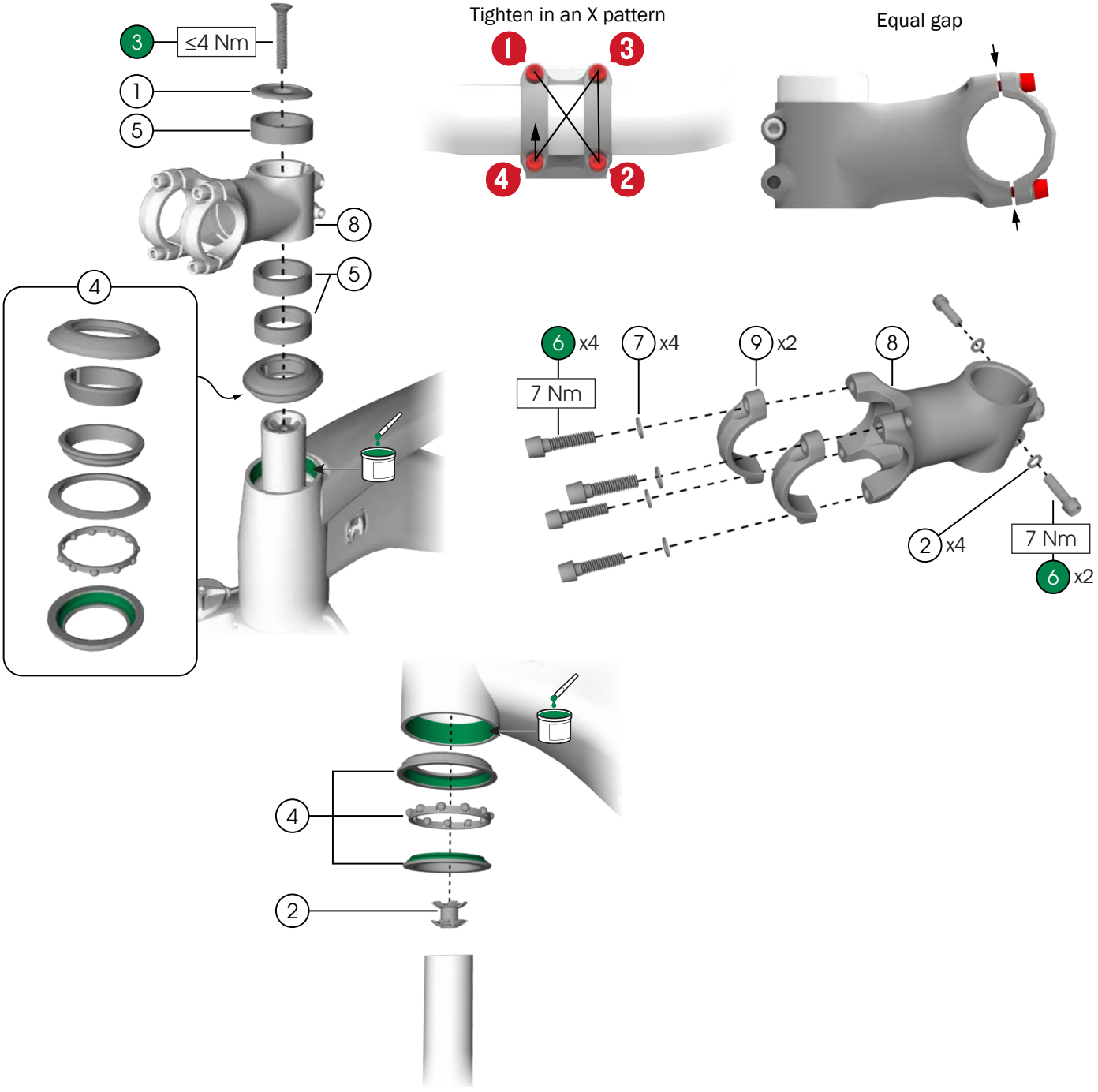

1. Top cap
2. Star nut
3. Fastener (M6 x 35 mm) — 4
4. Headset — *W5271356*
5. Spacers (10 mm) — *5253929*

W545877

6. Fasteners (M4 x 20 mm) — 4
7. Washers (M4)
8. Stem (50 mm)
9. Faceplates

W562039

Drive unit

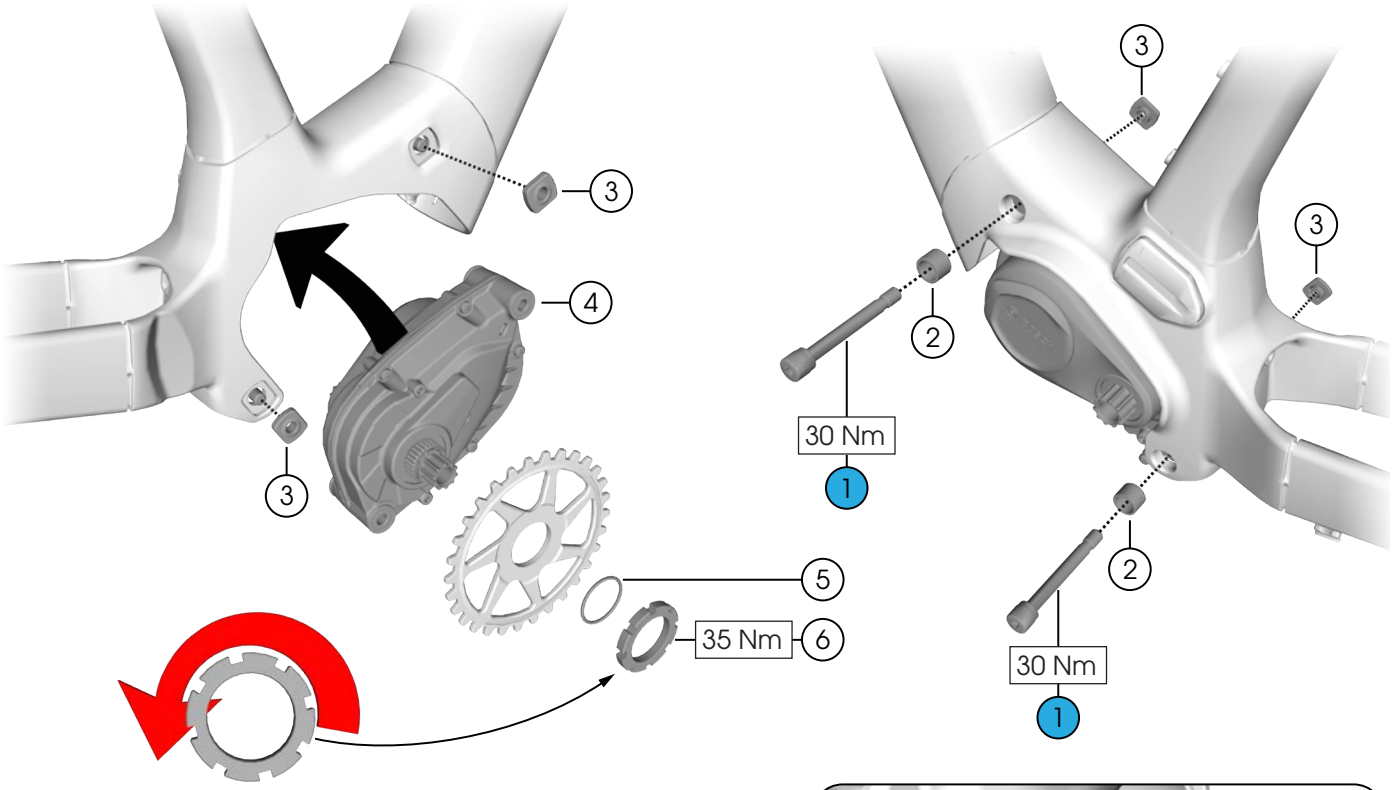

Tighten counter-clockwise

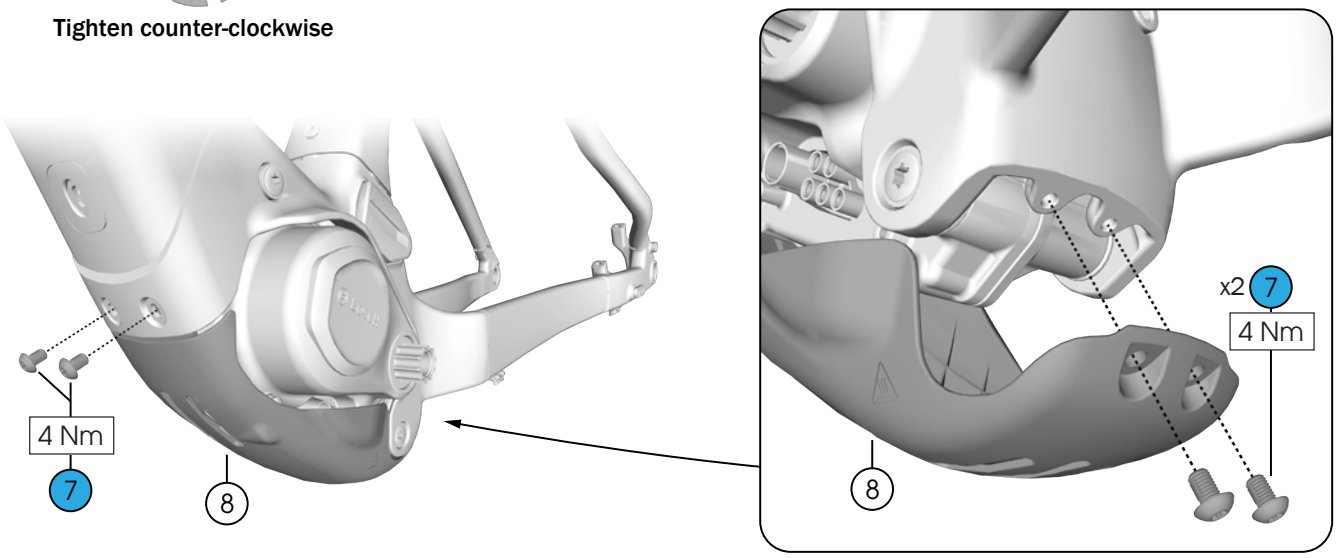

1. Fasteners (M8 x 68.7 mm) — **EB11.200.012G* 

2. Insert sockets — **EB11.200.12F*
3. Nut-squares (M8) — **EB11.200.03C*
4. Drive unit
   - BDU3440 — **EB11.100.00K*
   - BDU3460 — **EB11.100.00L*
5. O-ring — **1270.016.119*
6. Lockring — **EB11.200.0JH* 
7. Fasteners (M5 x 8 mm) — *W598484* 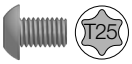

8. Cover — *W5342758*

**Bosch part number*

Battery and docks

CompactTube 400 Wh

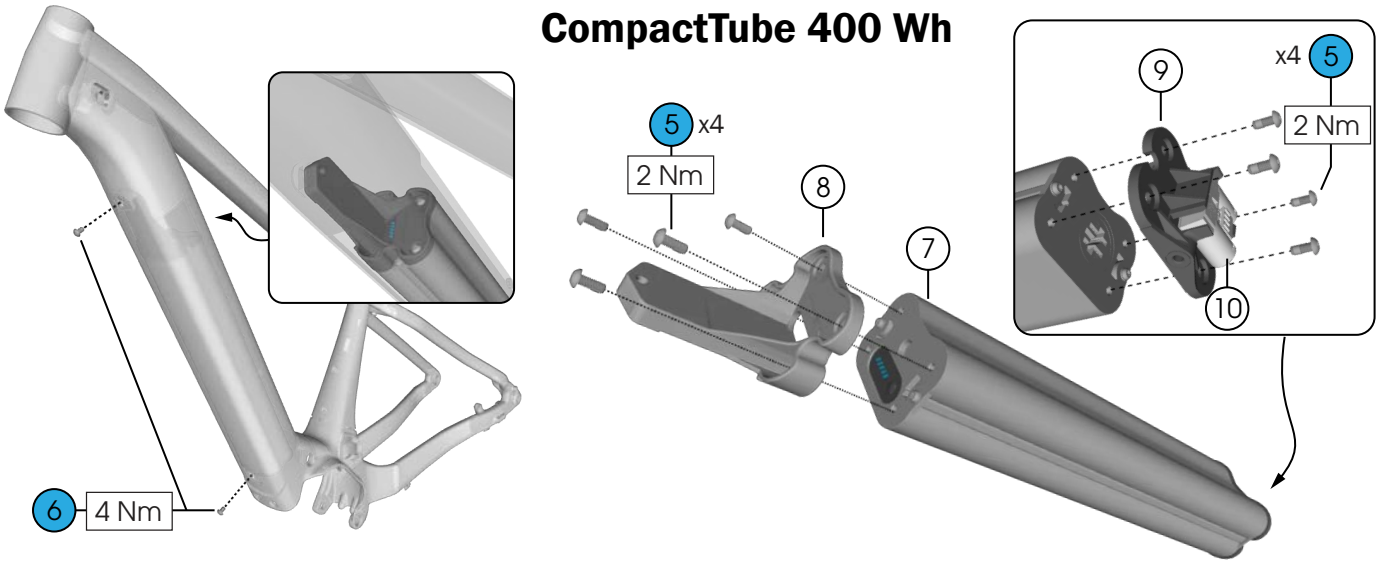

PowerTube 540 Wh

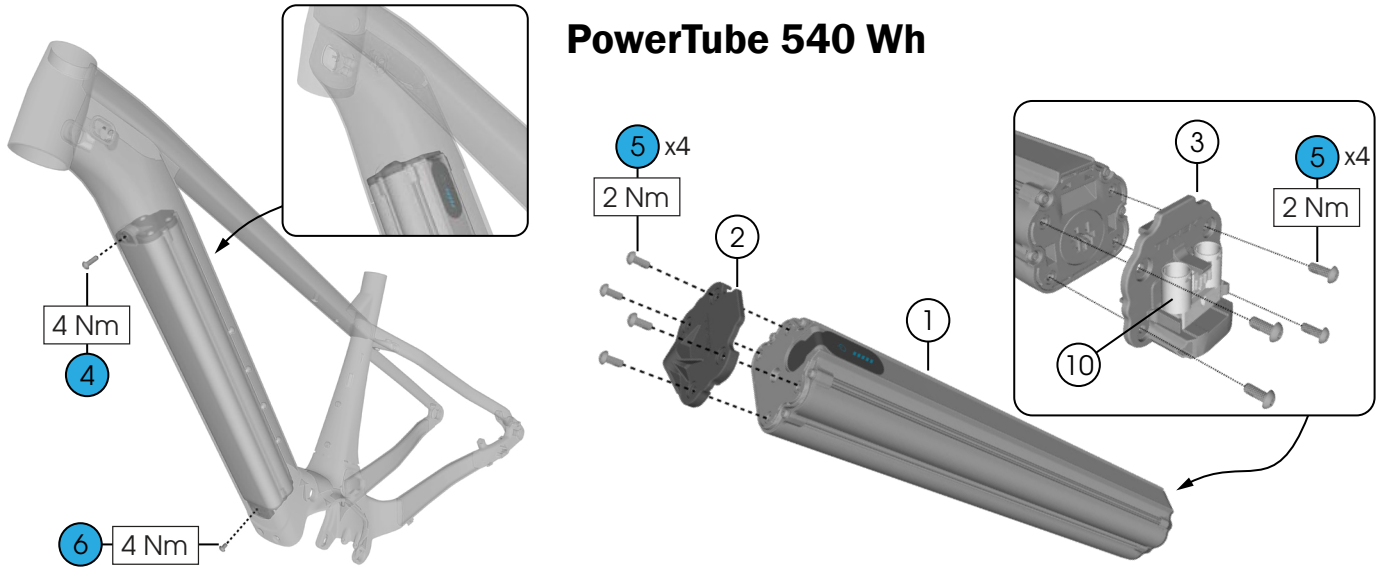

1. Battery, 540 Wh
   - North America — **EB12.100.05R*
   - Rest of world — **EB12.100.05P*
2. End cap, upper — *5357161*
3. End cap, lower — *5357161*
4. Fastener (M5 x 16 mm) — *5328801* 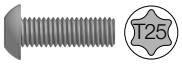
5. Fasteners (M4 x 8 mm) — *W5263894* 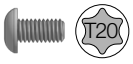
6. Fasteners (M5 x 8 mm) — *W598484* 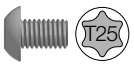
7. Battery, 400 Wh
   - North America — **EB12.100.046*
   - Rest of world — **EB12.100.05X*
8. End caps, upper — *W5344986*
9. End caps, lower — **EB12.200.13V*
10. Battery outlet — **EB12.100.015*

**Bosch part number*

Battery instructions

REMOVE THE BATTERY

- Turn off the e-system.
- Remove the Drive unit.

1. Position the bike so the downtube is horizontal, then remove both battery fasteners.

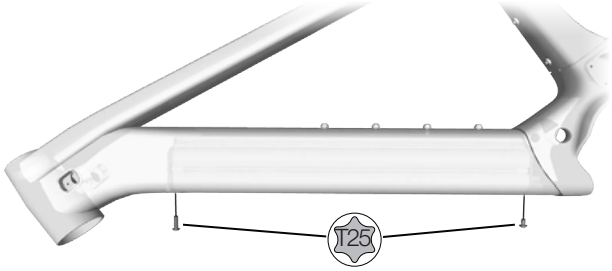

2. Slide out the battery enough so you can remove the plugs.

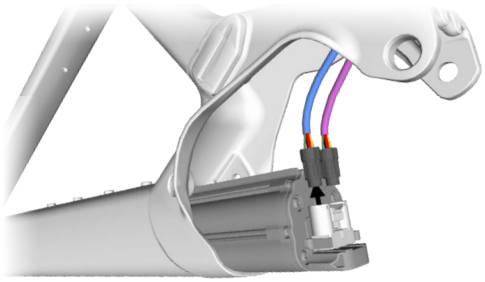

3. Carefully remove the battery.

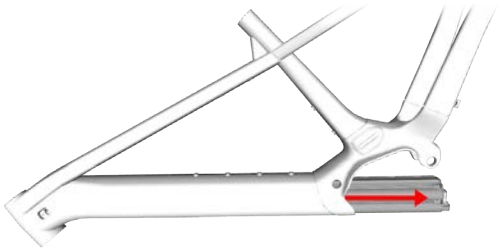

INSTALL THE BATTERY

To verify battery and system operation before installation, connect the battery to both power plugs outside the bike and confirm that the system powers on and functions correctly.

1. With the downtube horizontal, insert the battery far enough to connect both plugs.

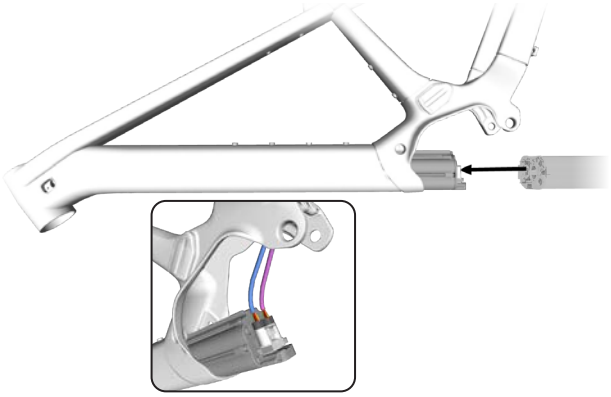

2. Rotate the bike past parallel so the battery slides in under its own weight. Loosely install the upper fastener, then the lower fastener.

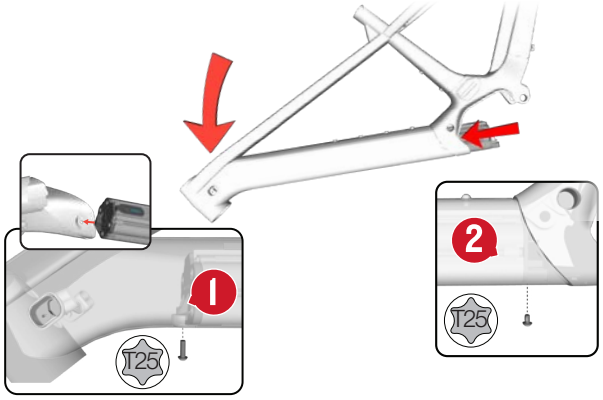

3. Fully tighten both fasteners to 4 Nm.

4. Install the drive unit, connect all plugs, and verify the e-system is working properly.

Rear derailleur hanger and axle

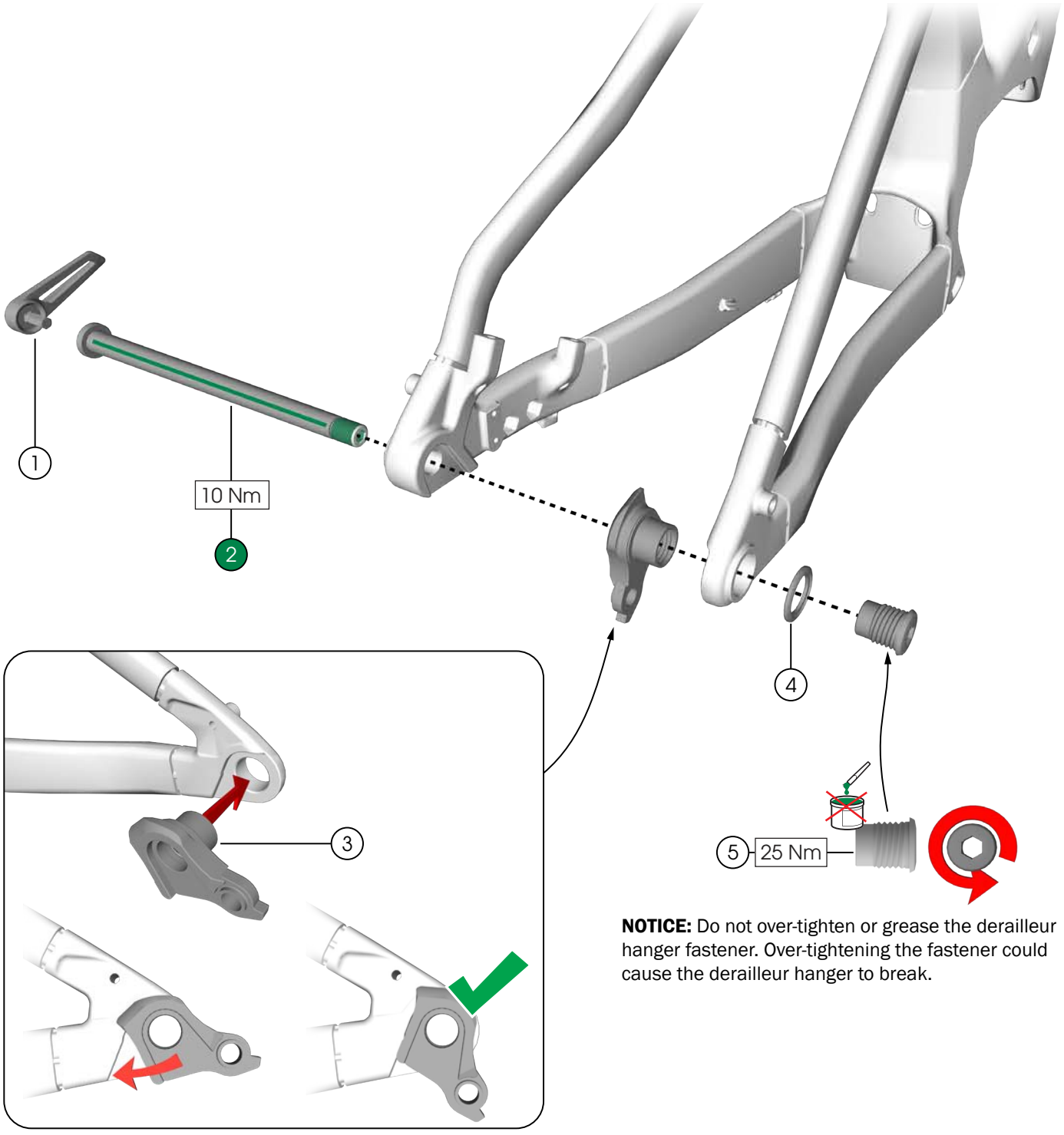

NOTICE: Do not over-tighten or grease the derailleur hanger fastener. Over-tightening the fastener could cause the derailleur hanger to break.

1. Switch lever — *W573860*
2. Rear axle (M12 x 180 mm) — *W5290786*

6

3. Derailleur hanger
4. Washer (25 mm)
5. Fastener (M12 x 16 mm)

— *W5271425*

Frame parts

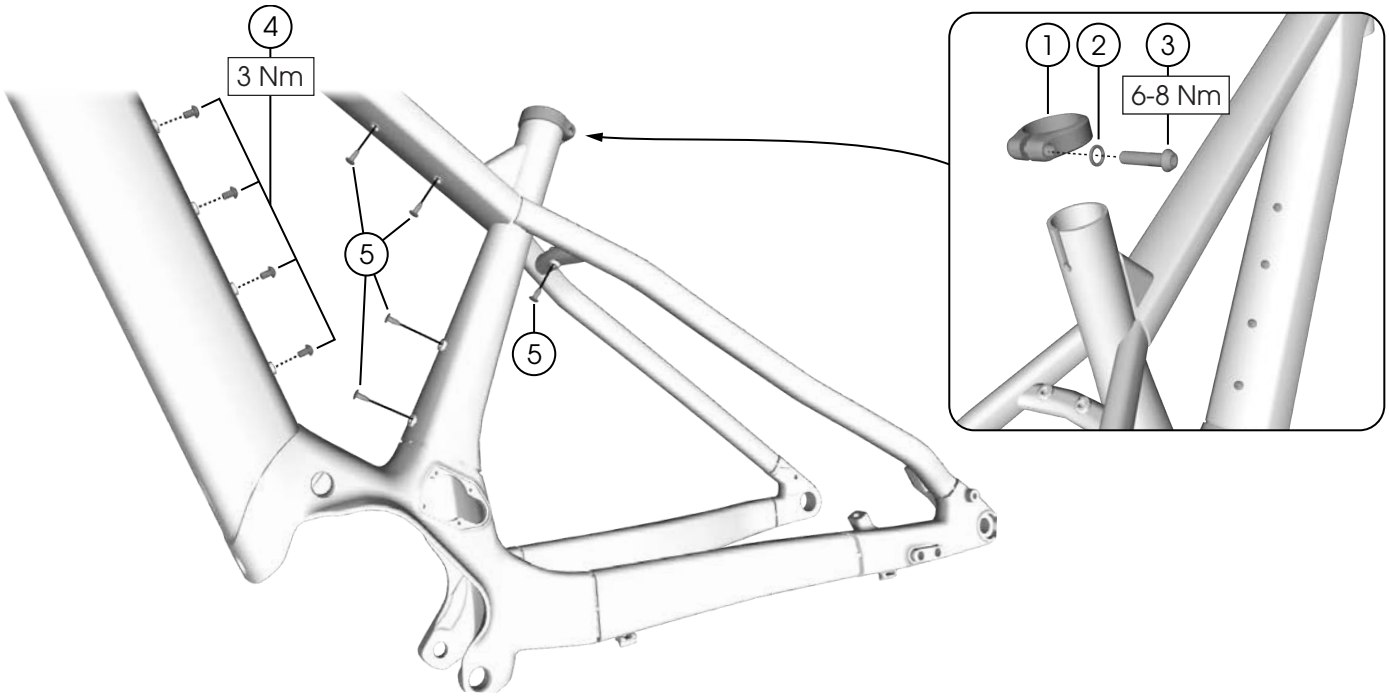

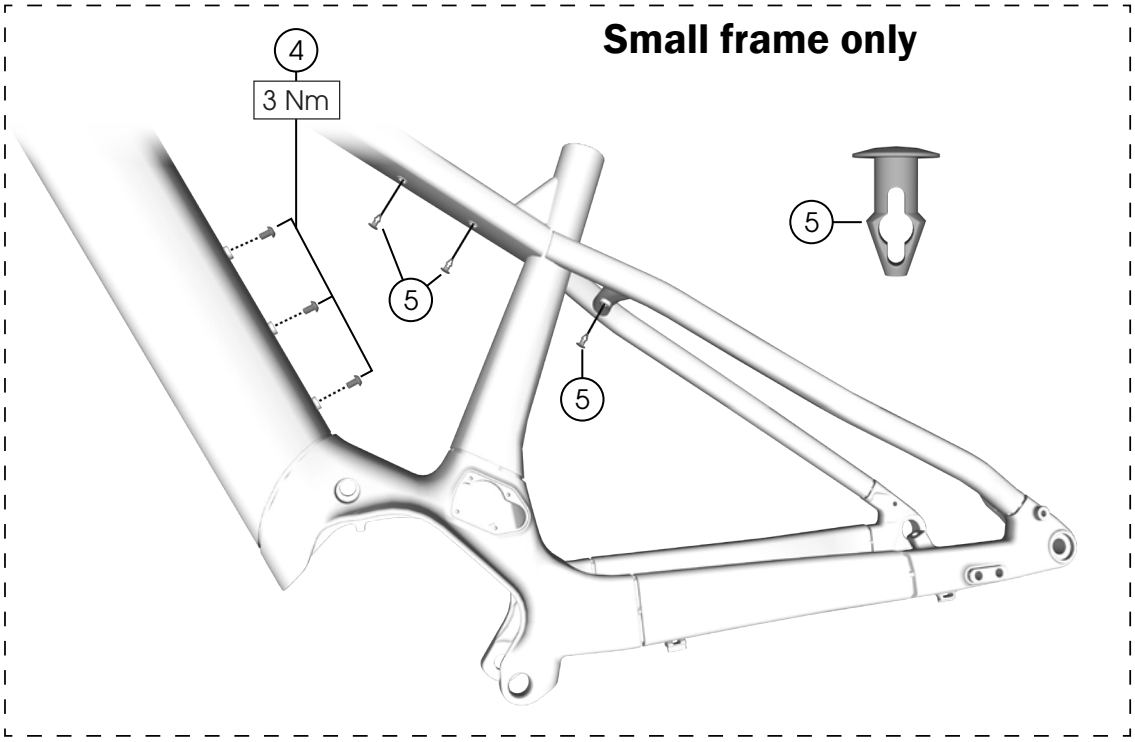

1. Seatpost clamp (36.4 mm)
2. Washer (M6)
3. Fastener (M6 x 24 mm) 4

545458

4. Fasteners (M5 x 8 mm) — *W549307* 3
5. Plugs — *W5350962*

Fenders

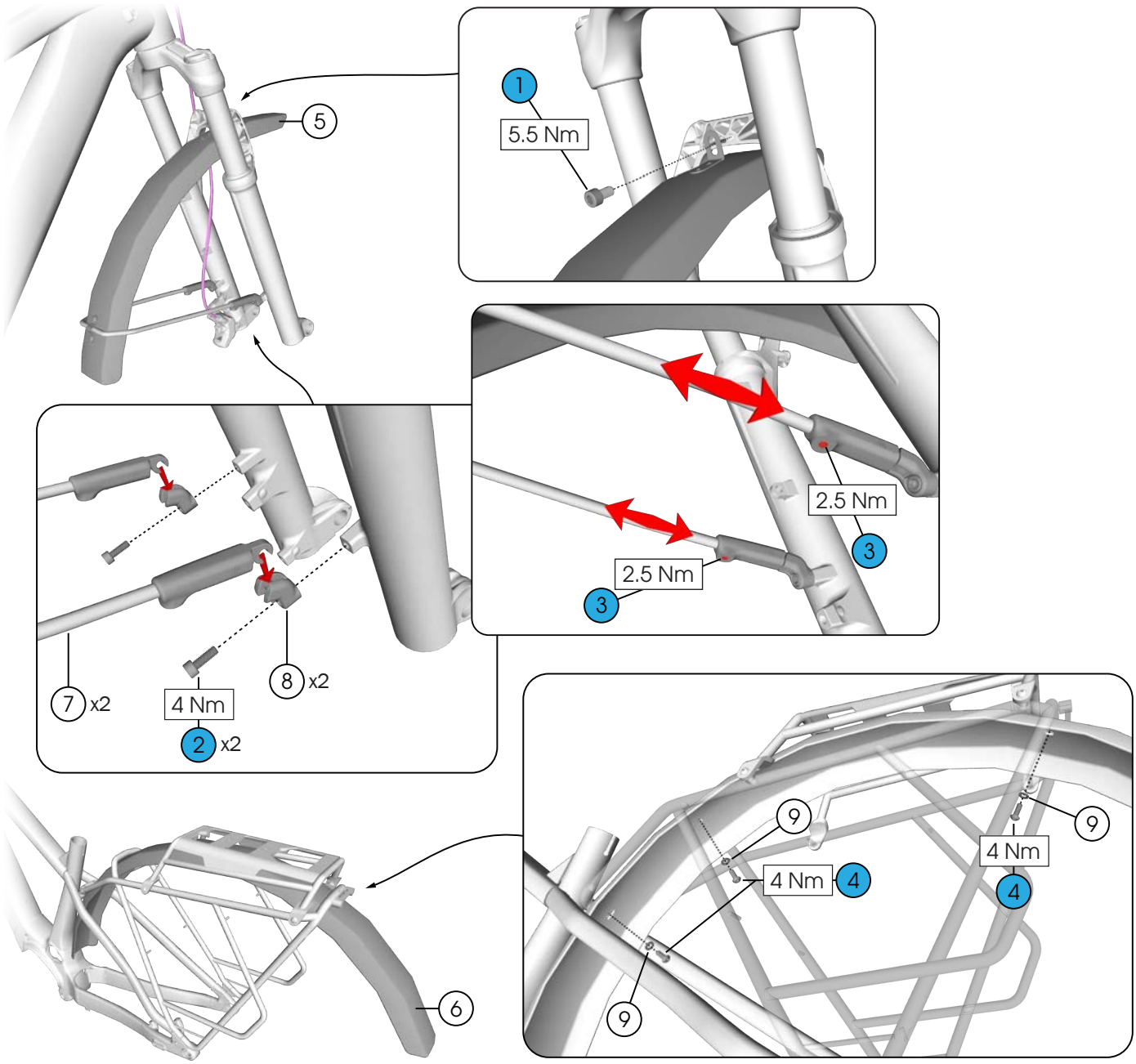

27.5" — *5332868* / 29" — *5332869*

1. Fastener (M6 x 10 mm)
2. Fasteners (M5 x 14 mm)
3. Set screws (M5 x 6 mm)
4. Fasteners (M5 x 14 mm)
5. Front fender
6. Rear fender
7. Stays
8. Stay mounts
9. Washers (M5)

Rear rack

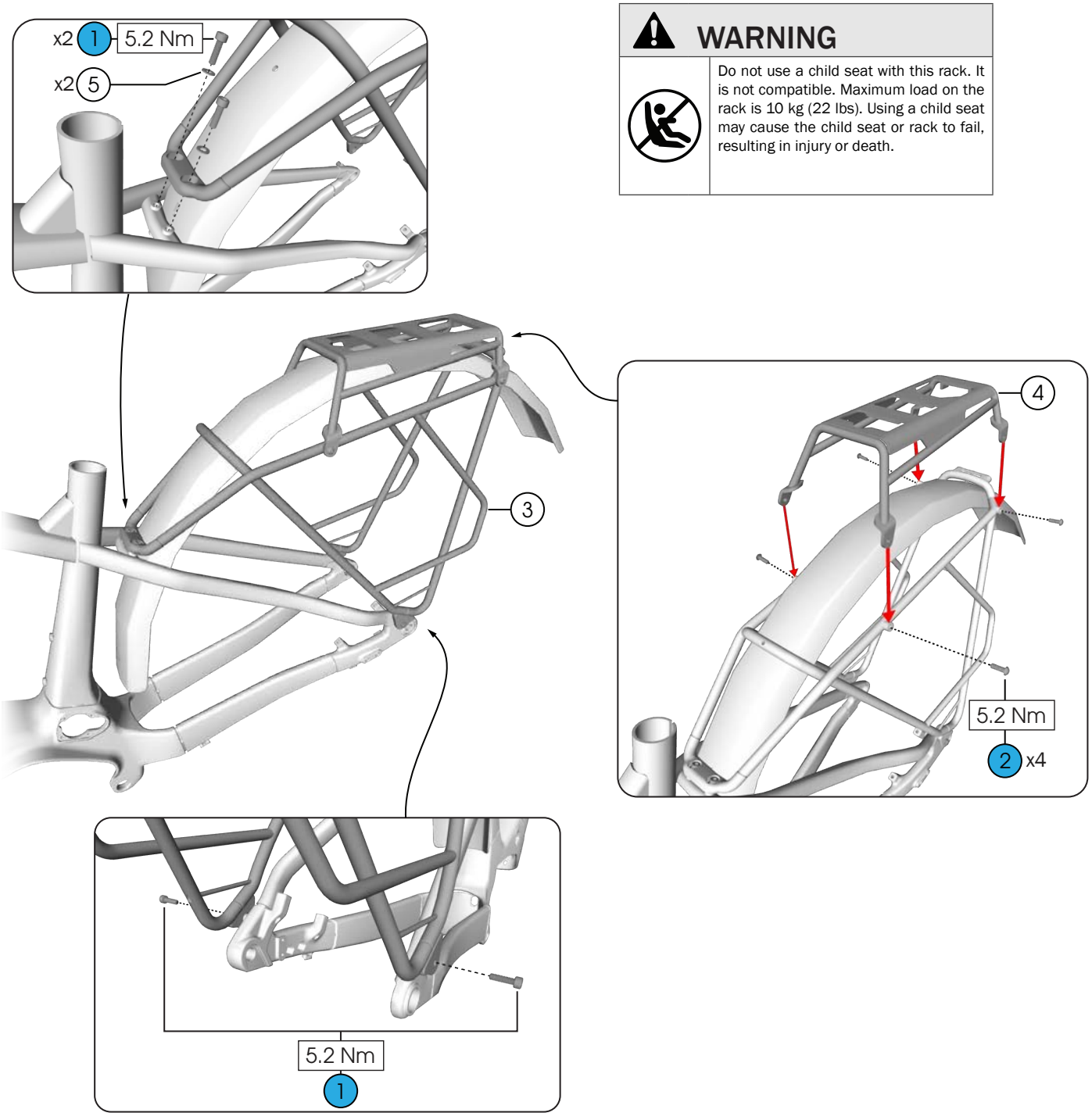

WARNING

Do not use a child seat with this rack. It is not compatible. Maximum load on the rack is 10 kg (22 lbs). Using a child seat may cause the child seat or rack to fail, resulting in injury or death.

27.5" — 5330443 / 29" — 5330444

1. Fasteners (M5 x 18 mm)
2. Fasteners (M5 x 16 mm)
3. Rear rack

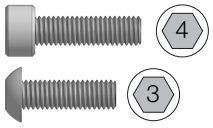

4. Upper rack
5. Washers (M5)

Specifications

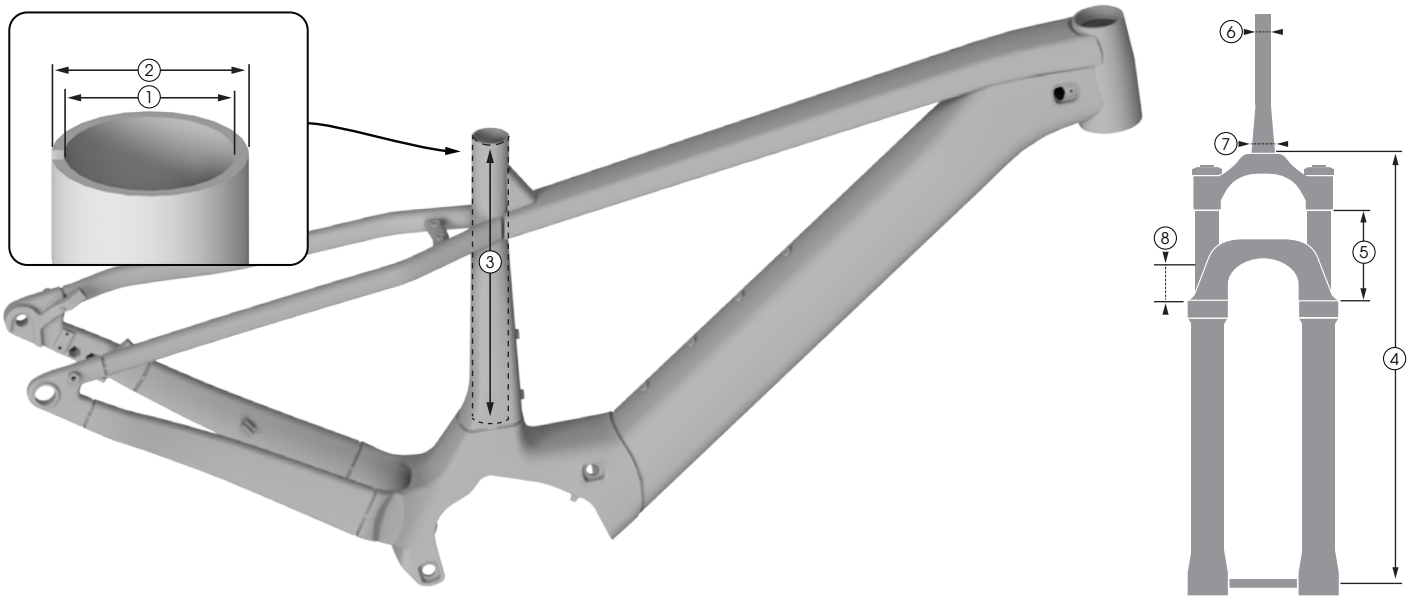

Seatpost

1	**Seatpost OD**	31.6 mm	
2	**Seatpost clamp ID**	36.4 mm	
3	**Max insertion**	S:	265 mm
		M:	295 mm
		L:	315 mm
		XL:	345 mm
	Min insertion	Follow manufacturer's recommendation	

Fork

4	**Axle to crown (max)**	S	508 mm
		M/L/XL	551 mm
5	**Travel (max)**	S	100 mm
		M/L/XL	120 mm
6	**Steerer tube OD, upper**	28.6 mm / 1-1/8"	
7	**Steerer tube OD, lower**	38.1 mm / 1-1/2"	
8	**Sag**	Follow the Suspension Calculator	

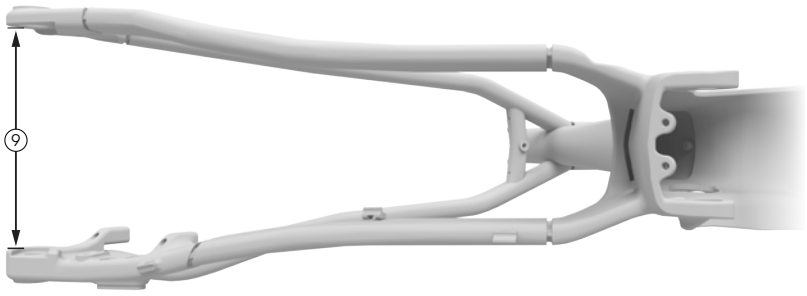

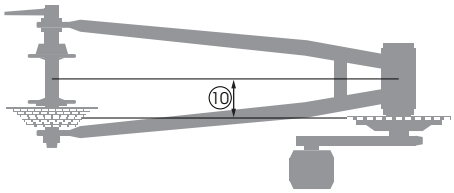

Frame

9	**Rear hub over-locknut-dimension**	148 mm	
	Brake rotor OD	180 mm (adaptable to 203 mm)	
	Tire width Front	Max:	See fork manufacturer
	Rear (S)	Max:	27.5" x 2.6" (70-584 ETRTO)
		Max (with fenders):	27.5" x 2.4" (70-584 ETRTO)
	Rear (M/L/XL)	Max:	29" x 2.6" (66-622 ETRTO)
		Max (with fenders):	29" x 2.4" (66-622 ETRTO)
	Headset	ZS44 upper / ZS56 lower	

Drivetrain

10	**Chainline**	55 mm	
	Chainring teeth (T)	Min:	34 T
		Max:	42 T

ID = inner diameter

OD = outer diameter

S = small frame

M = medium frame

L = large frame

XL = extra large frame