Set WHEEL SIZE - MPH/KPH - TIME - [any other settings]
prior to installation Follow manual for setup

1. *Mount display-mount on handlebar*
   Attach display to mount
2. *Attach sensor to right fork leg*
   Attach Magnet to drive-side spoke
3. *Sensor - magnet proximity from 1-3mm*
4. *Final positioning*

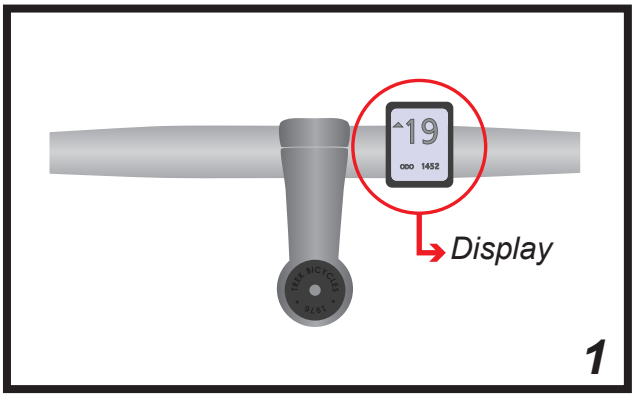

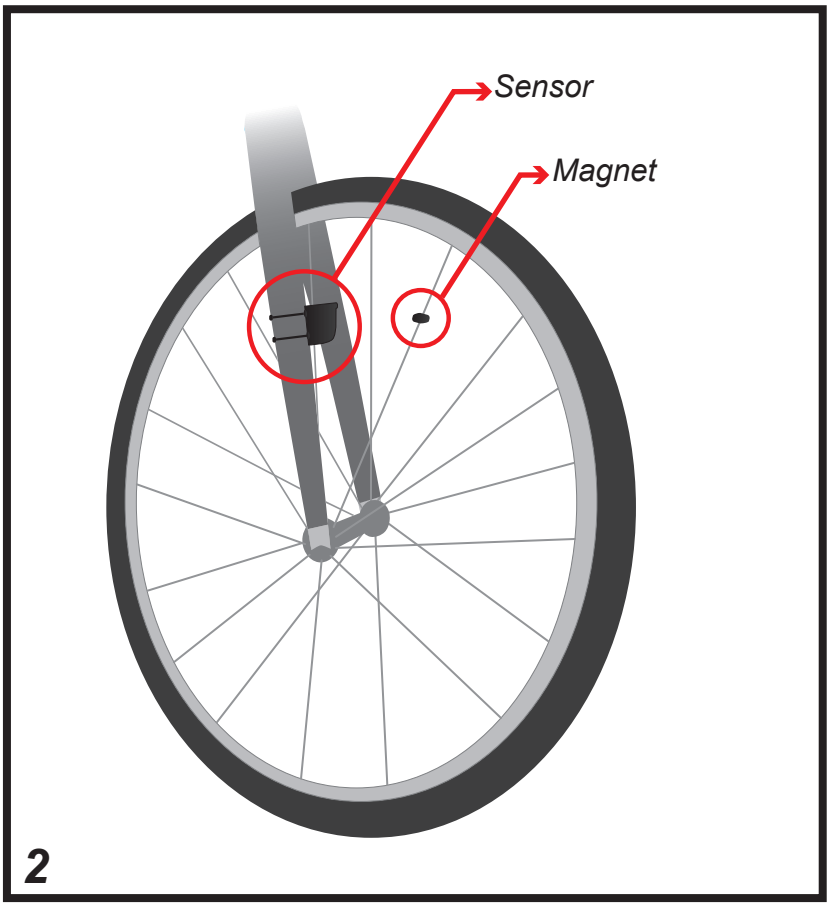

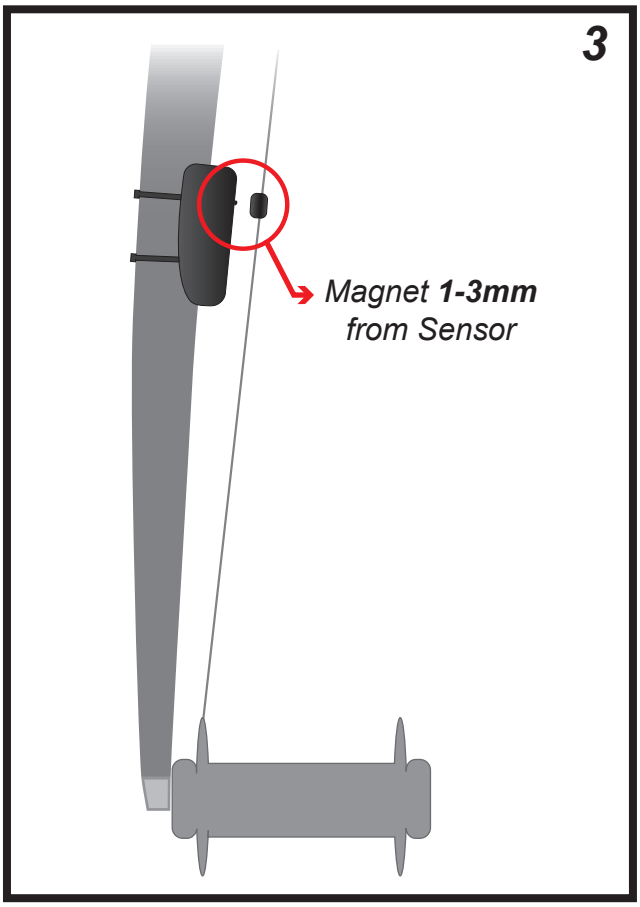

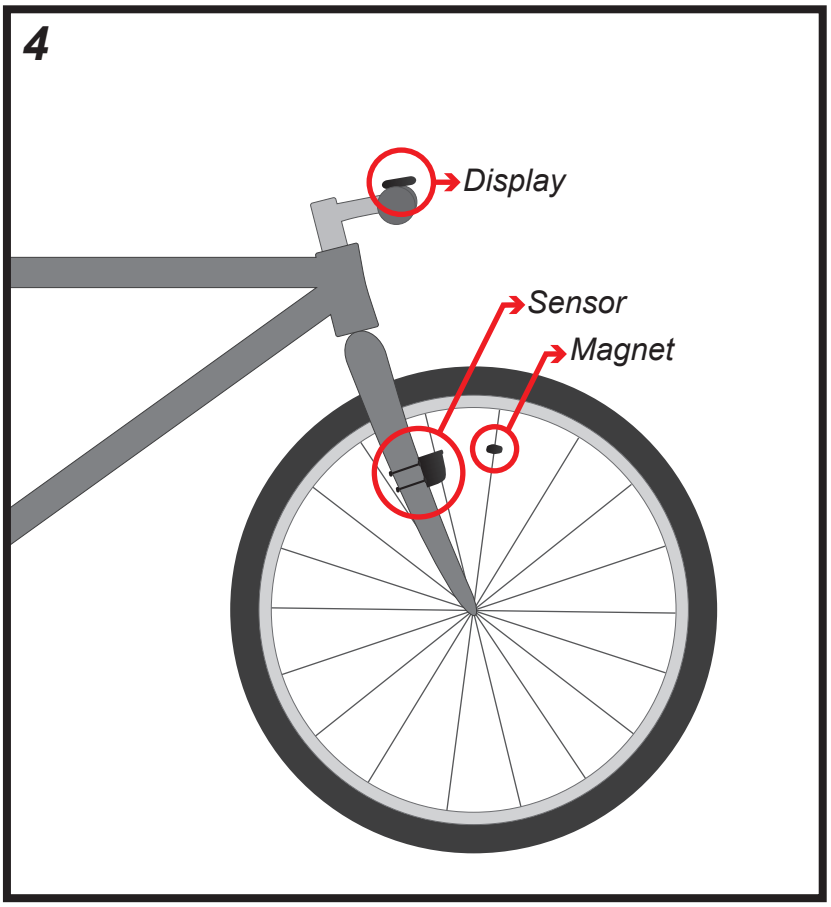

Appearance of individual Computer Components may differ - Use for basic position setup only
Please see your local Trek Dealer for additional installation assistance.

TREK