


# 2022 MADONE SL

## SERVICE MANUAL SUPPLEMENT

# Contents




Brake lines



Shift cables — mechanical



Shift cables — Di2



T47 bottom bracket

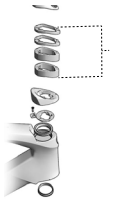

Fork and headset

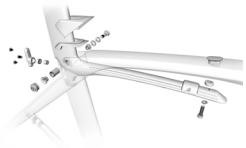

IsoSpeed



Seatpost


## Safety

**WARNING**

**Properly tighten hardware**

Always tighten hardware to the specified torque. Over-tightening hardware could deform or break the hardware or components. Under-tightening hardware could cause hardware or components to become loose. Either situation could damage the bicycle and result in injury to the rider.

**WARNING**

**Reapply threadlocker**

All reused-fasteners with pre-applied threadlocker must be cleaned with isopropyl alcohol and have new threadlocker applied (Loctite 243 or equivalent) before re-assembly. If threadlocker is not applied, the fasteners may loosen which could damage the bicycle and result in injury to the rider.

## Legend

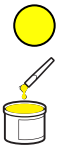

Apply appropriate grease

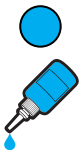

Apply threadlocker

Nm Torque

★ Cable (zip) tie

Copyright 2021 Trek Bicycle Corporation All Rights Reserved

# Brake lines

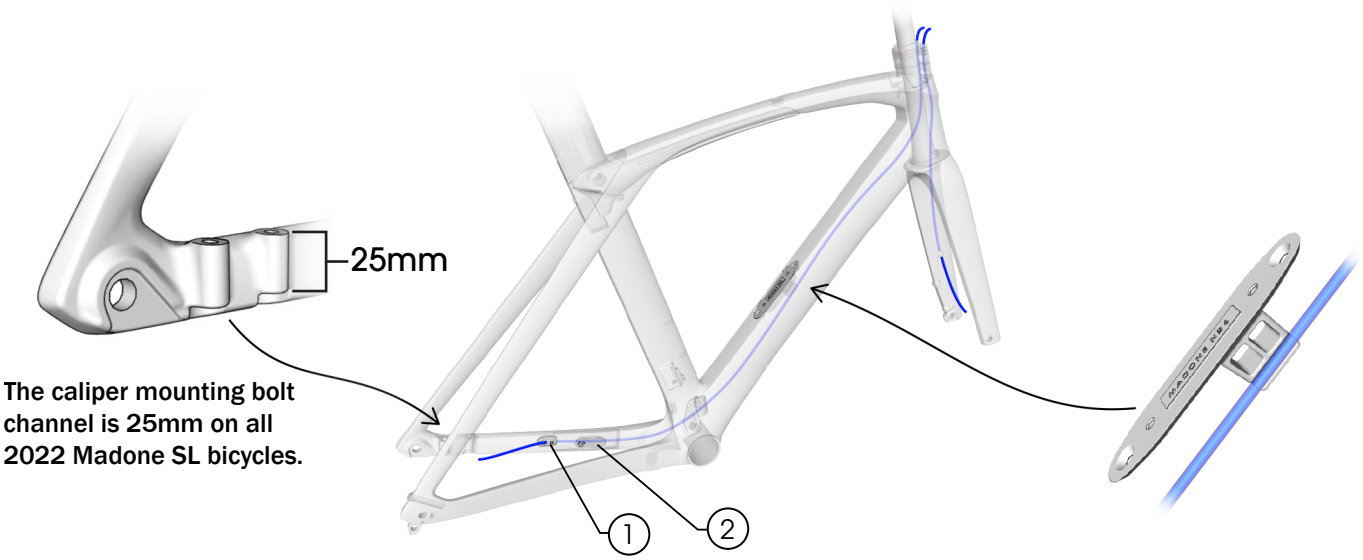


**The caliper mounting bolt channel is 25mm on all 2022 Madone SL bicycles.**

1. Housing grommet — *W330578*
2. DuoTrap cover — *W521455*

## Route the front hose

1. Connect the caliper to the front brake hose using a new barb and olive.
2. Route the brake hose through the lower end of the fork to the steerer tube.
3. Attach the caliper to the fork. Do not fully torque the mounting bolts until the caliper is aligned correctly.

## Route the rear hose

1. Connect the caliper to the rear brake hose using a new barb and olive.
2. Feed the hose through the grommet.
3. Route the brake hose through the chainstay to the head tube.
4. Attach the caliper to the bicycle. Do not fully torque the mounting bolts until the caliper is aligned correctly.

For additional information on brakes, refer to the user manuals at the websites below:

- SRAM www.SRAM.com
- Shimano www.Shimano.com

# Shift cables — mechanical

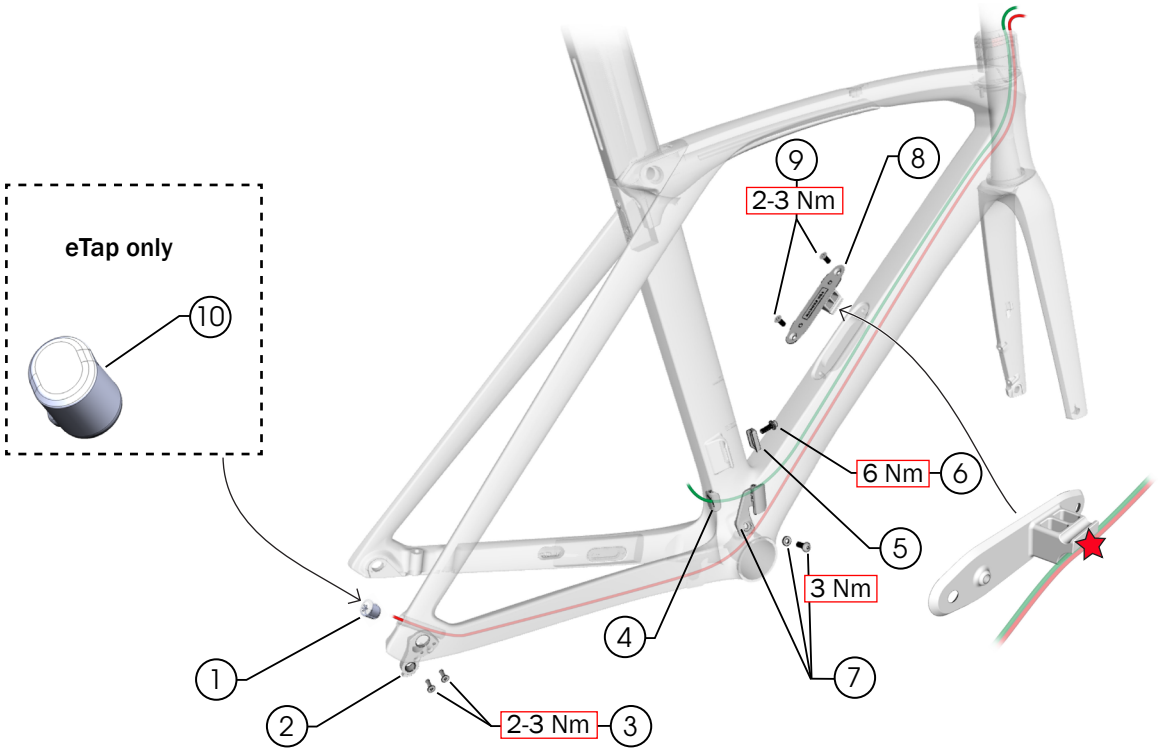


1. Rear housing grommet — *W317292*
2. Rear derailleur hanger — *W524188*
3. Rear derailleur hanger bolts — *W318604*
4. Front housing grommet — W*326042*
5. Front derailleur hanger — *W531901*
6. Front derailleur bolt — *W543903*
7. Chainkeeper parts — *573827*
8. Control center — *W1044890*
9. Flat head bolts — *W304515*
10. eTap grommet plug — *W547906*

## Route the cables back to front

1. Feed each cable through the corresponding grommet.
2. Route the rear shift cable through the seat stay to the head tube.
3. Route the front shift cable through the seat tube to the head tube.
4. Mark the front and rear shift cables with masking tape. You will need to tell them apart when you assemble the headset.
5. Attach each derailleur to the bicycle.
6. Connect the shift cables to the derailleurs.
7. Zip tie the shift cables and rear brake hose to the control center.

# Shift cables — Di2

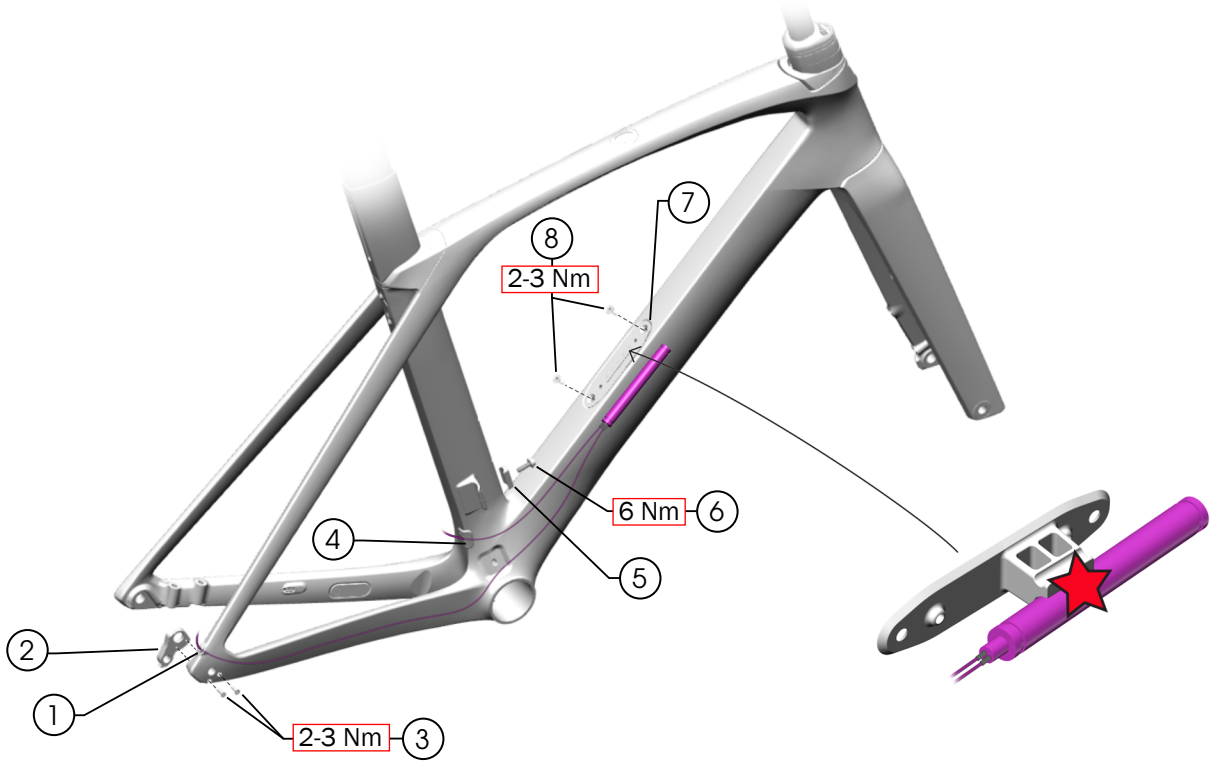


1. Rear housing Di2 grommet — *W317292*
2. Rear derailleur hanger — *W524188*
3. Rear derailleur hanger bolts — *W318604*
4. Front housing grommet — *W326042*
5. Front derailleur hanger — *W531901*
6. Front derailleur bolt — *W543903*
7. Control center — *W1044890*
8. Flat head bolts — *W304515*

## Route the cables back to front

1. Feed each wire through the corresponding grommet.
2. Route the rear shift wire through the seat stay to the control center opening in the down tube.
3. Route the front shift cable through the seat tube to the control center opening in the down tube.
4. Attach each derailleur to the bicycle.
5. Connect the shift wires to the derailleurs and the battery.
6. Zip tie the battery and rear brake hose to the control center.

# T47 bottom bracket (BB)

## Install the BB

1. Apply grease to the threading on both sides of the frame.

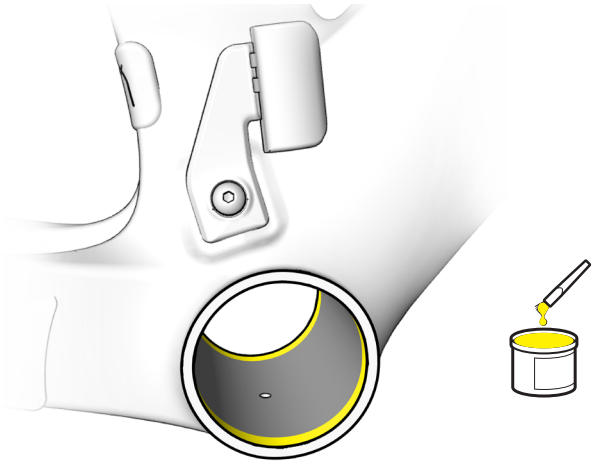

2. Using your hands, thread the BB onto the frame.

> **NOTICE:** Do not start by tightening the BB with a tool. Dirt and other contaminants can damage the threading.

3. Use the proper tool to torque both sides to spec (see the Tool and spline compatibility table below).
4. If necessary, add spacers before installing the cranks (see the Spacers required table at the top right).

## Spacers required

The table below contains BB/crank combinations that require spacers. Your bicycle may have other combinations that do not require spacers.

| Crank | | BB (inboard) | Spacers required | |
|---|---|---|---|---|
| | | | Drive side | Non-drive side |
| Shimano | | CeramicSpeed 24mm | 0.5mm | 0.5mm |
| SRAM | DUB | SRAM DUB | 2-3mm | — |
| | GXP | Wheels MFG | 1.0mm | — |

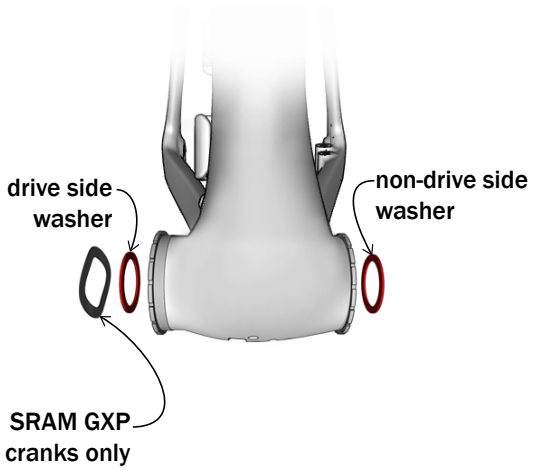


## Tool and spline compatibility

| | Tool | | Praxis | | Unior | Park | Wheels Mfg | CeramicSpeed |
|---|---|---|---|---|---|---|---|---|
| | Model<br>*Part number* | | TP-2400<br>*594148* | TP-3028<br>*594147* | 1671.T47<br>*1043614* | BBT-47<br>*568922* | BBTOOL-48-44<br>*589307* | — |
| BB manufacturer | Praxis | 24mm | X | | X | | | |
| | | 30mm | | X | X | | | |
| | Wheels MFG | | | | | | X | |
| | SRAM DUB | | | | X | X | | |
| | Chris King | | | | X | X | | |
| | Ceramic-Speed | 24mm | | | X | X | | X |
| | | GXP | | | | | | X |

# Fork and headset

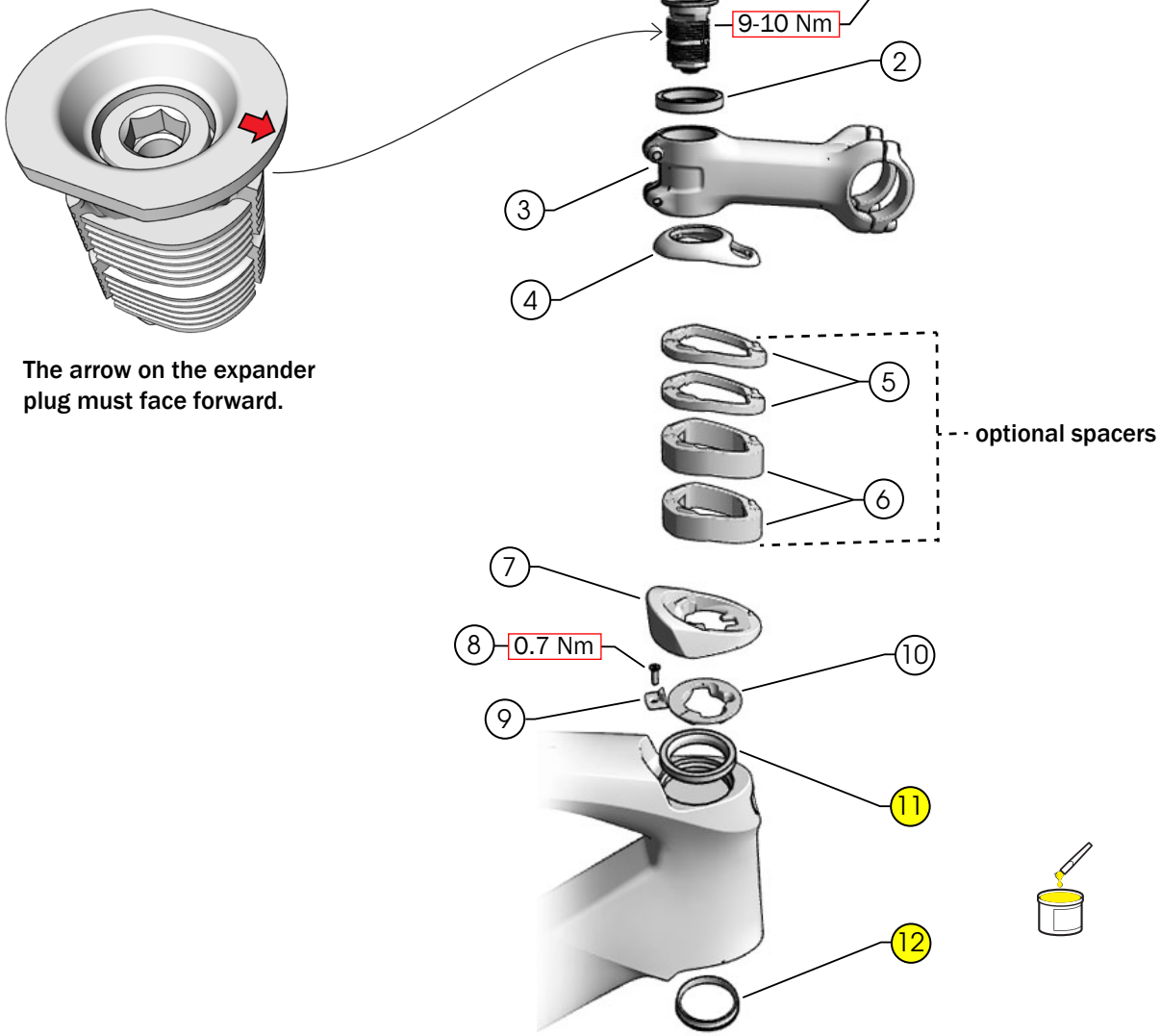


**The arrow on the expander plug must face forward.**

1. Expander plug — *W5257464*
2. Spacer (5mm) — *5253930*
3. Stem (as shown) — *564744*
4. Routing spacer — *W5264867*
5. Spacers (5mm) — *5253093*
6. Spacers (15mm) — *5253094*
7. Top cap (black) — *W5251927*
8. Steerer stop bolt — *W318529*
9. Steerer stop — *W5265664*
10. Split ring — *W563834*
11. Upper headset bearing — *W513538*
12. Lower headset bearing — *W540243*

# Fork and headset

## Install the headset

1. Clean the steerer tube using isopropyl alcohol.
2. Grease both bearings, the crown race, and the inside of the head tube as shown below.

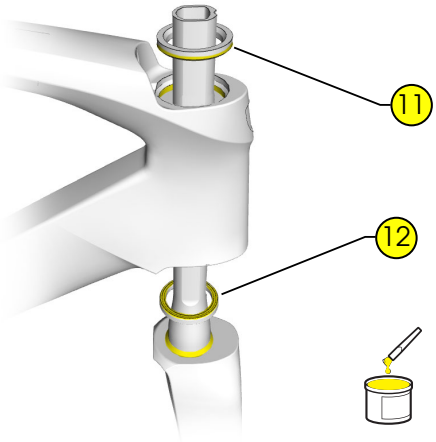


3. Insert the fork into the head tube as shown above.

   **TIP:** Support the fork with a table during the assembly.
4. Route the shift cables and brake lines through the split ring.

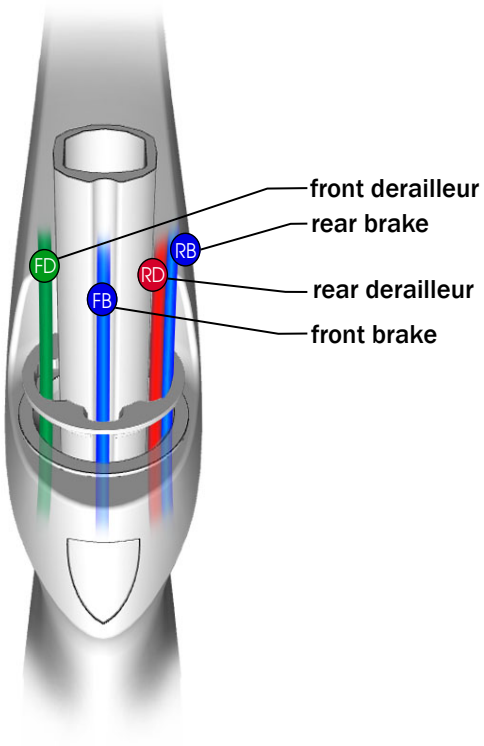


5. Assemble the headset to the stem as shown on page 5. Make sure the stem is in its final position with the required spacers underneath.
6. Cut the steerer tube 2mm above the stem.

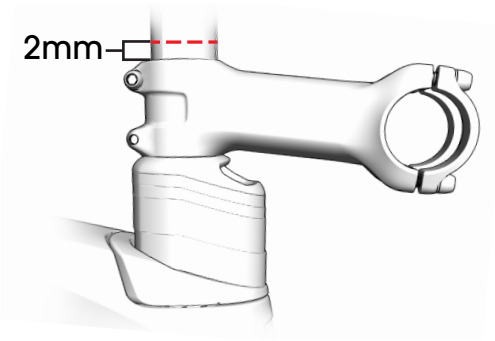


7. Assemble the rest of the headset. Do not fully tighten the expander plug.
8. Attach the handlebars and levers.
9. Tighten the expander plug screw to your desired steering stiffness.

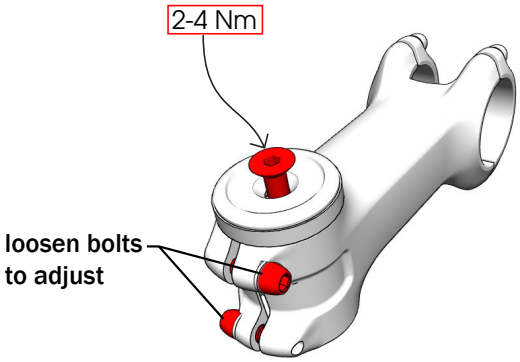

# IsoSpeed

**NOTICE:** Carefully remove the covers with a paint-safe plastic pry-bar.

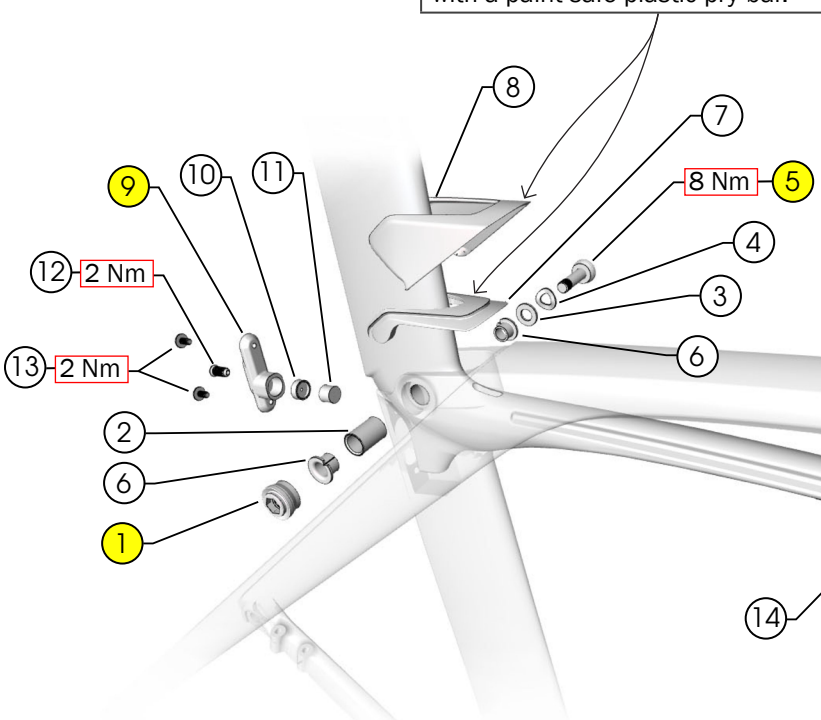


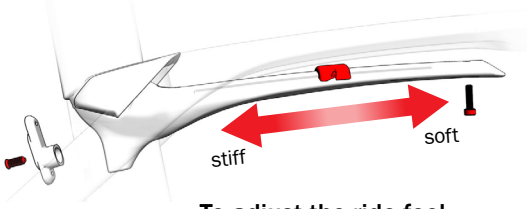


**To adjust the ride feel, loosen both bolts shown above and move the slider.**

**NOTICE:** Do not apply grease to the frame pockets. Only apply grease to the parts shown to the right.

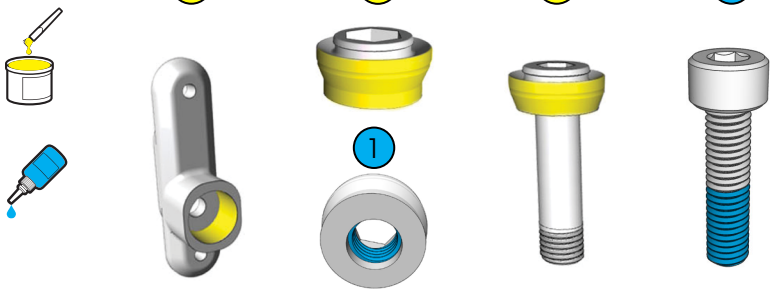


| | | |
|---|---|---|
| 1 | Nut | *kit W569265* |
| 2 | Cylindrical bushing | |
| 3 | Washer | |
| 4 | Wave washer | |
| 5 | Bolt | |
| 6 | Flanged bushing — *W561683* | |
| 7 | Internal cover — *W565904* | |
| 8 | External cover (black as shown) — *W573720* | |
| 9 | Damper carriage | *kit W564027* |
| 10 | Damper housing | |
| 11 | Damper | |
| 12 | Buttonhead screw | |
| 13 | Flathead screw | |
| 14 | Adjustment slider — *W564294* | |
| 15 | Bumper — *W598668* | |
| 16 | Bolt — *W579510* | |
| 17 | Washer — *W581552* | |

# Seatpost

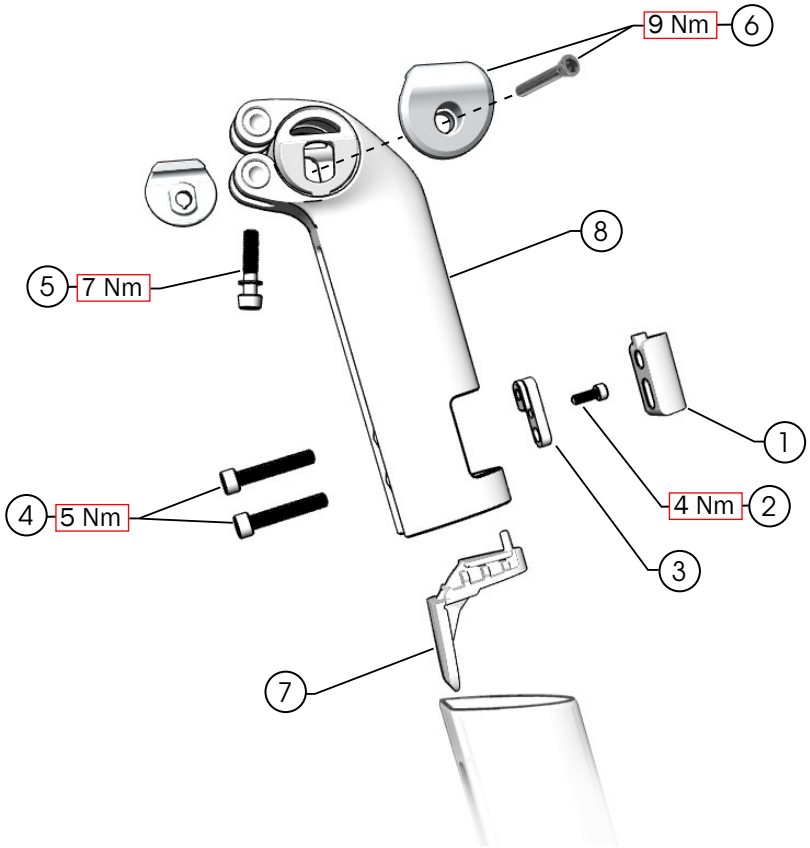


| | | |
|---|---|---|
| 1 | Wedge | *kit W574676* |
| 2 | Bolt | |
| 3 | Plate | |
| 4 | Wedge bolts | |
| 5 | Pinch bolt | |
| 6 | Pinch bolt / saddle tilt clamp ears (7x7mm) — *W524900* | |
| 7 | Seatpost tail — *W557630* | |
| 8 | Seat mast cap (dark gray as shown) — *W569842* | |