TREK



# LYNC SERVICE MANUAL

# Trek® Lync Service Information



This manual gives instructions for servicing the built-in lighting system on the Trek Lync bicycle. For basic information, please see the Lync supplement to the Trek bicycle owner's manual.

This manual is written for a person experienced in shop-level bicycle mechanics and familiar with electrical systems on bicycles.

Please save these instructions for future reference. Also check www.trekbikes.com for updates.

## Table of Contents


Foreword ..... 1
- Parts of the System ..... 1

General notes about Lithium Ion batteries and electronics ..... 2

Inspection and Maintenance ..... 3
- Battery pack ..... 3
- Dock ..... 4
- Lights ..... 6
- Control panel ..... 9
- Wires ..... 10

Recharging ..... 11

Troubleshooting ..... 12

Parts List ..... 13



® Trek is a registered trademark of the Trek Bicycle Corporation
© Copyright Trek Bicycles 2014

# Foreword

The Lync system uses a Lithium Ion battery, which is housed inside a small, compact case, or battery pack. The case can easily be removed from the bike for recharging.

## Parts of the System

A. Taillight
B. Control panel
C. Headlight
D. Dock (under battery pack)
E. Battery pack

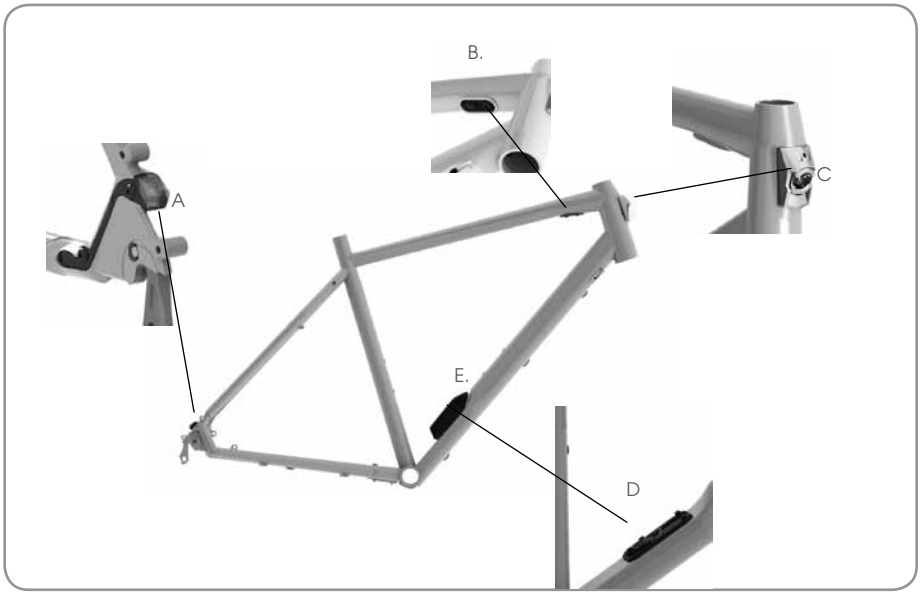


### Tools required

- 2, 2.5, and 4mm hex wrench
- Electrician's tape

## Operation

This section explains the very easy operation of the Lync lighting system.

### Switching the lights off, on, and flashing

The control panel has two buttons; the front button is for the headlight, the rear button is for the taillights. They control the light functions. Simply push a button to switch the system to ON or change modes. To switch to Off, hold the button.

- Front: High, Low, and Off
- Rear: On, Flash, and Off

If you choose to use the control panel while riding, be careful to maintain control of the bike while your hand is off the handlebar.

### Battery pack indicator light

When the battery charge is at 10% or lower, the indicator light on the battery pack (Figure 2) will show red. In addition, the headlight will start a slow-blink pattern and the taillights will flash.

# General notes about Lithium Ion batteries and electronics

**Notice: Avoid mishandling of the battery. The following actions can cause damage to or permanently disable the battery:**

- **Short-circuiting the terminals**
- **Opening or puncturing the battery pack**
- **Dropping or impacting the battery pack**
- **Immersing the battery pack in water**
- **Cleaning the battery pack with a high-pressure washer**

### Traveling with Lithium Ion batteries

With a Lithium Ion battery, certain restrictions on travel apply. If the terminals are shorted on a Lithium Ion battery, it can cause the battery to overheat and possibly cause a fire. For this reason, airlines do not allow Lithium Ion batteries in checked baggage; you must put Lithium Ion batteries in your carry-on.

### Extending the battery life

The Lync battery is a long-life system. The expected life of the battery is 300 to 400 charges. To extend the battery life, store it in a mostly-charged (not fully-charged) condition at room temperature, and avoid extreme temperatures when recharging. See the Recharging section on page 11 for more information.

### Recycling

The battery will eventually lose strength. When the charge no longer lasts as long as it should, install a new battery pack. When you do, please recycle the old battery. In the U.S., you can find out where to do this at call2recycle (http://www.call2recycle.org/).



# Inspection and Maintenance

This section explains how to inspect, service, install, and remove each component of the Lync system: battery pack, dock, headlight, taillights, control panel, and wires.

## Battery pack

The Lync system uses a Lithium Ion battery, which is housed inside a small, compact case, or battery pack (Figure 2). The battery pack can easily be removed from the bike for recharging, covered on page 11. Also see the previous page's discussion of Lithium Ion batteries.

With a full charge, the battery should power the Lync light system for about 2 hours 40 minutes at high power, or 5 hours at low power. This time will vary according to battery condition, temperature, and other environmental factors. When the battery charge is at 10% or lower, a red light will show on the battery pack. In addition, the headlight will start a slow-blink pattern and the taillights will flash.

### Inspection and Maintenance

Electricity flows best when metal meets metal, so make sure the contacts are clean. Wipe them with your finger, a pencil eraser, or a damp soft cloth.

If after recharging, the battery does not work, replace the battery pack. Do not attempt to open the battery pack.

If you find a problem with the system, see the Troubleshooting section, page 12.

### *To remove*

1. Push and hold the latch (Figure 2) while you slide the battery pack forward about 5mm (1/8") (Figure 3).
2. Lift the battery pack away from the dock (Figure 4).

### *To install*

1. Make sure the battery pack and dock are clean. If required, wipe the contacts with a damp cloth, fingertip, or pencil eraser.
2. Place the battery pack flat on the dock in position for installation (Figure 3) so that the hooks are aligned for engagement.
3. Slide the battery pack along the dock until the latch locks the battery pack into place.
   You should hear a 'click' when the latch engages. The indicator light will illuminate for about three seconds, and the front and taillights will flash momentarily.



Figure 2. Battery pack installed on dock

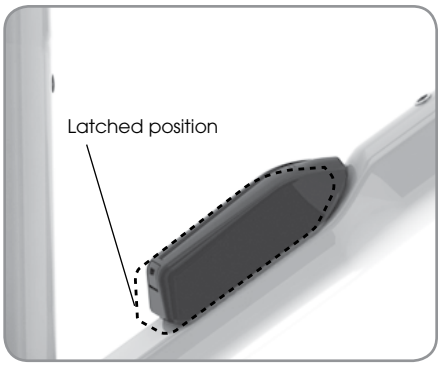

Figure 3. Battery pack in position for removal or installation

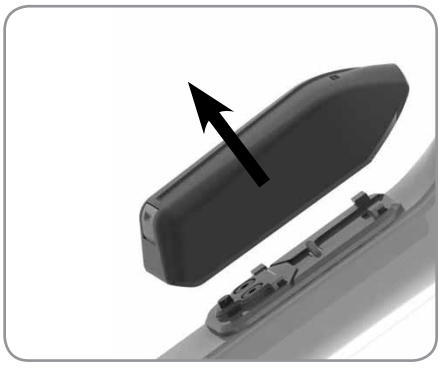
Figure 4. Lifting battery pack away from dock

# Dock

The dock is located on the down tube, near the bottom bracket (Figure 5). It holds the battery pack. The dock is connected to the lights and control panel by wires that are routed inside the frame. The wires disconnect at the dock; each is permanently attached to its individual component.

When the battery pack is not attached, the dock cover (Figure 6) should be attached to the dock to protect the contacts.



Figure 5. Dock on down tube



Figure 6. Dock cover

### Inspection and Maintenance

Electricity flows best when metal meets metal, so make sure the electrical contacts on the dock are clean. Wipe them with your finger, a pencil eraser, or a damp soft cloth.

Make sure the dock is securely attached to the frame. Tighten the two mounting screws to 1.4 Nm.

*To remove*

1. Remove the two attachment screws (Figure 7).
2. Slide the dock a few millimeters toward the bottom bracket until the mounting hook disengages (Figure 8), then lift it straight off the frame.
3. Disconnect the wires (Figure 7) from the back of the dock. Depress the connector latch (Figure 9) with a screwdriver and pull the plastic head of the connector straight out; do not pull on the wires. For more info about the connector, see the Wires section on the following pages.
4. Secure the wires to the outside of the frame with electrician's tape so that they do not fall into the frame.

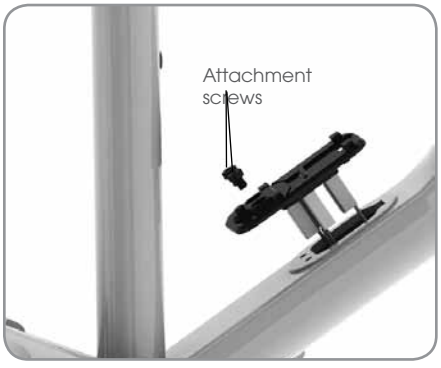


Figure 7. Dock exploded

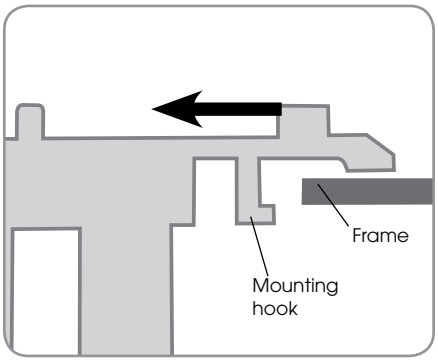


Figure 8. Dock mounting hook disengaged

*To install*

1. Connect the wires to the dock. Push each wire connector (Figure 9) straight onto its post. When a connection engages, you should hear a soft 'click'. Each connector has a specific number of pins, so will only fit in the correct place. However, to make connection quicker, see the wiring diagram, Figure 10.
2. Inspect the lights. If any light does not function correctly, see Troubleshooting on page 12.
3. Guide the wires back into the frame as you gently set the dock in place.
4. Slide the dock up the frame a few millimeters to engage the dock mounting hook
   (Figure 11).
5. Align the mounting holes with the down tube of the frame, and insert the two attachment screws (Figure 12). Tighten to 1.4 Nm.

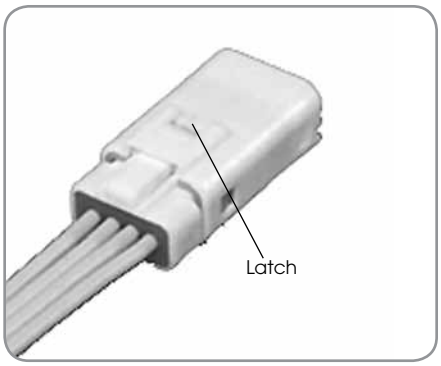

Figure 9. Connector

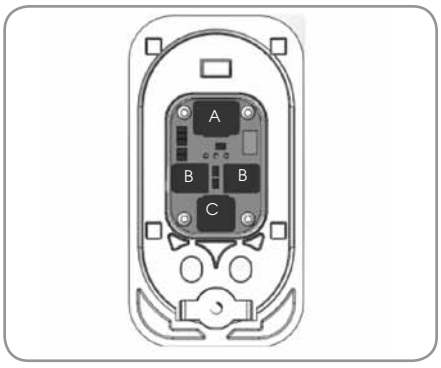

Figure 10. Wiring diagram (underside of dock)
A. Headlight
B. Taillights
C. Control panel

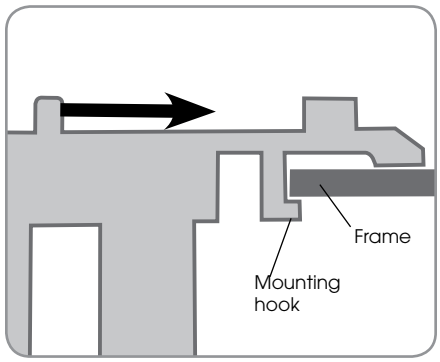

Figure 11. Dock mounting hook engaged

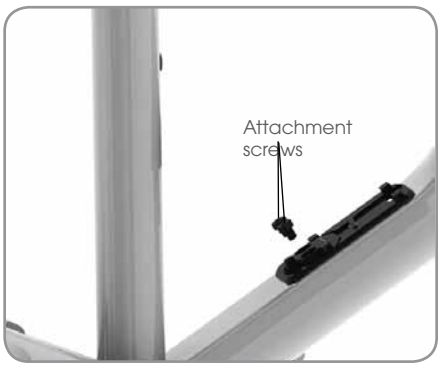

Figure 12. Dock exploded

# Lights

The lighting system on the Lync is a "To See" system, intended to work as a headlight in low-visibility situations. The high-output LEDs (Light Emitting Diodes) provide a bright 550 lumens headlight in a focused pattern to illuminate the road ahead. The taillights (two) are 3 lumens each.

The headlight of the Lync system is in the head tube (Figure 13). There are two taillights: one is located in each of the rear dropouts (see Figure 19, page 8). The Lync system lights use LEDs, so there are no bulbs to burn out.

### Inspection and Maintenance

Make sure that the headlight and both taillights function correctly. If any of the lights malfunction, follow the steps in the Troubleshooting section.

### To adjust the angle of the headlight beam

The angle of the headlight can be adjusted with a small screw located just above the headlight (Figure 13) and accessible through the shroud. Do not turn the screw past the stop; overtightening can damage the bracket.

### To remove and install the headlight

The headlight is permanently attached to its wire, and is housed in the head tube.

This is a simple procedure after the fork is removed.

*To remove*

1. Disconnect the headlight wire from the dock (see page 4).
2. Remove the fork.
3. Loosen and remove the two screws inside the head tube that hold the shroud (Figure 14), and remove the shroud.
4. While holding the centering spring (inside the head tube), remove the angle adjusting screw from the outside of the frame.
5. Remove the headlight from the frame. Gently ease out the wire, which is permanently attached to the headlight (Figure 15).



Figure 13 Headlight exploded

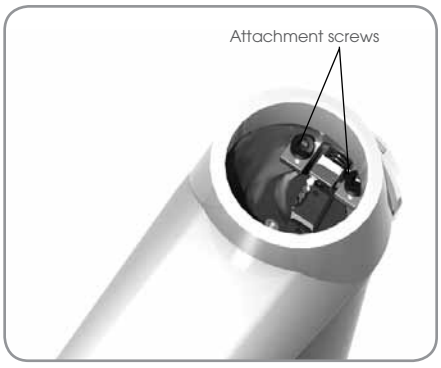

Figure 14. Headlight fasteners


Figure 15. Headlight with wire

*To install*

1. Pass the headlight wire through the opening in the head tube and out of the top of the head tube.
2. Tilt the headlight so that the headlight tab is tilted back (Figure 16).
3. Slide the headlight tab into the head tube and align the mounting holes.
4. Insert the adjusting screw through the head tube, then through the spring, and then thread the screw into the headlight tab until the end of the screw is flush with the back of the tab. Do not overtighten the screw; the spring may can be crushed and the screw will be hard to access for adjustment.
5. Place the shroud over the headlight with the shroud tabs inserted through the head tube slots (Figure 17). From inside the head tube, insert the two attachment screws (Figure 18).
6. Gently feed the wire back into the head tube and then down the down tube. Connect the wire to the dock.
7. Inspect the lights. If any light does not function correctly, see Troubleshooting on page 12.
8. Press the headlight and control panel wires to the side of the head tube and install the fork.
9. Adjust the angle of the headlight beam.

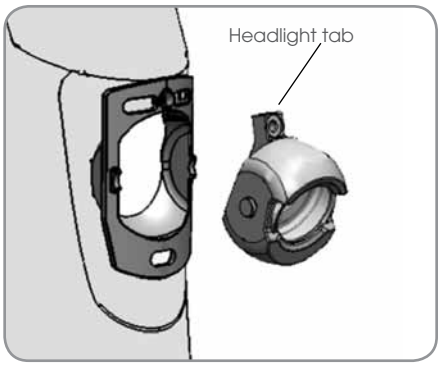

Figure 16. Headlight tilted down

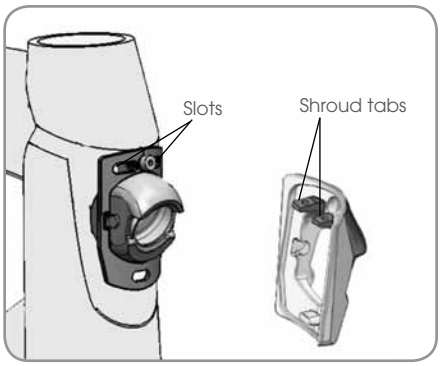

Figure 17. Shroud tabs and head tube slots

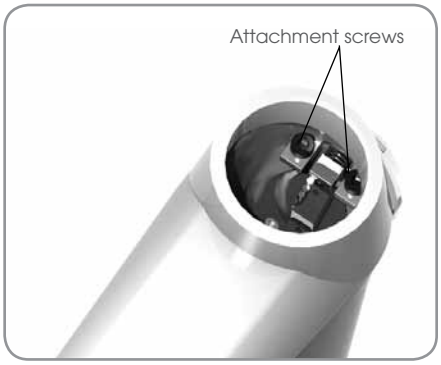

Figure 18. Headlight fasteners

**To remove and install a taillight**

Each taillight is permanently connected to its wire, and is part of its dropout (Figure 19). Each wire cover is attached by two screws with thread locker. A rubber gasket seals the taillight to the dropout. The left and right taillights are slightly different, but the procedure is the same for both.



Figure 19. Taillight

### *To remove*

1. Disconnect the wire from the dock (see page 4).
2. Remove the rear wheel, crankset, and bottom bracket.
3. Remove the threaded fasteners attaching the wire cover (Figure 20).
4. Gently pull the taillight out of the frame and ease out the permanently-attached wire (Figure 21).

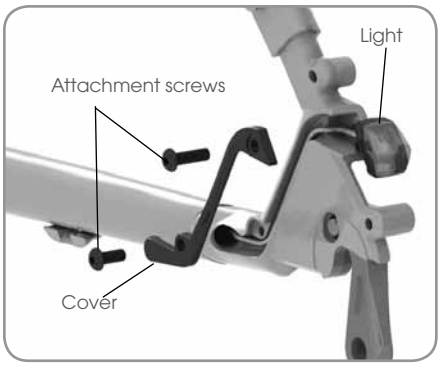


Figure 20. Rear drive-side light exploded

### *To install*

1. With the bottom bracket removed from the frame, pass the wire from the rear dropout through the chainstay and up the down tube until it exits the frame through the dock port.
2. Place the wire in the dropout, and install the shorter screw through the cover attachment hole that is closest to the bottom bracket.
3. Align the taillight gasket and install the taillight. Hold the wire cover in place as you install the light and be careful not to pinch the gasket. After the taillight is in place, install the second, longer attachment screw.
4. Connect the wire to the dock.
5. Inspect the lights. If any light does not function correctly, see Troubleshooting on page 12.
6. Insert the crankset and rear wheel. Both taillight wires go above the bottom bracket.



Figure 21. Taillight with wire

## Control panel

The control panel is located under the top tube, just behind head tube (Figure 22). The control panel is permanently attached to its wire, which goes down the head tube and proceeds down the down tube to the dock. The control panel is attached with two screws with threadlocker.



Figure 22. Control panel

### Inspection and Maintenance

Check that the panel is securely attached to the frame. Tighten the attachment screws (Figure 23) to 0.7 Nm.

Check that all lights function correctly. If any light does not, see Troubleshooting on page 12

### Removal and Installation

#### *To remove*

1. Disconnect the wire from the dock (see page 4).
2. Remove the fork.
3. Remove the attachment screws (Figure 23).
3. Gently pull the control panel out of the frame and ease out the wire, which is permanently attached (Figure 24).

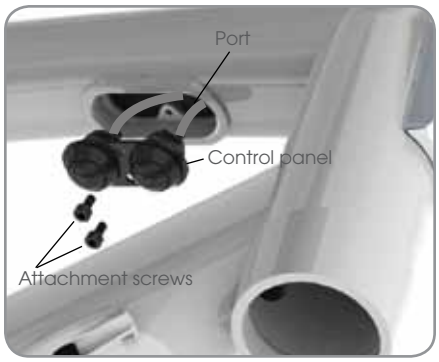


Figure 23. Control panel exploded

#### *To install*

1. With the fork removed from the frame, pass the wire from the control panel port through the frame and connect the wire to the dock.
2. Gently tuck extra wire through the control panel port, and install the control panel with the white wire toward the front of the bicycle.
3. Install the attachment screws and tighten to 0.7 Nm.
4. Inspect the lights. If any light does not function correctly, see Troubleshooting on page 12
5. Install the fork.



Figure 24. Control panel with wire

## Wires

There are four wires, each permanently attached to its component: headlight (Figure 27), control panel (Figure 28), and two taillights (one shown in Figure 29). Each wire runs through the frame and is connected to the back of the dock (Figure 25) with a plastic connector (Figure 26).

The wires use a simple plug-and-snap connector. To disengage a connector, depress the connector latch (Figure 26) with a screwdriver and pull the plastic head of the connector straight out; do not pull on the wires.

To connect, simply press the plug into the socket until you hear a slight `click'.

### Removal and Installation

Each wire is permanently attached to its component, so to replace a wire you have to replace the component. Simply follow the removal and installation procedures for the component.



Figure 25. Wire connections to dock

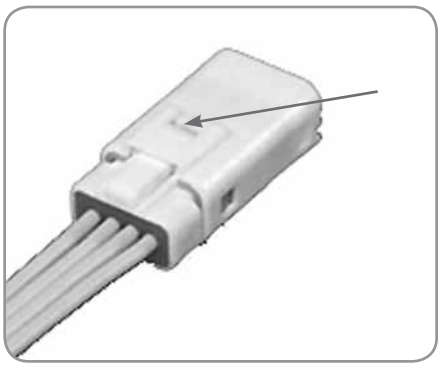

Figure 26. Latch on connector



Figure 27. Headlight with wire



Figure 28. Control panel with wire



Figure 29. Taillight with wire

# Recharging

This section explains about recharging the battery on the Lync system.

For best results, recharge the battery at room temperature. Recharging the battery at extremes of temperature can result in less than a full charge. Also avoid moisture when recharging. It is best to do so inside your home or office.

### To recharge the battery

1. Remove the battery from the dock.
2. Plug your computer to a power source.
3. Connect the battery pack to the computer with the supplied micro-USB cord. To access the port on the battery pack, lift the cover (Figure 30).

Note: There is no data exchanged with the computer.

**⚠ CAUTION: During charging, the battery can get hot, reaching a temperature of 40°C/104°F.**

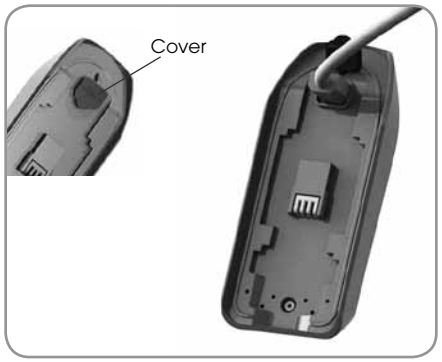


Figure 30. USB port cover on underside of battery pack, and connected to micro-USB cable

### Time required

With a completely empty battery, it takes about 6 hours to achieve a full charge.

When using a USB hub, charging may be slow. In that case, connect the USB cable directly to a computer's USB port or use a USB wall charger.

### Indicator lights while charging

While charging, the battery pack indicator light is red. When the battery pack has a full charge, the indicator light changes to green.

# Troubleshooting

Follow these flow charts or instructions when a bike has problems.

### Battery won't recharge

Replace the battery.

### Lights won't switch off

Replace the control panel.

### Light won't switch on

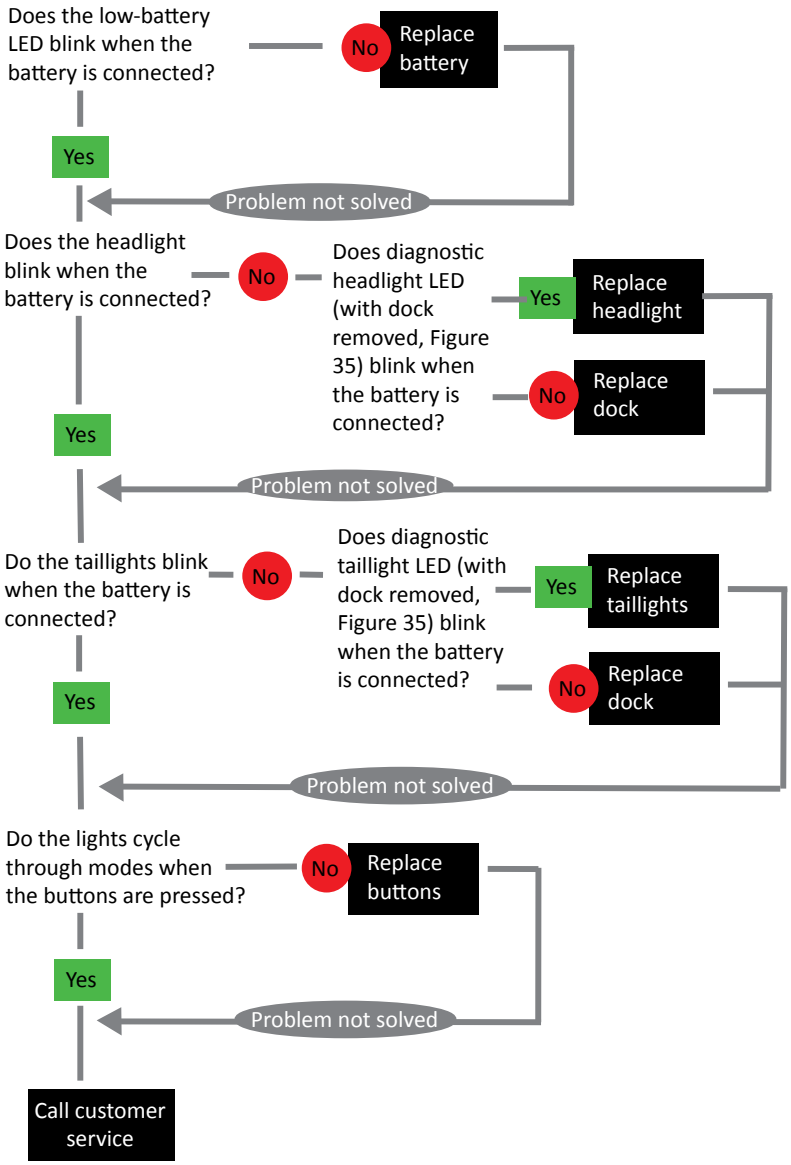


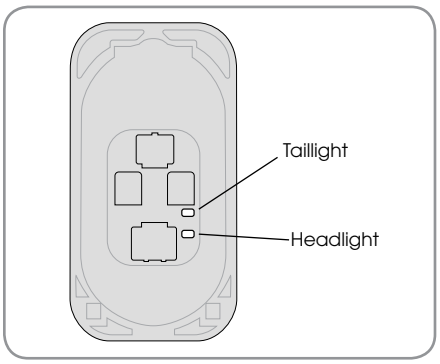


Figure 31. Diagnostic lights on underside of the dock
Note: Wired must be connected for diagnostic lights to function

# Parts Names

| # | Item name |
|---|---|
| **Headlight** | |
| A | Attachment screws |
| B | Centering spring |
| C | Angle adjusting screw |
| D | Headlight with wire |
| E | Shroud |
| **Taillight, drive side** | |
| F | Taillight with wire |
| G | Gasket |
| H | Cover |
| I | Attachment screws |
| **Taillight, non-drive side** | |
| F | Taillight with wire |
| G | Gasket |
| J | Cover |
| I | Attachment screws |
| **Dock** | |
| K | Dock |
| L | Attachment screws |
| M | Dock cover |
| **Control panel** | |
| N | Control panel with wire |
| O | Attachment screws |
| P | Battery pack |
| Q | Charging cable |

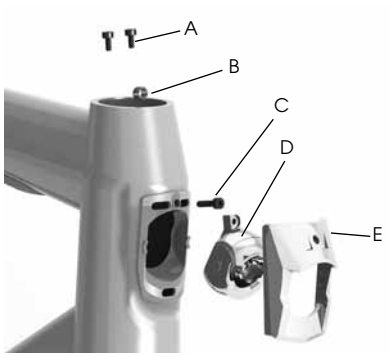


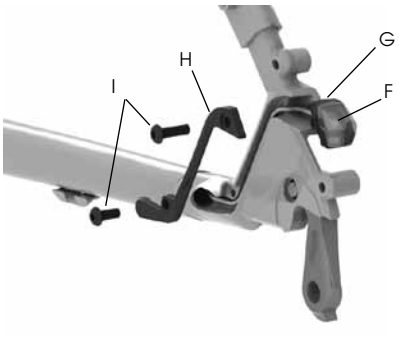


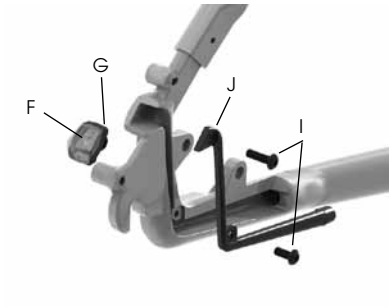


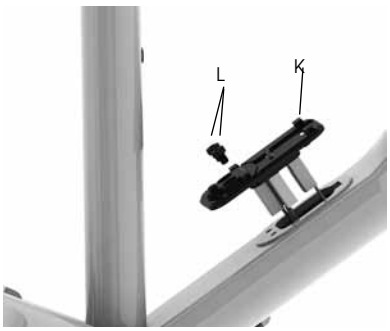


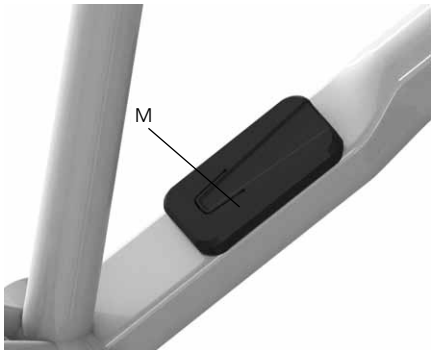





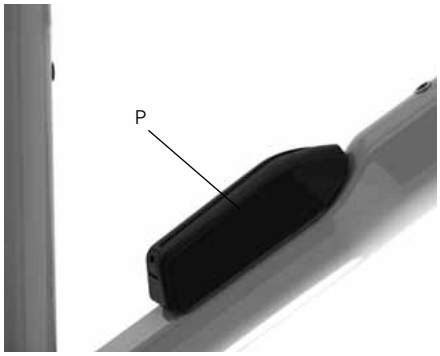


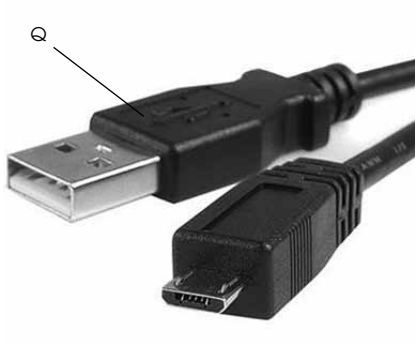

TREK

