

31.6 & 34.9 GEN 3 LINE DROPPER SEATPOST

SERVICE MANUAL

August 2024

Contents

Parts list	2
Install the travel reducer	3
Service the dropper post	4-7
Replace the cartridge	8
Install the dropper post	9-10
Troubleshooting	11
Measurements diagram	12

About this manual

Clamping in a repair stand

Only clamp the dropper post in the upper part of the lower tube in a repair stand.

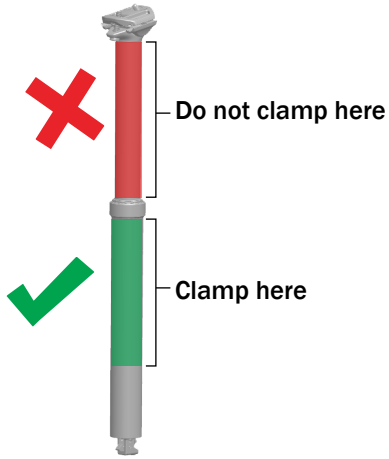

Replacement parts

Trek recommends using only Trek OEM (original equipment manufacturer) replacement parts.

Collar bolt tightening

NOTICE: Tighten the collar bolt to the lower range listed on the seatpost collar or 6Nm — whichever is lower. Tightening the collar bolt to a higher torque can reduce the return speed of the dropper post or prevent movement.

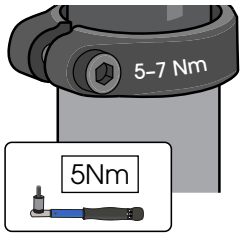

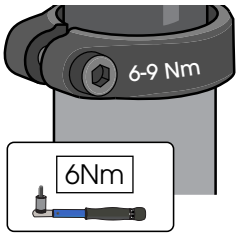

Legend

Nm Torque value



Apply appropriate grease

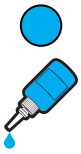

Apply appropriate threadlocker

Safety

WARNING

Properly tighten hardware

Always tighten hardware to the specified torque. Over-tightening hardware could deform or break the hardware or components. Under-tightening hardware could cause hardware or components to become loose. Either situation could damage the bicycle and result in injury to the rider.

WARNING

Reapply threadlocker

All reused-fasteners with pre-applied threadlocker must be cleaned with isopropyl alcohol and have new thread-locker applied before re-assembly. If threadlocker is not applied, the fasteners may loosen which could damage the bicycle and result in injury to the rider.

Parts list

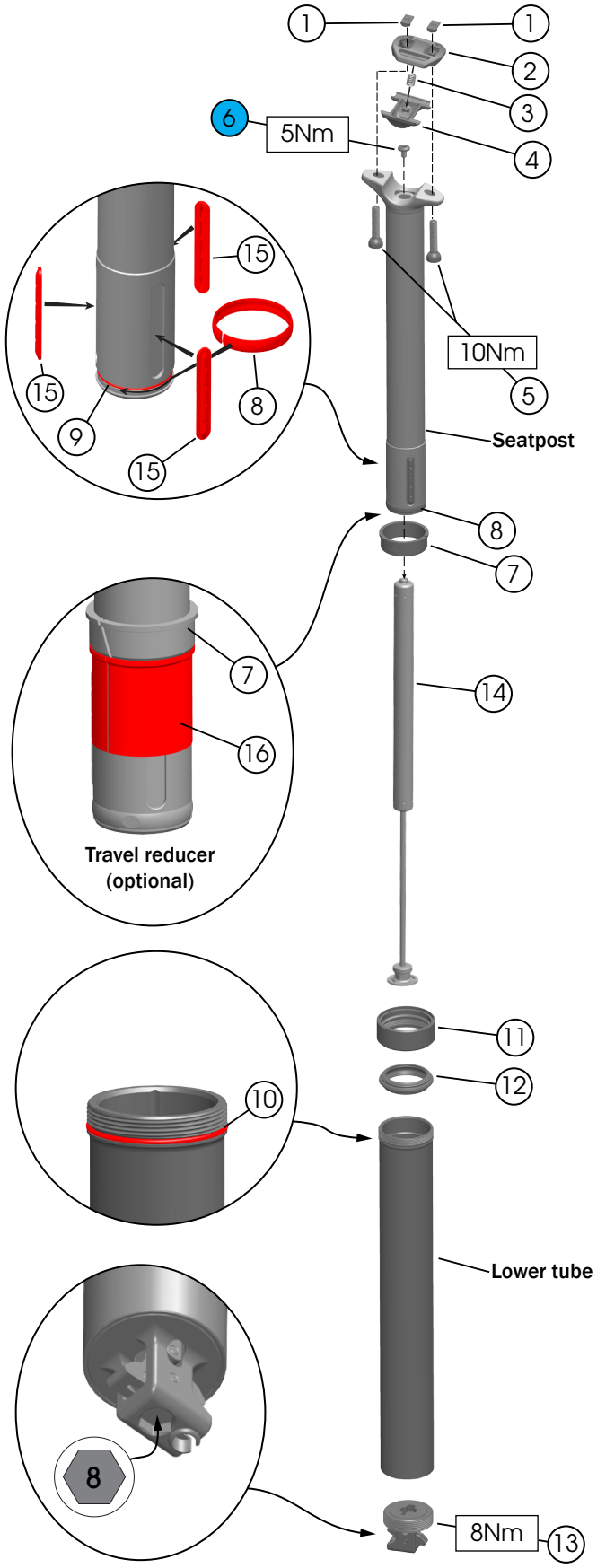

		31.6	34.9
1	T-nuts		
2	Upper saddle plate		
3	Spring	5316446	5316446
4	Lower saddle plate		
5	Saddle rail bolts		
6	Cartridge bolt (M6)	W5284053	W5284053
7	Upper bushing		
8	Lower bushing		
9	Lower bushing O-ring	5316593	5316453
10	Lockring O-ring		
11	Lockring collar		
12	Dust seal	W5298318	W5284046
13	Actuator	5316592	5316447
14	Cartridge 100mm	W5317369	W5308927
	Cartridge 150mm	W5317370	W5308928
	Cartridge 170mm	W5317371	W5308929
15	Keys	5316451	5316451
16	Travel reducer 10mm	W5314648	W597161
	Travel reducer 30mm	W5314649	W597162

Install the travel reducer (optional)

There are two travel reducers available — 30mm and 10mm. A travel reducer raises the lowest point the seatpost will reach.

NOTE: Travel reducers are not stackable and you cannot replace them with a headset spacer.

1. Lower the dropper post 50%.

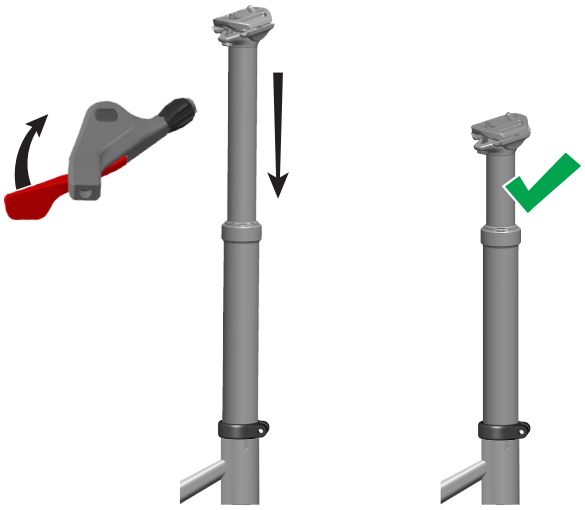

2. Loosen the lockring collar and raise it up the seatpost.

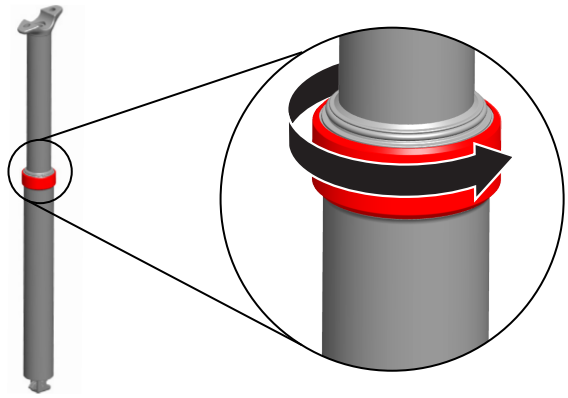

3. Raise the upper bushing and wrap the travel reducer around the seatpost.

   TIP: You may need to raise the seatpost so you have enough room.

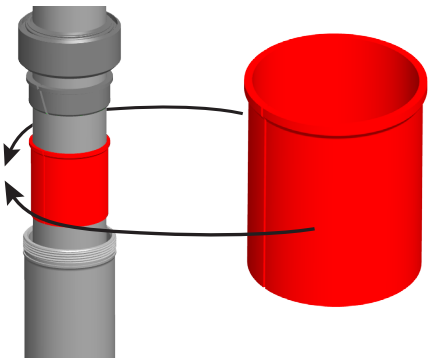

4. Slide the travel reducer and upper bushing into the lower tube.

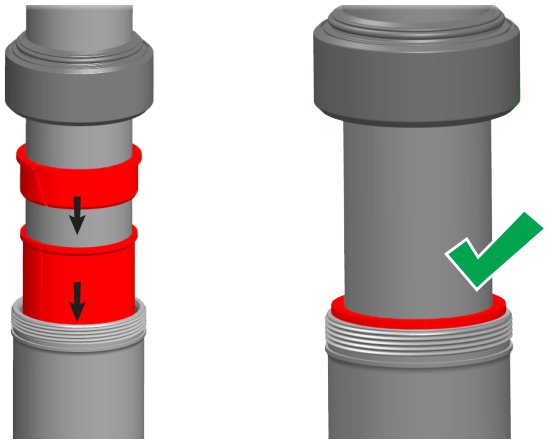

5. Tighten the lockring collar.

   TIP: Use anti-slip gloves for a better grip when tightening.

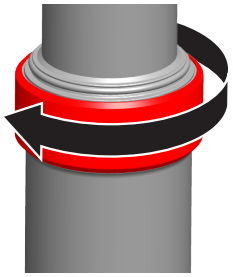

Service the dropper post

Clean and regrease — clean and regrease sliding surfaces at least twice a year.

Full service — replace the parts shown below at least once every two years (more frequently with heavier use). Full service-only steps are noted in the procedure below.

Replacement parts

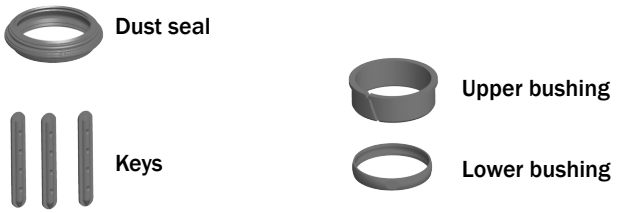

TIP: Before disassembling the dropper post, record the seat height.

1. Loosen the seatpost clamp bolt and pull the dropper post up. Remove the cable from the actuator housing.

   TIP: If there is not enough slack in the cable, you may need to remove the lever and feed the housing back through the frame.

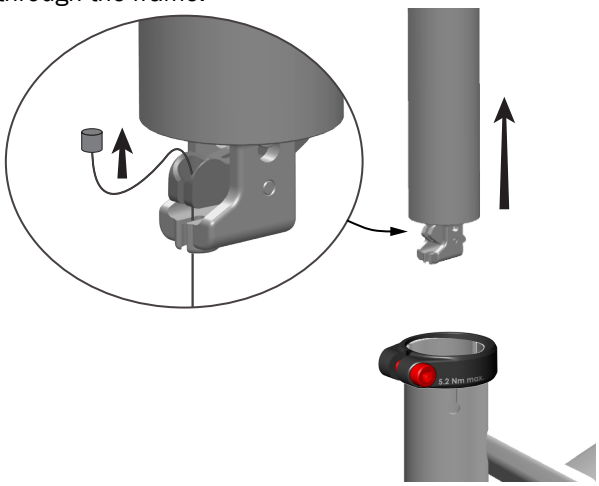

2. Remove the saddle clamp bolts and saddle.

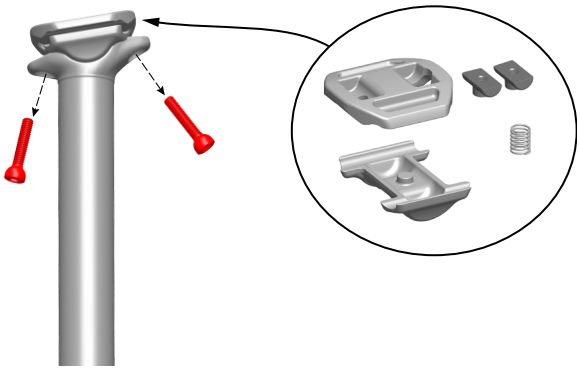

3. Remove the actuator housing.

   TIP: Wear gloves to grip the lower tube better.

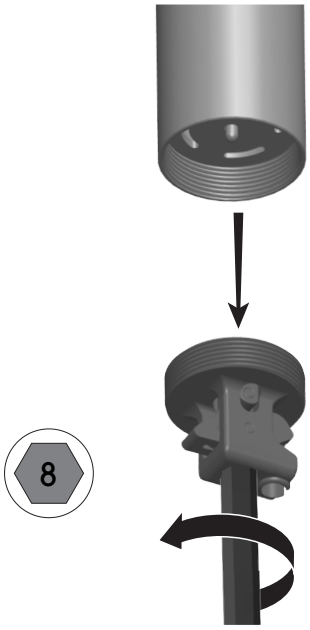

4. Remove the cartridge mount bolt and pull out the cartridge.

   NOTICE: Be careful not to drop the cartridge. After you remove the bolt, the cartridge can fall out.

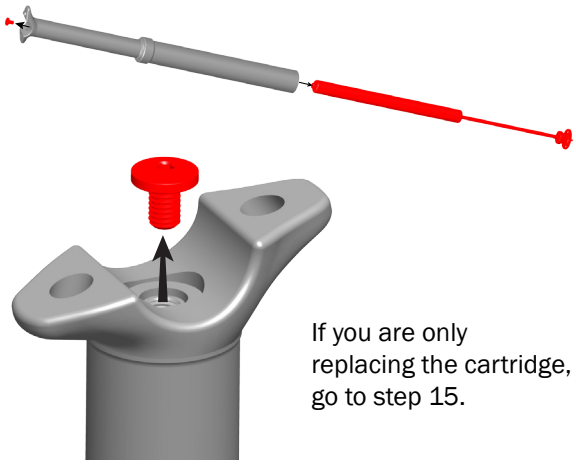

If you are only replacing the cartridge, go to step 15.

Service the dropper post (continued)

5. Loosen the lockring collar and remove the lower tube.

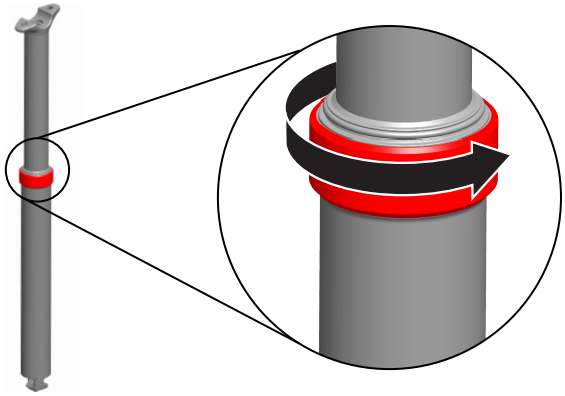

If you are not performing a full service, wipe the grease off all surfaces and clean surfaces using isopropyl alcohol. Go to step 12.

6. (FULL SERVICE ONLY) Slide the lockring collar up the seatpost and remove the parts shown below.

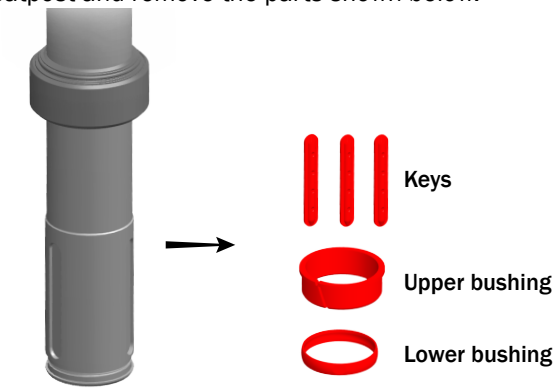

7. (FULL SERVICE ONLY) Remove the dust seal as follows.
   a. Slide the lockring collar to the lowest end of the seatpost and thread it onto the lower tube.
   b. Tilt the lower tube to detach the dust seal from the locking collar.
   c. Remove the dust seal.

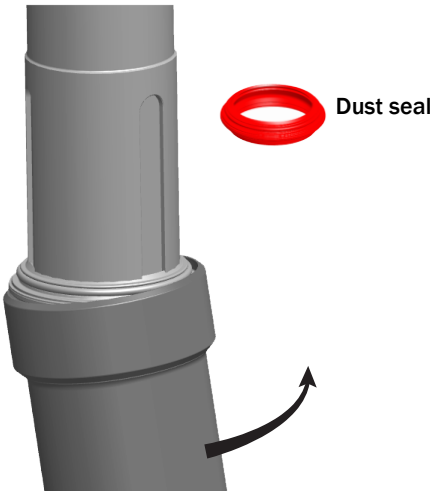

8. (FULL SERVICE ONLY) Wipe the grease off all surfaces (including the inside of the lower tube). Use isopropyl alcohol to clean surfaces.

9. (FULL SERVICE ONLY) Grease inside the new dust seal and slide it onto the lower part of the seatpost.

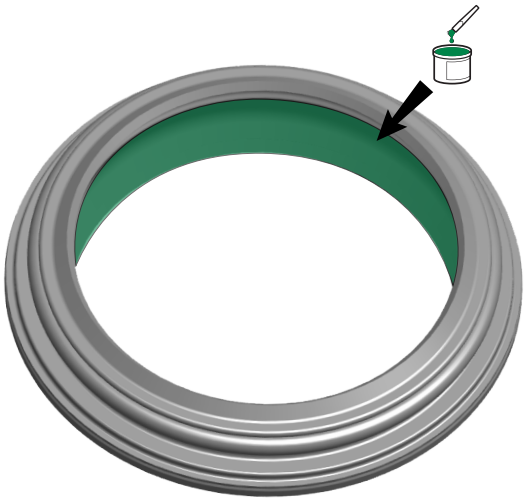

Service the dropper post (continued)

10. (FULL SERVICE ONLY) Insert the seatpost with the dust seal into the lockring collar on the lower tube. Unthread the lockring collar from the lower tube and slide it up the seatpost.

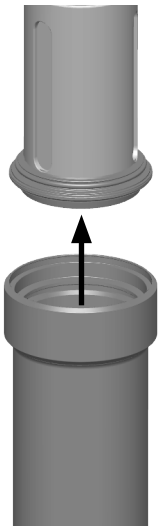

11. (FULL SERVICE ONLY) Reinstall the keys and upper and lower bushings.

12. Grease the seatpost and lower tube sliding surfaces with a thick coat of grease.

    TIP: Move the upper bushing up and down to make sure you didn't miss any spots.

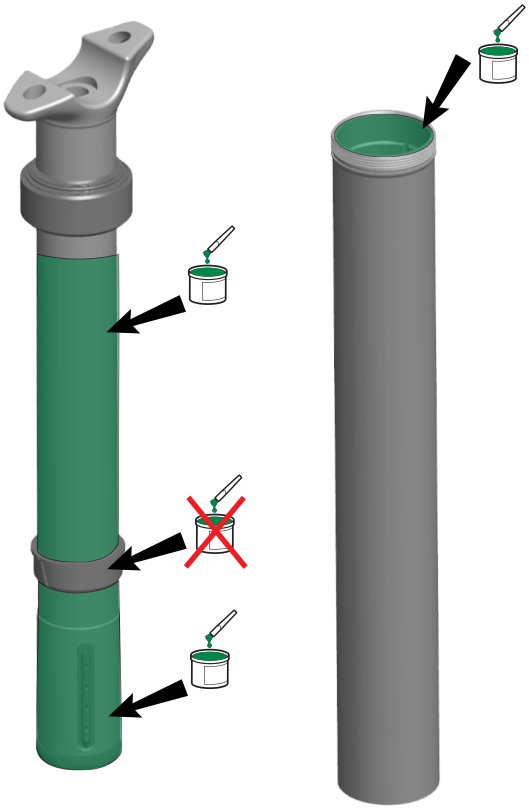

Service the dropper post (continued)

13. Slide the seatpost into the lower tube — with the QR code facing backwards — through the three key hole grooves in the lower tube.

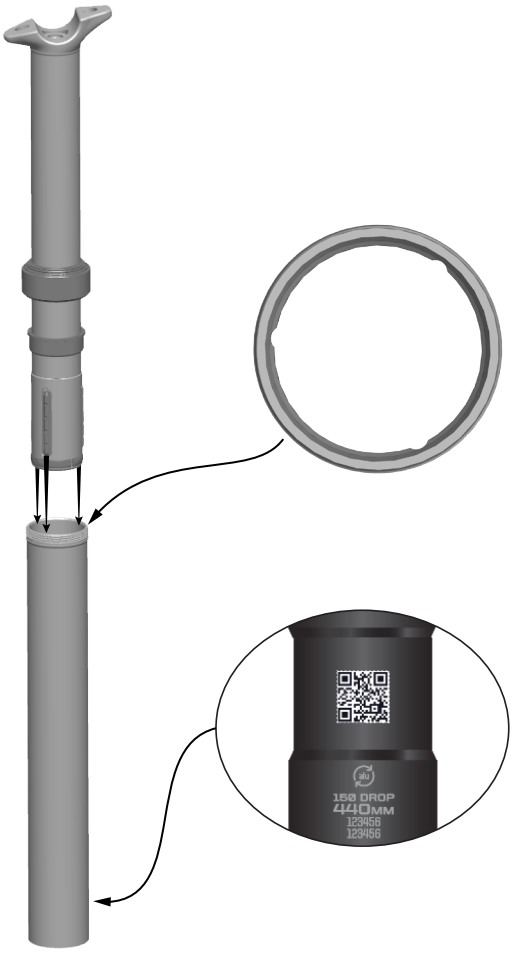

14. Tighten the lockring collar.

    TIP: Use anti-slip gloves to get a better grip when tightening.

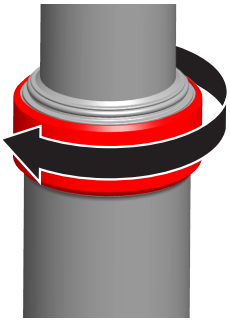

15. Insert the cartridge and align the D shape inside the seatpost.

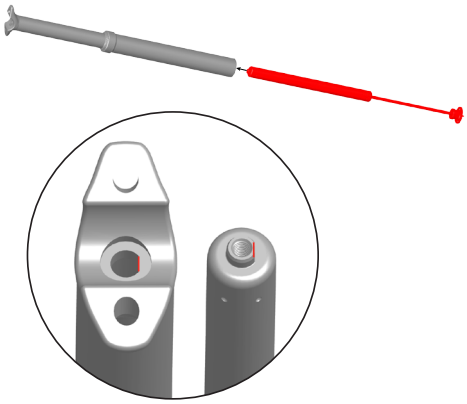

16. Install the actuator and torque to 8Nm.

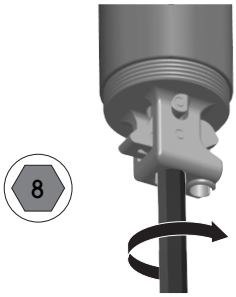

17. Install the cartridge bolt and torque to 5Nm.

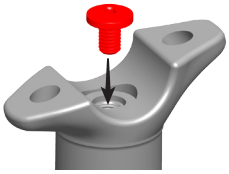

18. Reinstall the saddle clamp bolts and saddle.

19. Reconnect the cable to the actuator and reinstall the dropper post.

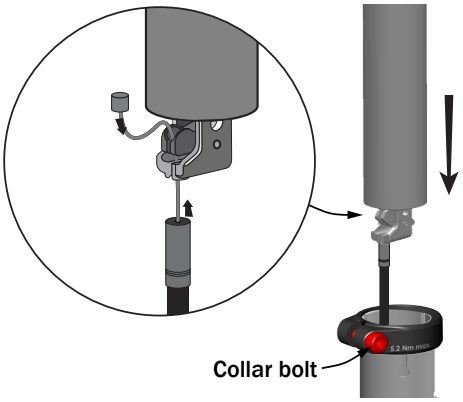

Replace the cartridge

Over time, the cartridge will lose its stability and you will need to replace it.

1. Follow steps 1-4 in the Service the dropper post section to remove the cartridge.
2. Reinstall the cartridge following steps 15-19 in the Service the dropper post section.

Install the dropper post

The procedure below shows how to route and install the dropper post in an internally routed frame. The route of the housing and cable may be different on your bike. Measure lengths appropriately.

NOTE: The housing length for a dropper post will change depending on where the saddle height is set. The lower the seatpost is in the frame, the shorter the distance the housing must travel.

TIP: Use a sprint stand instead of a repair stand.

1. Feed the housing through the drive side of the frame front-to-back. Attach a ferrule to the housing at the seatpost end.

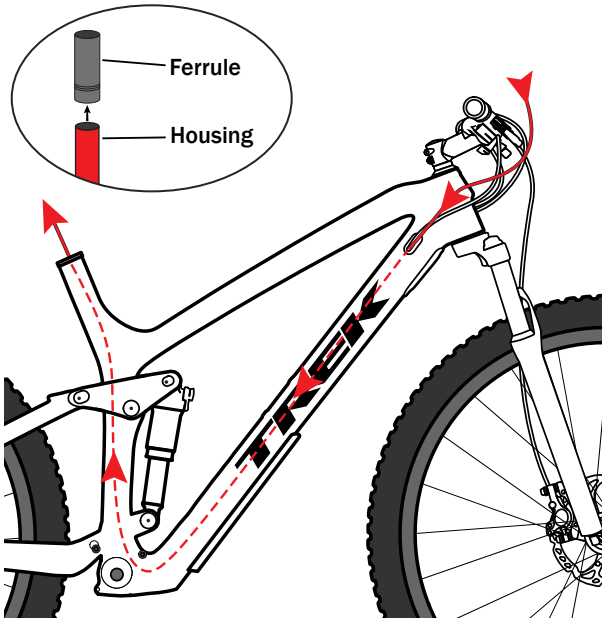

2. Feed the cable through the housing back-to-front. Attach the cable and housing to the actuator.

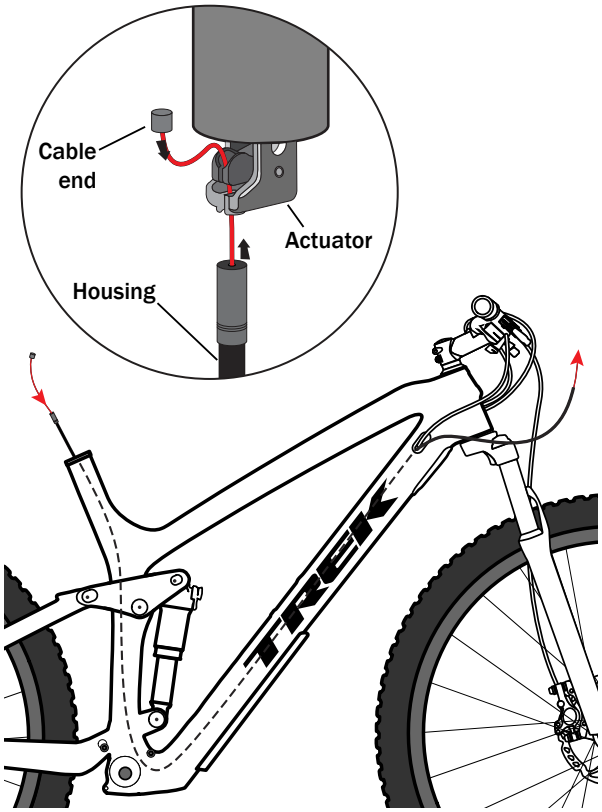

3. Install the dropper post in the seat tube at the minimum insertion line.

   NOTE: If you are going to install the dropper post much lower than the minimum insertion line, you should account for that so you don't have too much slack in the housing — this may hinder the cable.

Install the dropper post (continued)

4. Turn the handlebar all the way to the non-drive side and hold the housing where it will attach to the lever. Mark your cut line — make sure you provide enough slack.

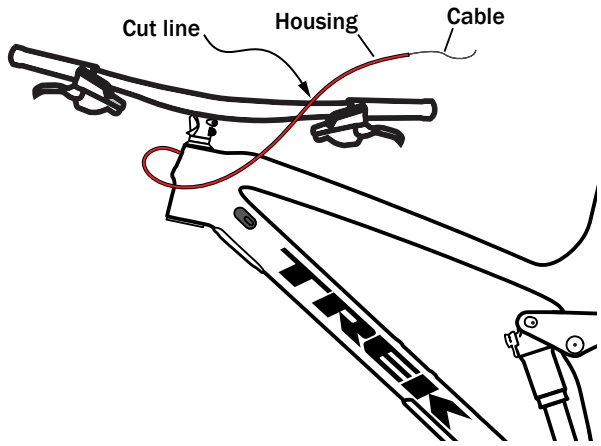

5. Remove the dropper post and pull the cable back through the housing (so you don't cut it). Cut the housing at your cut line.
6. Attach a ferrule to the housing by the handlebar.
7. Attach the housing and cable to the actuator and install the dropper post.
8. Attach the housing and cable to the lever. Tighten the cable fixing bolt.

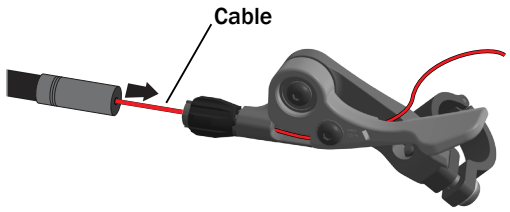

9. Attach the lever to the handlebar and adjust the cable tension. Cut the cable and crimp an end cap on the end of the cable.

   TIP: Pull the lever a few times to make sure the ferrule is properly seated.

   TIP: Lower the dropper post into the seat tube for more slack.

Troubleshooting

ISSUE: Pressing the lever does not lower the dropper post.

SOLUTION #1: Turn the barrel adjuster on the lever counterclockwise to increase cable tension.

SOLUTION #2: Replace the cable and housing (see Install the dropper post).

ISSUE: The post will not maintain its height and lowers during riding.

SOLUTION: Replace the cartridge (see Replace the cartridge).

ISSUE: The seatpost has excessive movement forward and backward or side to side.

SOLUTION #1: Torque the collar bolt to 6Nm or the minimum torque value listed on the seatpost collar (whichever is lower).

SOLUTION #2: Replace the bushings (see Service the dropper post).

SOLUTION #3: Perform a complete service overhaul and replace the bushings (see Service the dropper post).

ISSUE: The seatpost has excessive rotational movement.

SOLUTION #1: Torque the seatpost collar bolt to 6Nm or the minimum torque value listed on the seatpost collar (whichever is lower).

SOLUTION #2: Replace the keys.

SOLUTION #3: Perform a complete service overhaul and replace the bushings (see Service the dropper post).

Measurements diagram

The measurements below apply to the 31.6 and the 34.9 dropper posts.

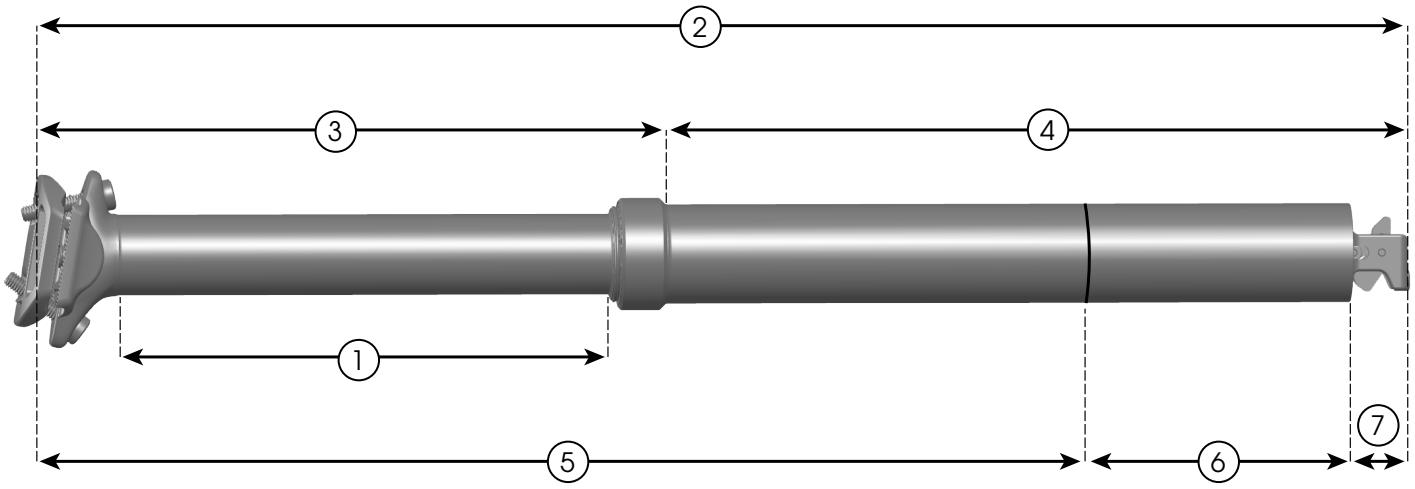

All measurements below are in millimeters (mm).

①	②	③	④	⑤	⑥	⑦
Travel	Total length	Height at max insertion	Max insertion	Max extension	Minimum insertion	Actuator length
100	331	142.4	188.6	240	70	21
150	431	192.4	238.6	330	80	21
170	475	212.4	262.6	364	90	21
200	539	242.4	296.6	368	150	21

