KIDS'

QUICK ASSEMBLY GUIDE



TREK

WARNING: Failure to follow the assembly instructions outlined in this guide could lead to an accident, which could cause serious injury or death.

IMPORTANT: This assembly guide is not a replacement for the Trek Owner's Manual or other instructions required for your bicycle. The Trek Owner's Manual contains essential safety information that you must read and understand before riding your new bike. The manual is included in the box and can also be found at trekbikes.com/manuals.

WARNING: You add to the risk of injury if you use your bicycle in an incorrect manner. Misuse can add stress to the bike and cause the frame or components to break. To decrease your risk of injury, use the bicycle in the manner for which it was designed (see the "Use conditions & weight limits" section in the Trek Owner's Manual).

To see the guide and watch the assembly video, use this QR code:
trekbikes.com/how-to-assemble-bike > Kids' bikes

If you are unsure about the final assembly, take your bike to a Trek retailer for an assembly inspection before riding.

WARNING: Use only hardware supplied by Trek to complete the assembly of the bicycle.

1 Remove the tools from the tool box.



L-wrench

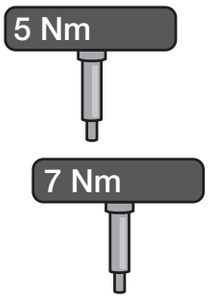

Torque wrenches



Pedal grease

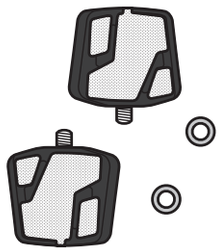

Pedals and washers (if included)

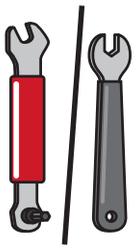

Pedal wrench

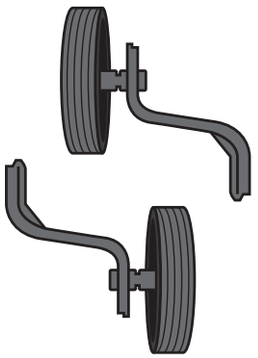

Training wheels (if included)



Manuals

You can also find the manuals online at trekbikes.com/manuals.

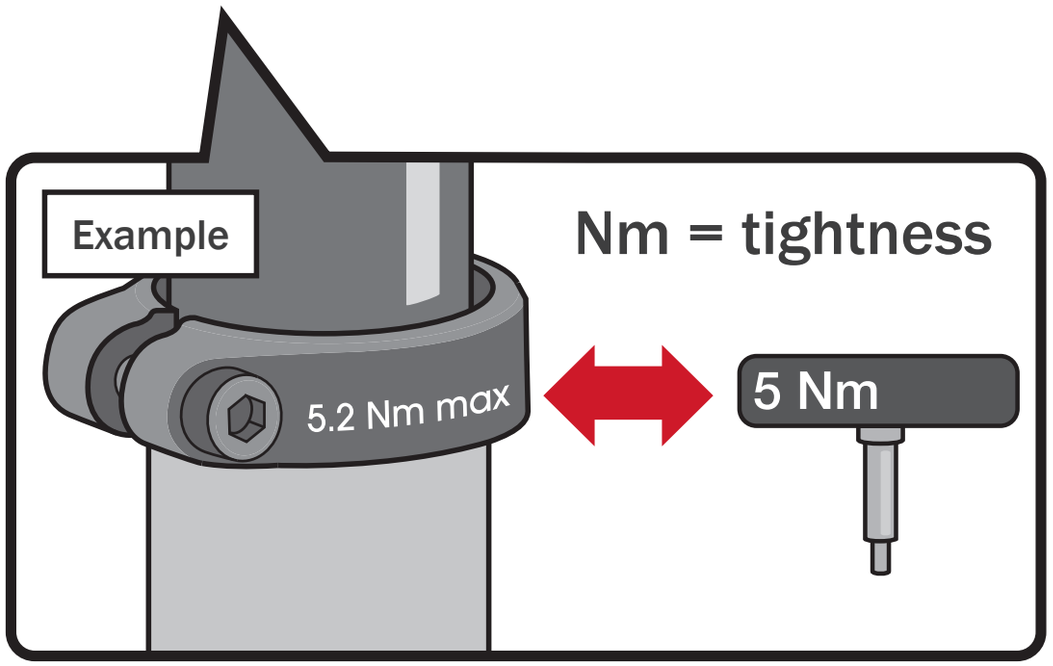

Match the number on the torque wrench to the etching on the component.

Parts and tools will vary based on bike model. Not all tools are provided (such as a tire pump).

2 Take the bike out of the box. Check the bike for shipping damage and make sure all parts are included. Pay special attention to the fork legs and the seat stays (both inside and outside surfaces).

To protect the finish, you may want to leave the frame wraps in place until the bike is assembled.

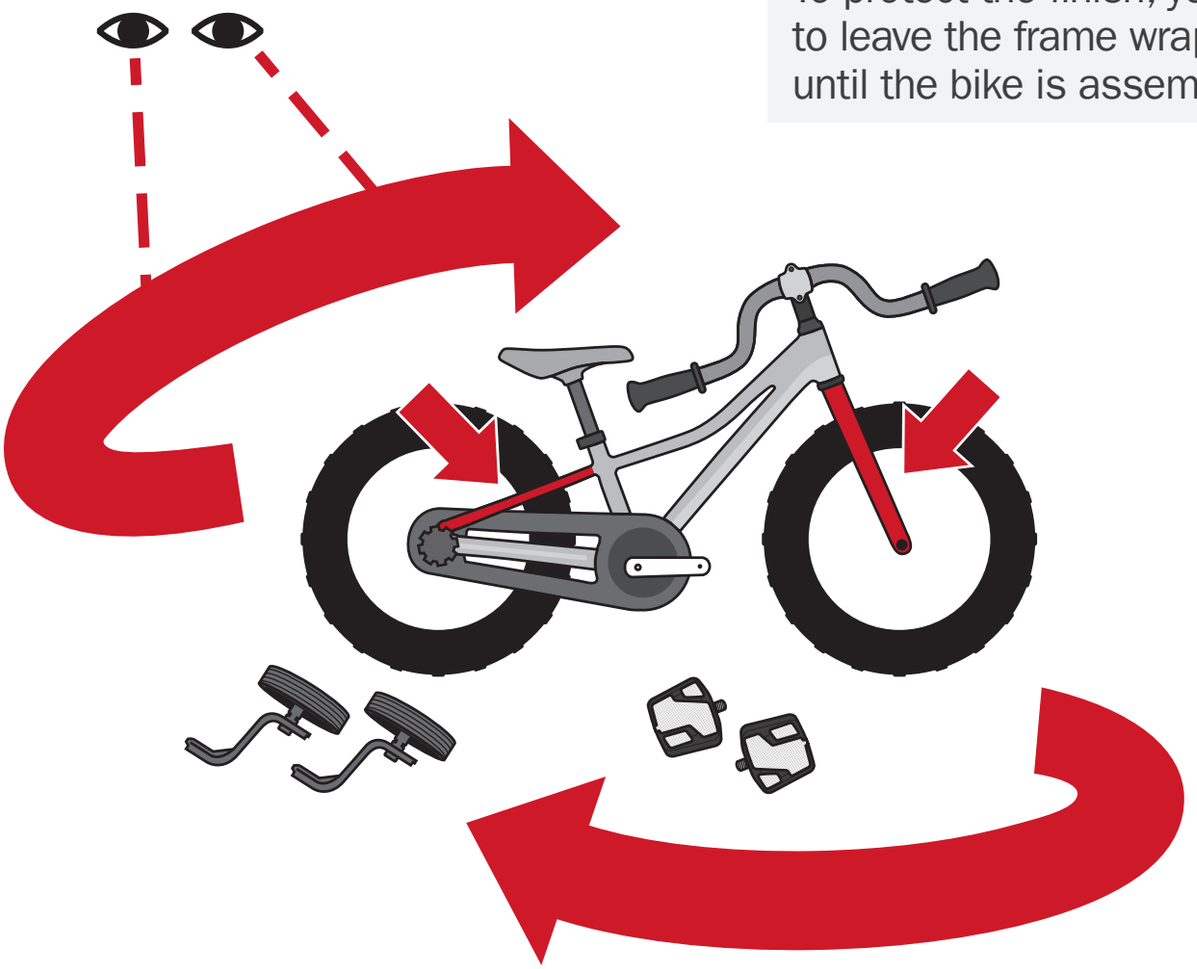

If you notice damage or you're unsure about the initial inspection of your bike, contact Trek Customer Care at 1-800-585-8735.

3

Loosen the stem bolts and rotate the handlebar so it's aligned with the front wheel.

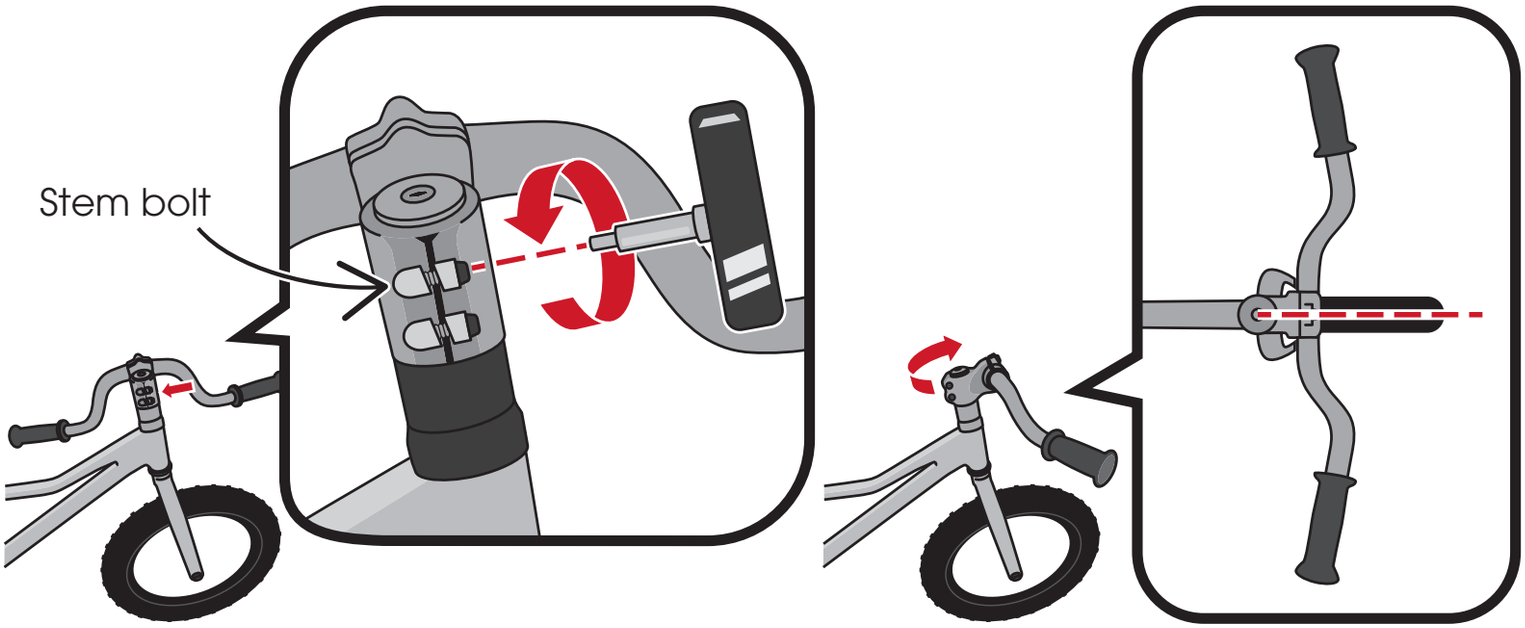

4

Tighten the stem bolts one half turn at a time — switching between them — until you feel the tool click.

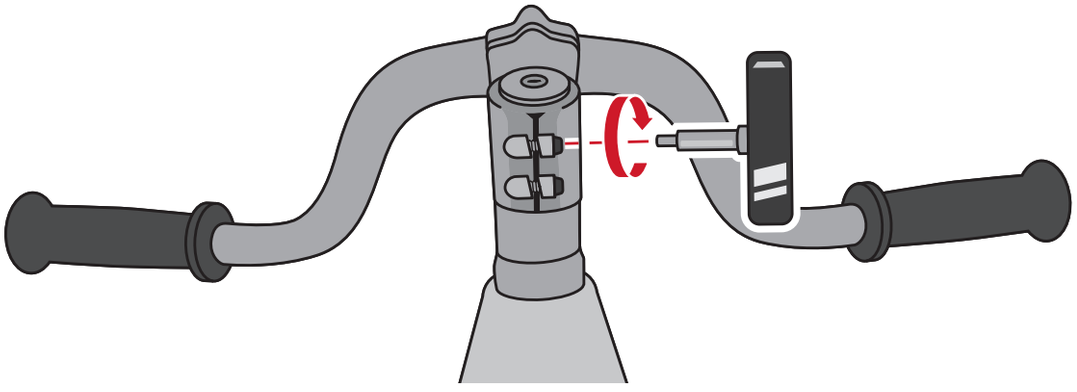

5

Loosen the faceplate bolts a few turns and rotate the handlebar up until it's the same angle as the forks or the brake levers are about 45° to the ground. Then tighten the faceplate bolts until they are snug.

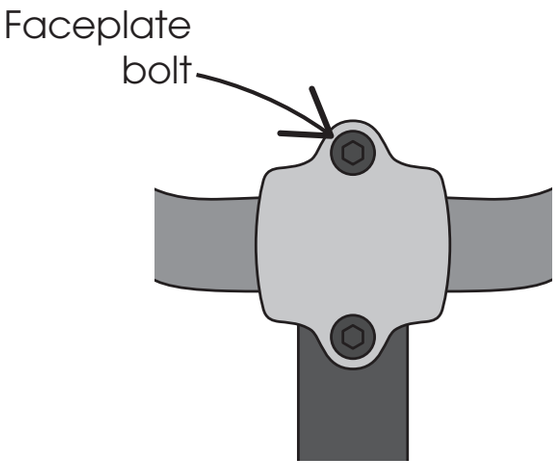

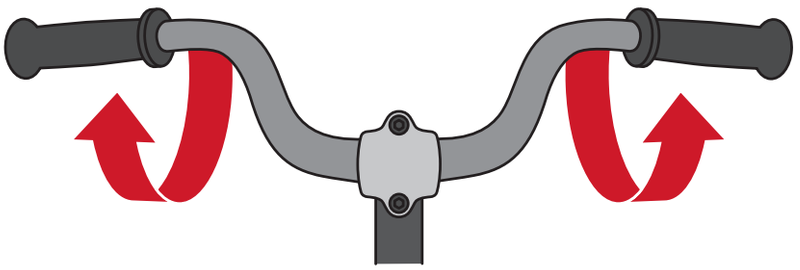

Make sure the handlebar is centered in the faceplate.

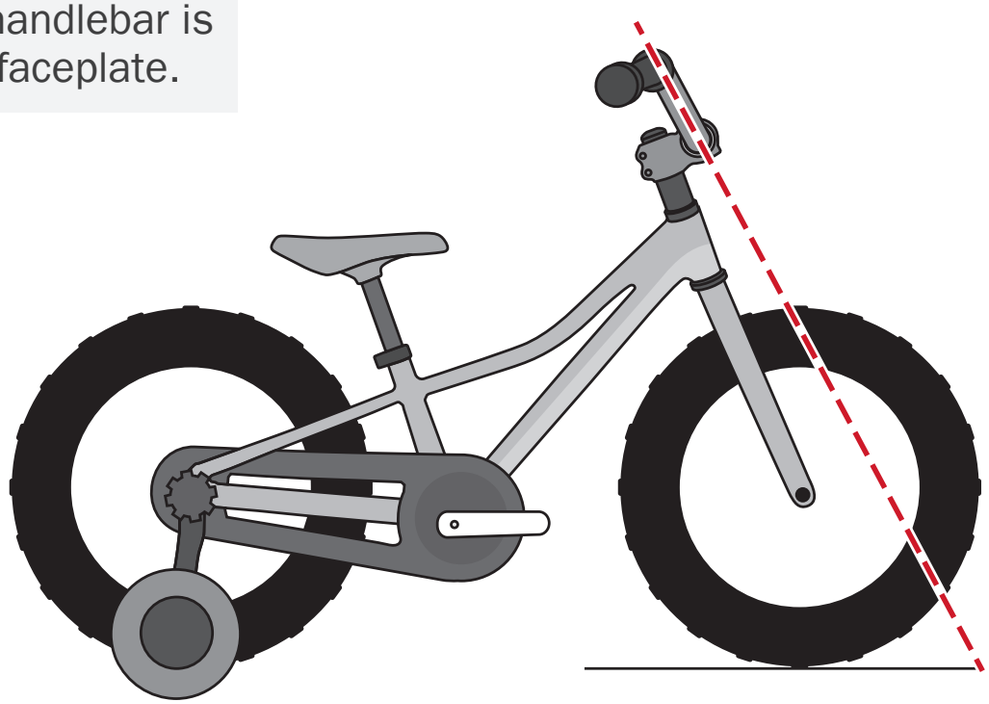

6 Tighten the faceplate bolts one half turn at a time — in the order shown below — until you feel the tool click.

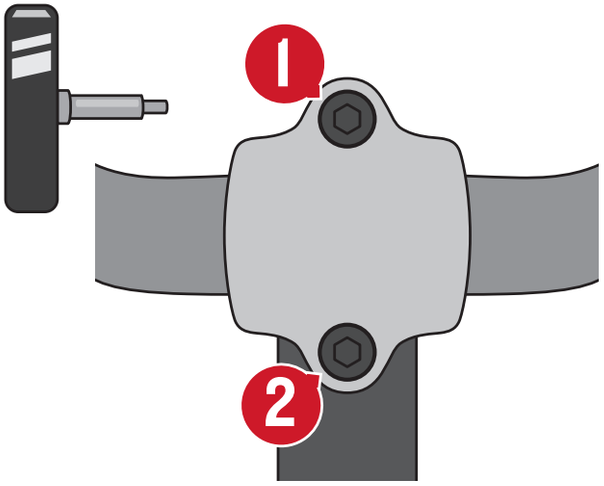

OR

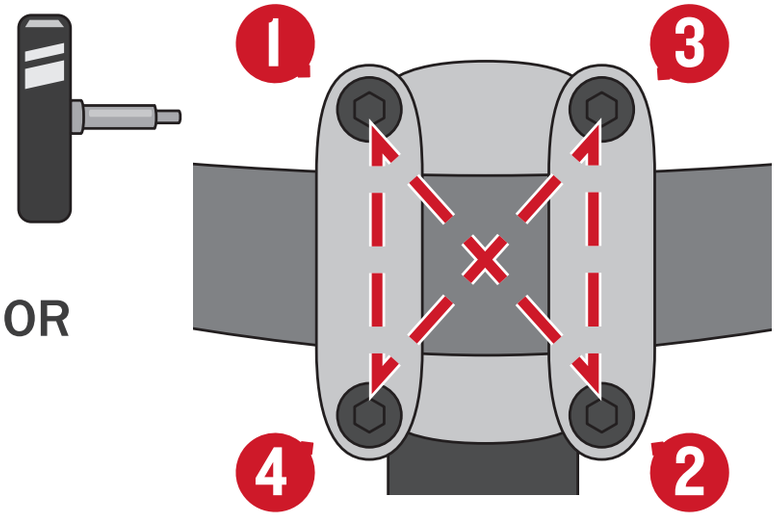

Make sure the gap is equal on the top and bottom. If the spacing is unequal, loosen the bolts and retighten them following the order above.

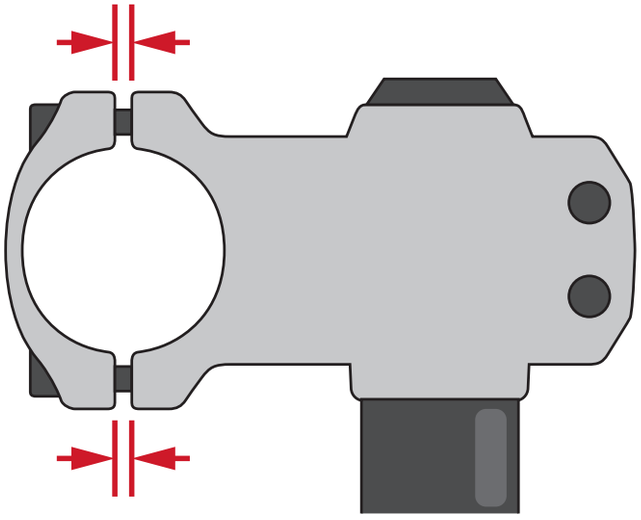

7

Grease the pedal threads and clean the crank arm threads (there may be residue from the packaging strap). If included, install the washers over the pedal threads first.

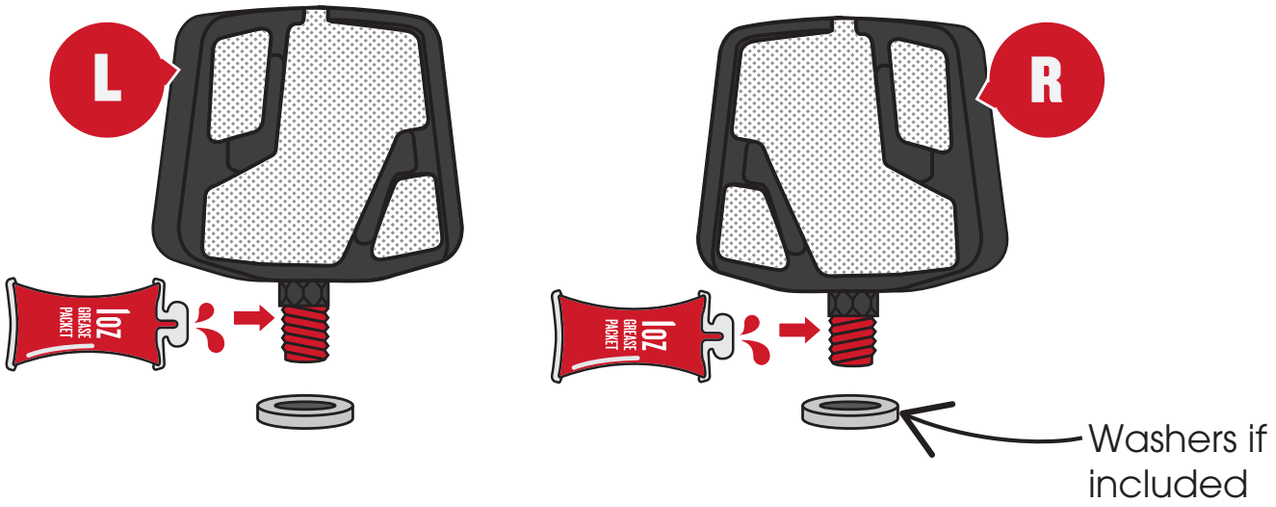

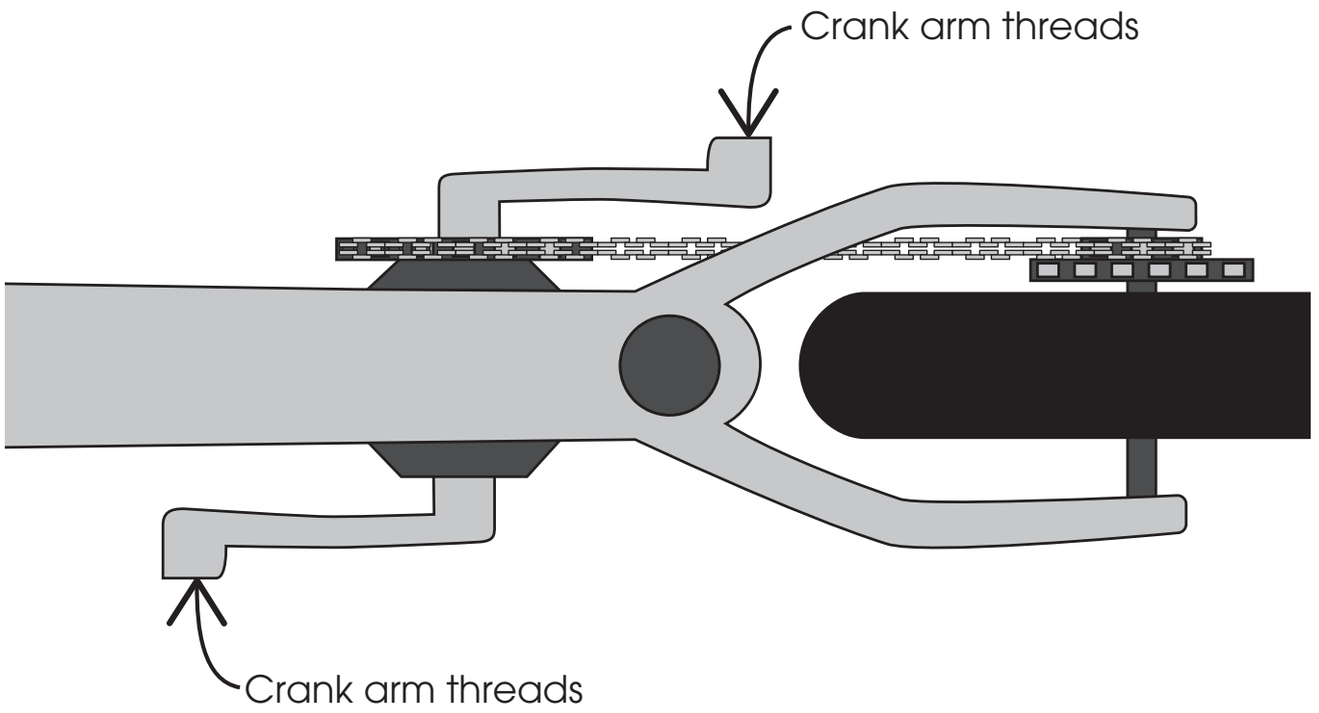

8 Thread the pedals in by hand — tightening by the nut, not the pedal. Then use the pedal wrench to fully tighten the pedals.

Both pedals tighten towards the front of the bike.

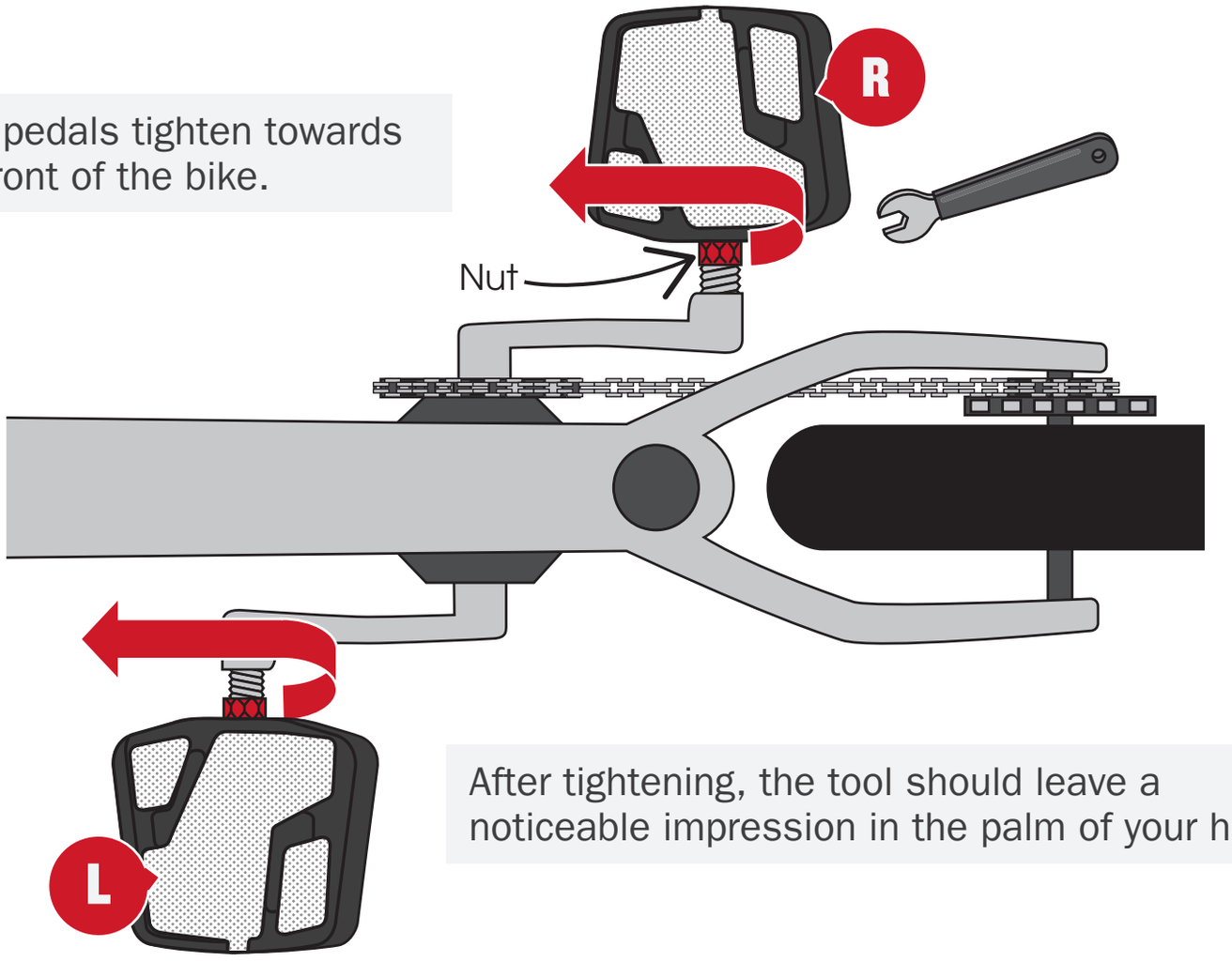

After tightening, the tool should leave a noticeable impression in the palm of your hand.

⚠ WARNING: The chainring has sharp points. Be careful when working around the chainring. Failure to do so may result in cut or pinched skin.

9

If there are training wheels, remove the washers and knobs from the rear axle and install the training wheels. Then fully tighten the knobs.

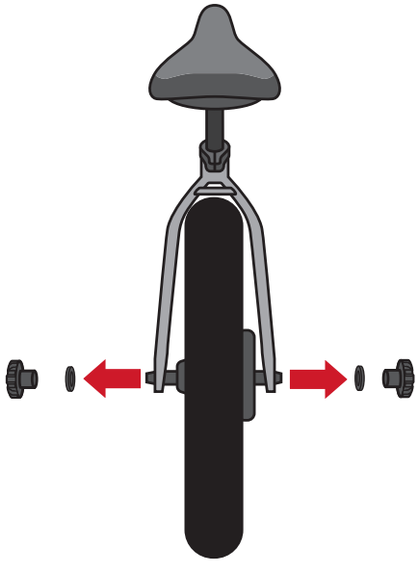

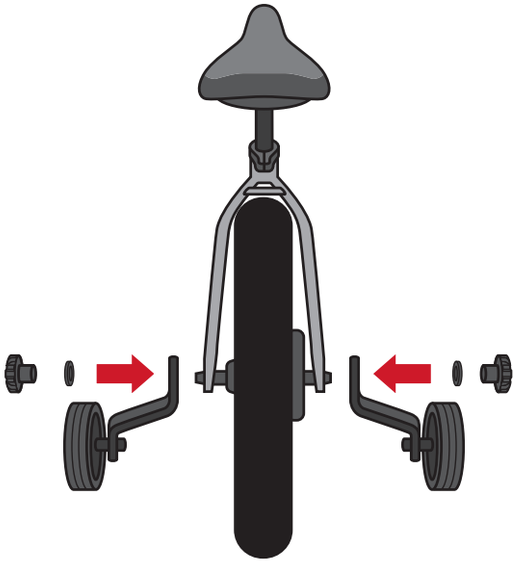

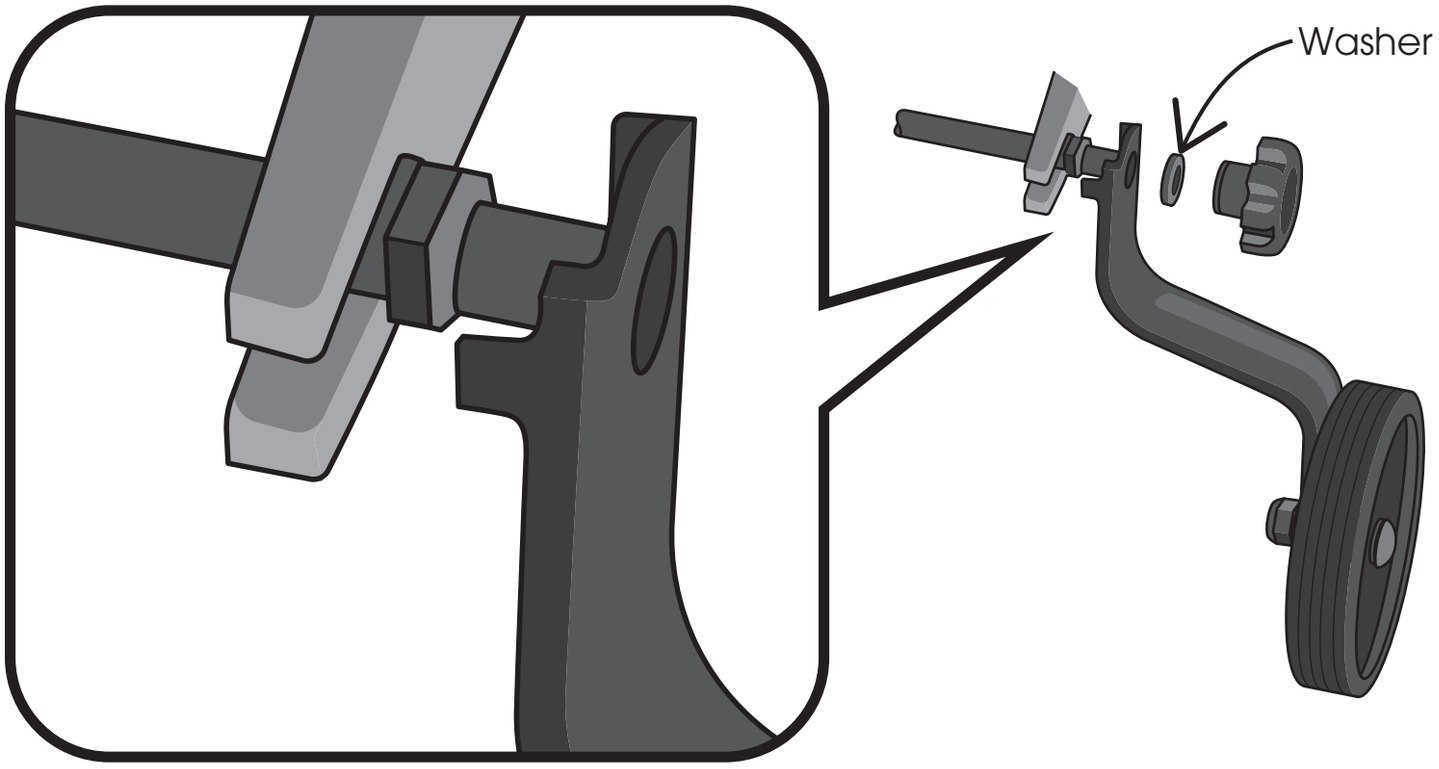

10

Your tires were inflated to the maximum pressure at the factory.

Check the tire pressure. If necessary, inflate both tires to within the pressure range listed on the tire.

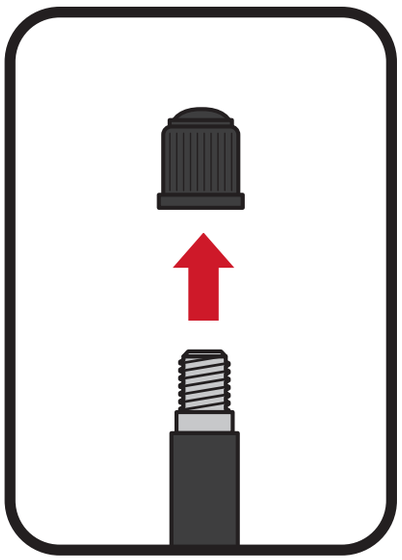



Loosen the collar bolt and adjust the seat height to you or your child's riding preference. Then tighten the collar bolt until you feel the tool click.

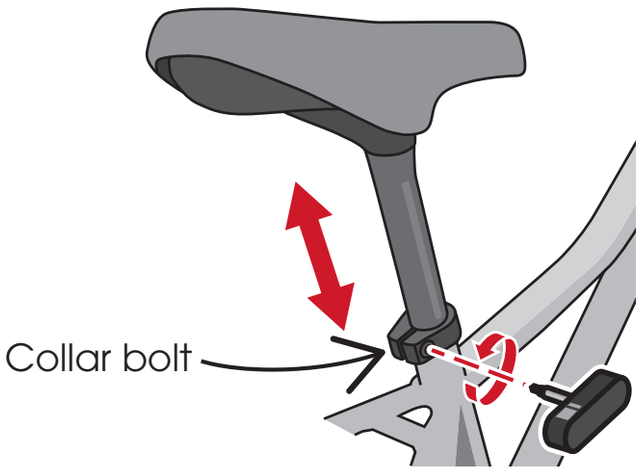

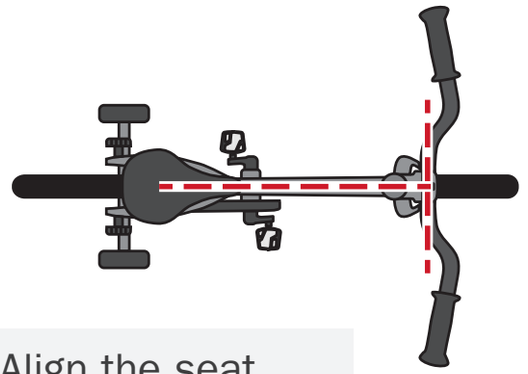

Align the seat with the top tube.



Make sure to insert past the minimum insertion line.



Adjust the seat height to a comfortable position for smaller riders.

BICYCLE ASSEMBLY CHECKLIST

Before and after your first ride, complete this checklist:

- ☐ Handlebar properly aligned? *(Step 3)*
- ☐ Stem properly aligned and stem bolts tightened? *(Steps 4-5)*
- ☐ Faceplate bolts properly tightened? *(Step 6)*
- ☐ Pedals installed correctly and tightened? *(Steps 7-8)*
- ☐ Training wheels installed correctly? *(Step 9)*
- ☐ Tires inflated to correct pressure? *(Step 10)*
- ☐ Seatpost installed and seat height correct? *(Step 11)*
- ☐ Read the Trek Owner's Manual (included with your bike).
- ☐ Register your bicycle.
- ☐ Perform a pre-ride check.

Register your bike at trekbikes.com/productRegistration/

Watch the Pre-Ride Check video on the Trek Bicycle YouTube channel.

WARRANTY: For information about your bike's warranty, please see trekbikes.com/inside_trek/warrantied_for_life.

QUESTIONS? Please contact your local Trek bike shop, call Trek Customer Care at 1-800-585-8735 from 10am – 6pm Monday – Friday CST, or chat with us at trekbikes.com/contactus.

RIDE BIKES
HAVE FUN
FEEL GOOD

TREK

PN 5327034