

2025 FX+ 7

SERVICE MANUAL

Contents

Routing


Routing — brake and shift


Routing — e-system

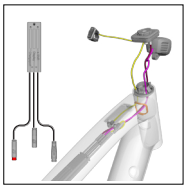
Routing — Smart Box and display


Routing — rear light

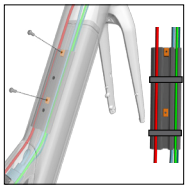
Cable tray


Routing — dropper seatpost

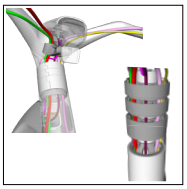
Routing — headset

Headset

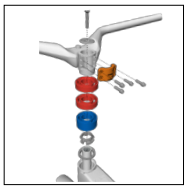
Headset

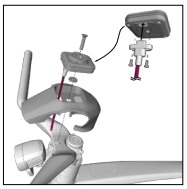
Barstem cover and light bracket

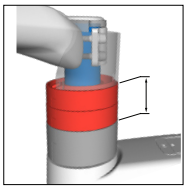
Headset spacers

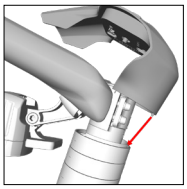
Install the barstem and cover

E-system

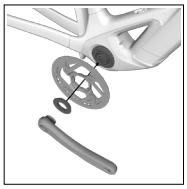
Drive unit lockring

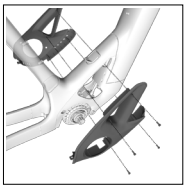
Drive unit covers

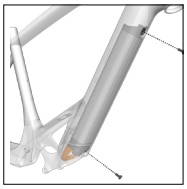
Battery

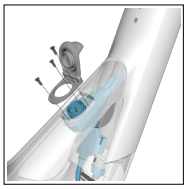
Charge port cover


Drive unit bolts

Frame

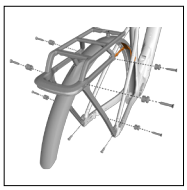
Rear rack and fender

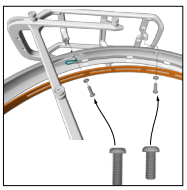
Install the rear rack and fender

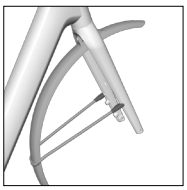
Front fender

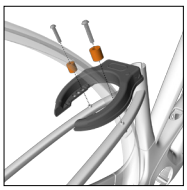
Ring lock

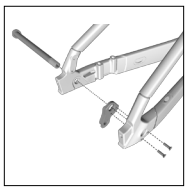
Rear derailleur hanger

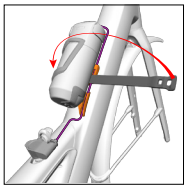
Range extender

Copyright 2024 Trek Bicycle Corporation All Rights Reserved

About this manual

Scope

This manual contains parts diagrams, specifications (such as grease and torque values), instructions, part numbers, and helpful tips. It does not contain instructions for all components (such as brake calipers). Refer to the original manufacturer for more information.

Replacement parts

Trek recommends using only Trek OEM (original manufacturer) replacement parts.

Additional info

The Owner's Manual is available at Trekbikes.com/manuals.

Inspect the bike

Please inspect the bicycle carefully after removal from the box and all packaging:

- Inspect all surfaces of the bicycle for damage, pay special attention to the fork legs and the seat stays (both inside and outside surfaces).
- If packaging damage is located near the front of the bicycle, remove the fork from the frame and inspect the steerer tube for damage.

Legend

★ Cable (zip) tie

Nm Torque value

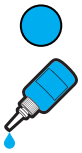
Apply appropriate threadlocker


Apply Bontrager grease

Safety

WARNING

Properly tighten hardware

Always tighten hardware to the specified torque. Over-tightening hardware could deform or break the hardware or components. Under-tightening or over-tightening hardware could cause hardware or components to become loose. Either situation could damage the bicycle and result in injury to the rider.

WARNING

Reapply threadlocker

All reused-fasteners with pre-applied threadlocker must be cleaned with isopropyl alcohol and have new threadlocker applied before re-assembly. If threadlocker is not applied, the fasteners may loosen which could damage the bicycle and result in injury to the rider.

Routing — brake and shift

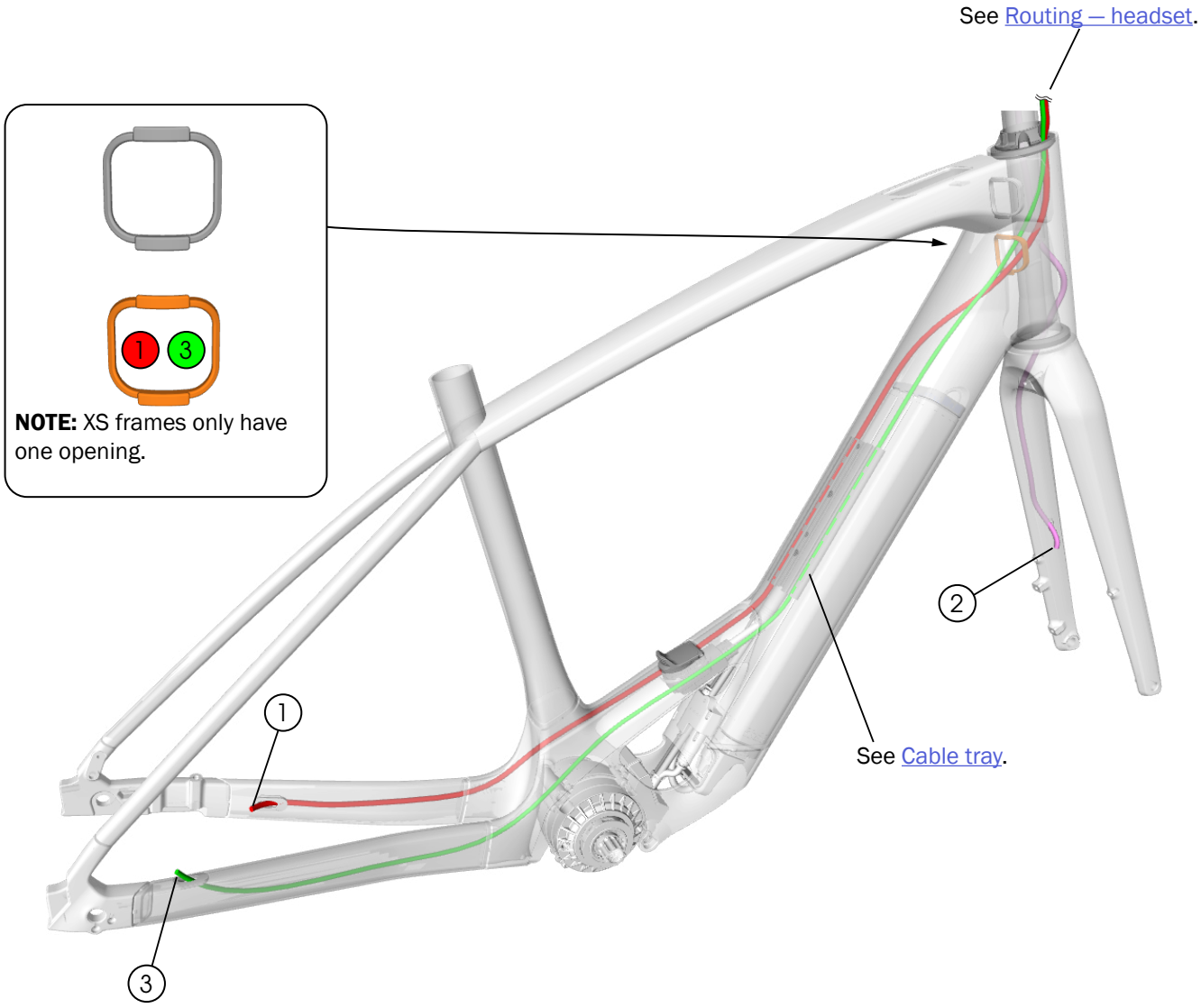

1. Rear brake hose
2. Front brake hose
3. Rear derailleur cable

Routing — e-system

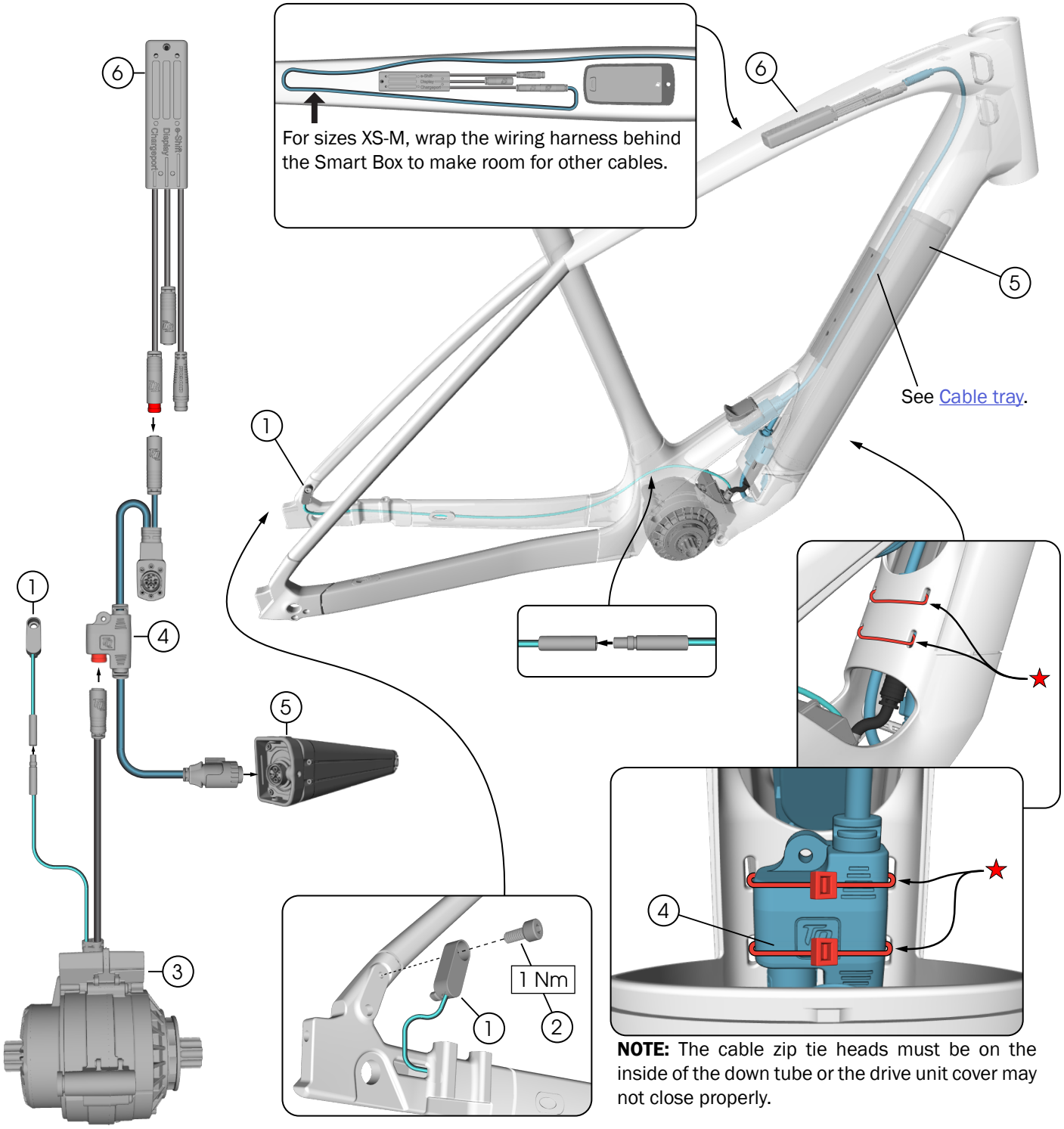

1. Speed sensor — *W5285131*
2. Fastener (M4 x 8 mm)
3. Drive unit — *W5304866*
3. — *W562831*
4. Wiring harness — *5289574*
5. Battery, 360 Wh — *5289554*
6. Smart Box — *5289564*

Routing — Smart Box and display

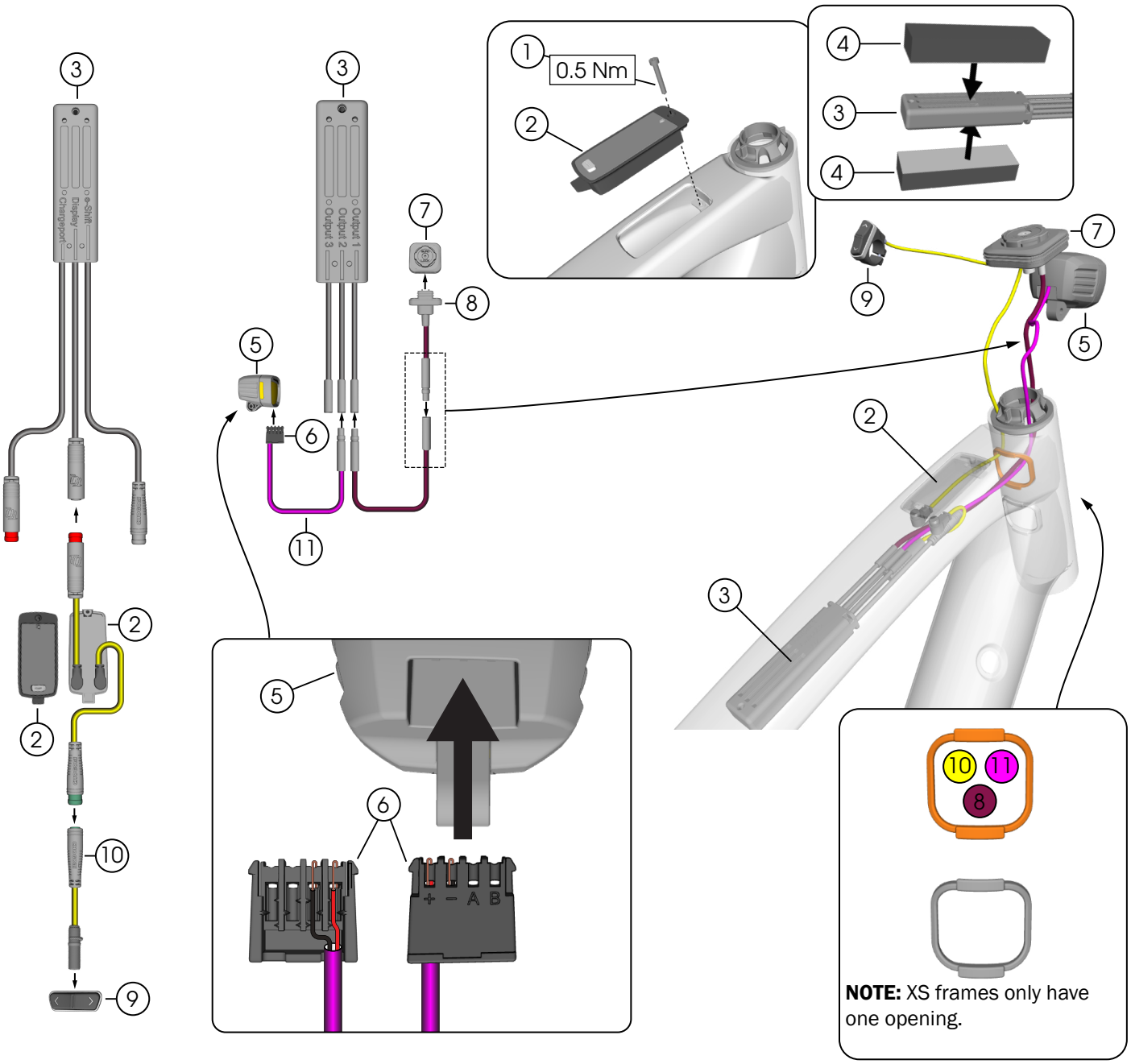

1. Fastener (M3 x 20 mm) — T10 — *5289562*
2. Display
3. Smart Box — *5289564*
4. Foam pads — *5305634*
5. Front light — *W5304404*
6. Connector — *5331539*
7. Quad Lock® charger — *W5312184*
8. Quad Lock® connector cable — *W5315690*
9. Remote — *5289561*
10. Remote cable — *5289563*
11. Front light cable — *W5316468*

Routing — rear light

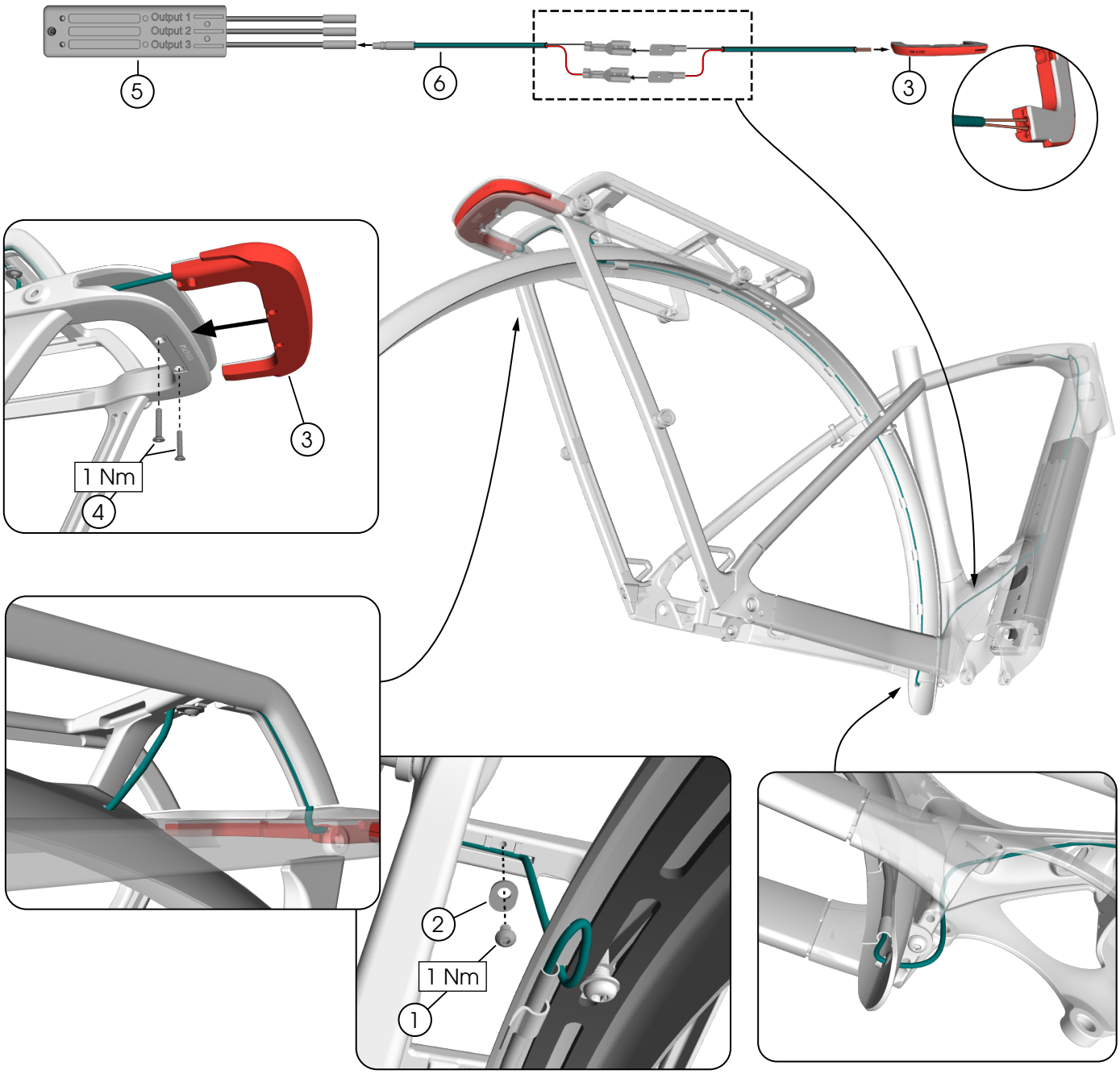

1. Fastener (M3 x 5 mm) — 2 — *5271551*
2. Washer (M3)
3. Rear light and cable — *W5318327*
4. Fasteners (M3 x 16 mm) — 2 — *W524884*
5. Smart Box — *5289564*
6. Rear light cable — *W5318862*

Cable tray

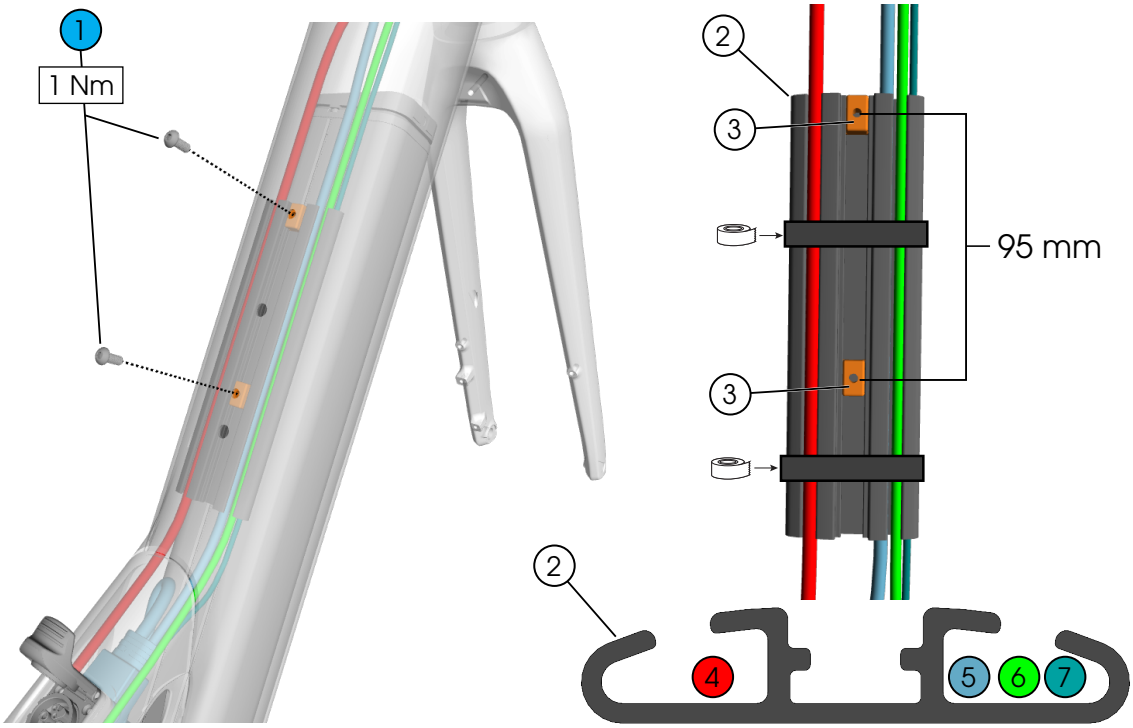

1. Fasteners (M4 x 10 mm) — 2.5 — *5317308*
2. Cable tray — *W5317709*
3. Sliding nuts (M5) — *W5283261*
4. Rear brake hose
5. Wiring harness — *5289574*
6. Rear derailleur cable
7. Rear light cable — *W5318327*

Install the cable tray

1. Insert the cable tray assembly (see graphic above) through the upper opening.

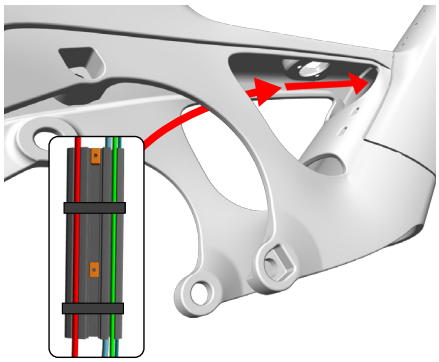

2. Use a 3 mm allen key to hold the cable tray in place while installing the fasteners.

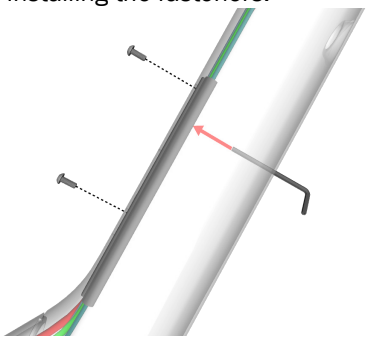

Routing — dropper seatpost

NOTE: Dropper posts are sold aftermarket.

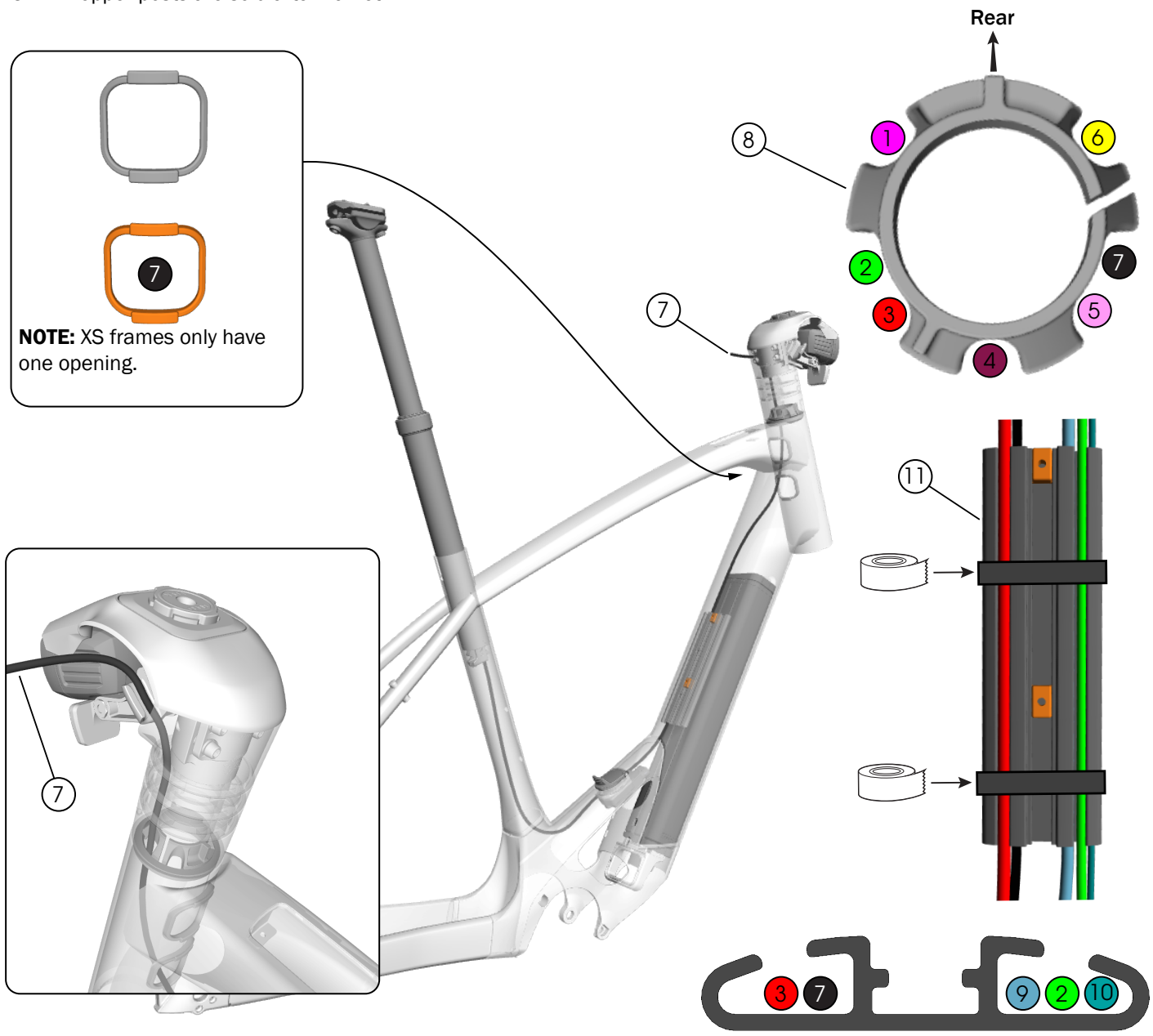

1. Front light cable
2. Rear derailleur cable
3. Rear brake hose
4. Quad Lock® cable
5. Front brake hose
6. Remote cable
7. Dropper seatpost cable
8. Split ring — *W5316417*
9. Wiring harness — *5289574*
10. Rear light cable
11. Cable tray — *W5317709*

Routing — headset

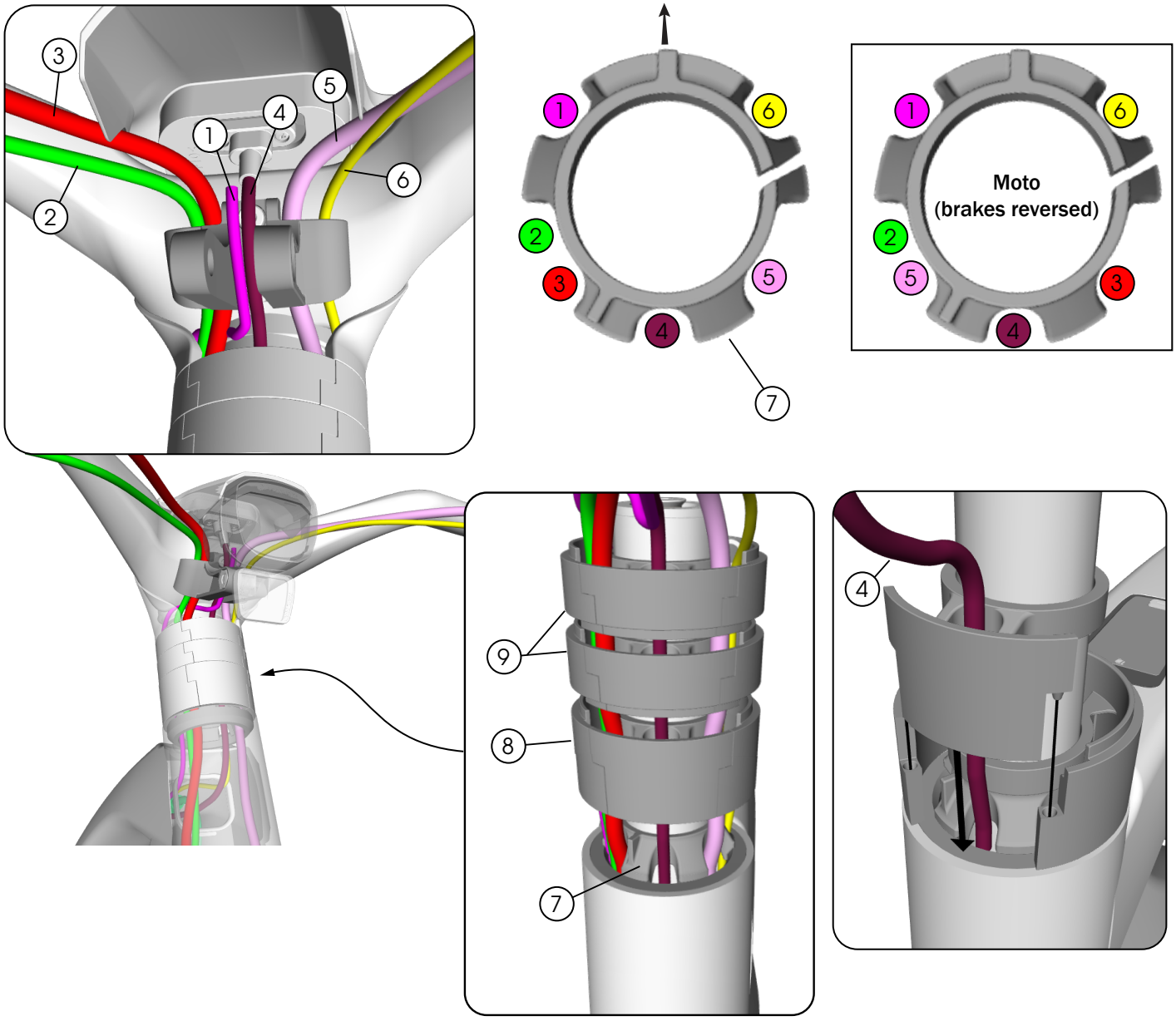

1. Front light cable
2. Rear derailleur cable
3. Rear brake hose
4. Quad Lock® cable
5. Front brake hose
6. Remote cable
7. Split ring — *W5316417*
8. Bearing top cover — *5330298*
9. Spacers (15 mm) — *5330299*

Headset

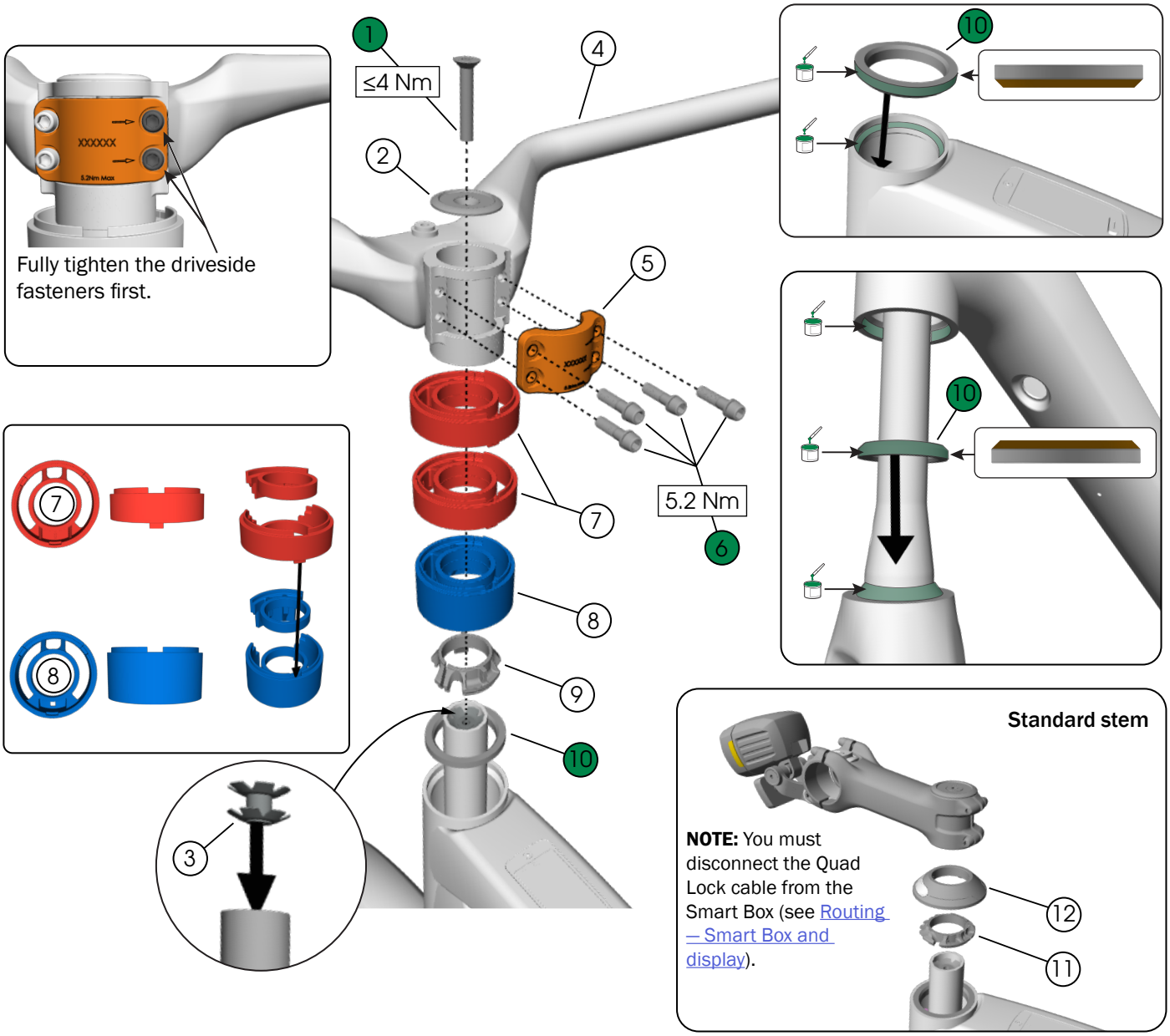

1. Fastener (M6 x 35 mm)
2. Top cap
3. Compression nut (1-1/8") — *63377*
4. Barstem (680 mm)
5. Faceplate
6. Fasteners (M5 x 18 mm)
7. Spacers (15 mm) — *5330299*

4 — *W547432*

4 — *W5316407*

8. Bearing top cover — *5330298*
9. Split ring — *W5316417*
10. Bearings — *W532843*
11. Split ring (standard stem) — *W5315339*
12. Bearing top cover (standard stem) — *5328901*

Barstem cover, Quad Lock, and light bracket

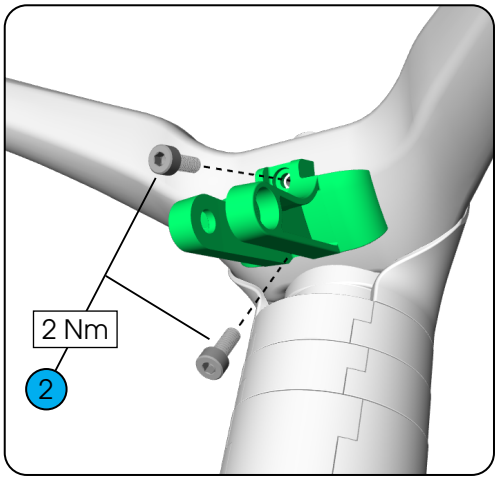

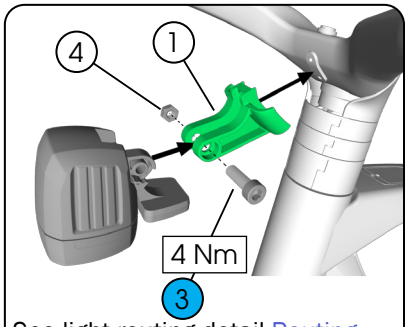

See light routing detail Routing — Smart Box and display).

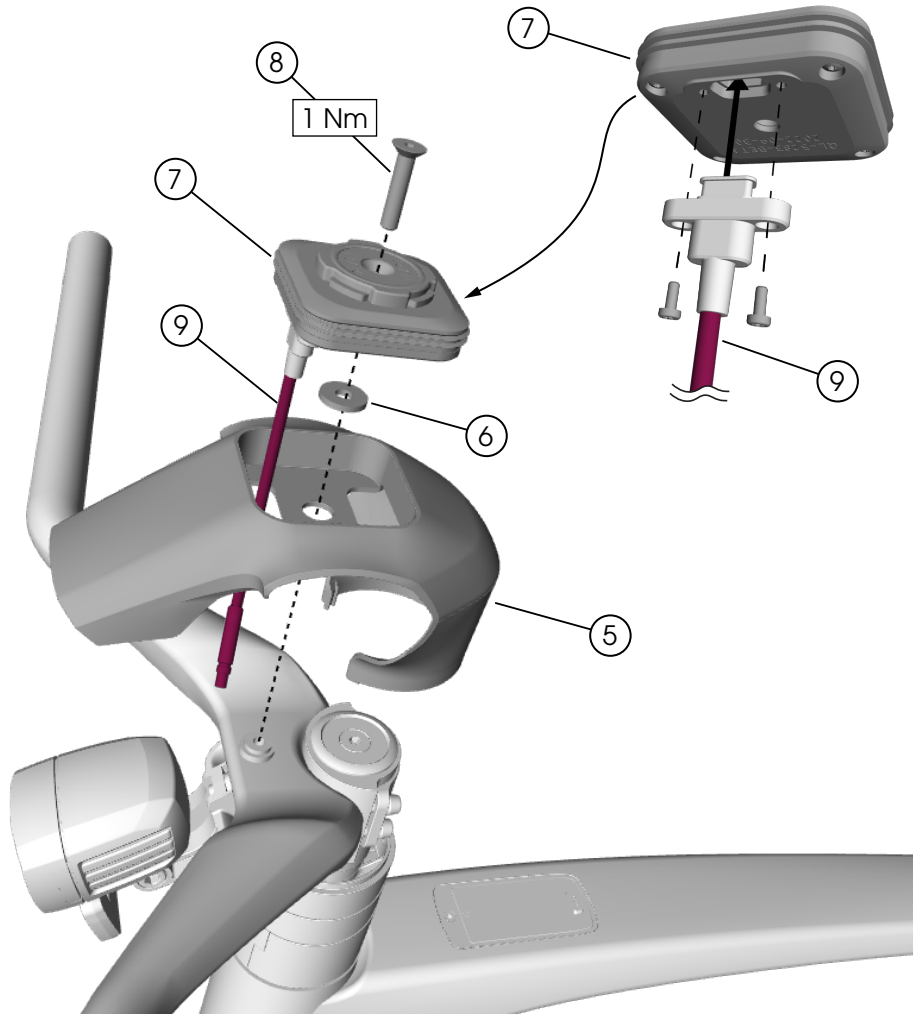

1. Light bracket — *W5316465*
2. Fasteners (M4 x 10 mm) — *5305635*
3. Fastener (M6 x 20 mm)
4. Nut (M6)
5. Barstem cover — *W5316466*
6. Washer (M5)
7. Quad Lock® charger — *W5312184*
8. Fastener (M5 x 25 mm)
9. Quad Lock® connector cable — *W5315690*

Quad Lock® phone charger

To enable wireless charging, you will need a Quad Lock® phone case designed for your phone. These are available at authorized Trek retailers or at **quadlockcase.com**.

Headset spacers

NOTE: If you remove spacers below the stem, you must add the same height of spacers above the stem or cut the steerer tube.

WARNING

Do not exceed 30 mm of headset spacers above or below the barstem. If there are more than 30 mm of spacers, the steerer tube could become damaged and break, causing a crash resulting in injury.

Below the stem

The top of the steerer tube must sit 1-5 mm below the top of the barstem.

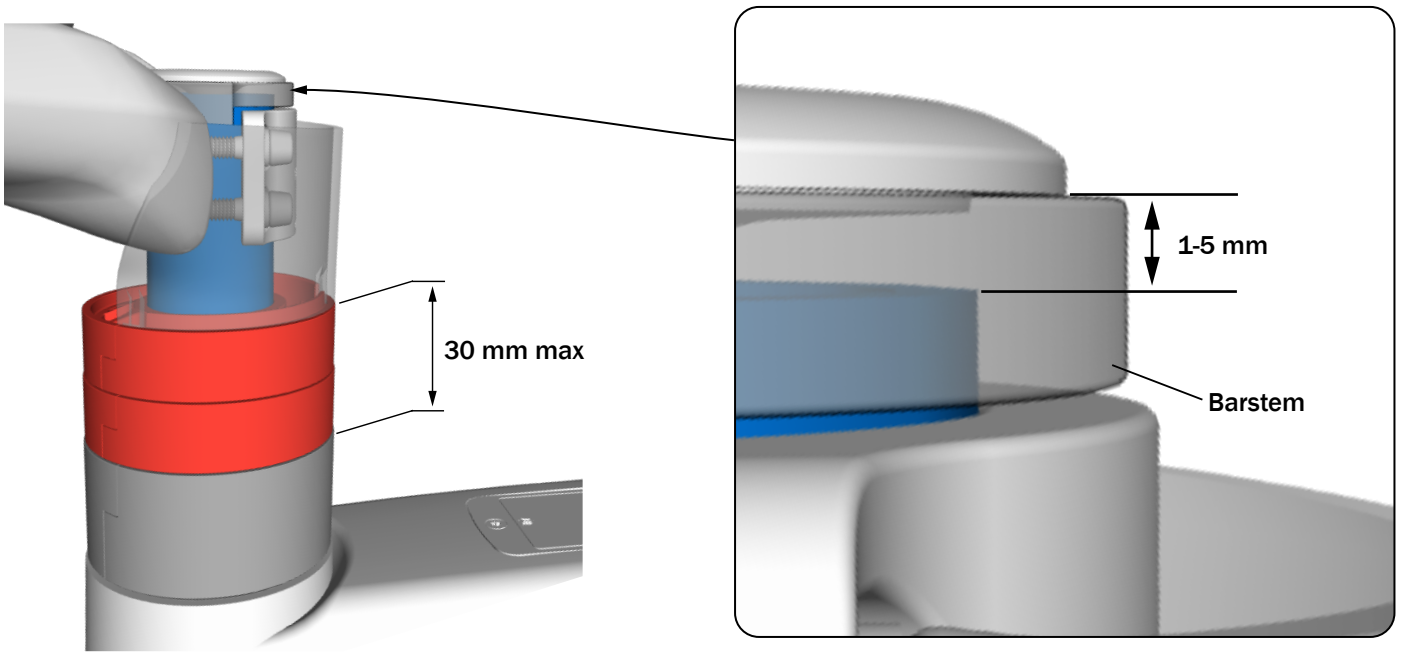

Above the stem

You can lower the barstem if you remove spacers below it and add an equivalent height of standard spacers above it. The top of the steerer tube must sit 3-4 mm into the top spacer.



NOTE: If there are any spacers above the stem, you must disconnect the Quad Lock® and remove the barstem cover and Quad Lock® charger.

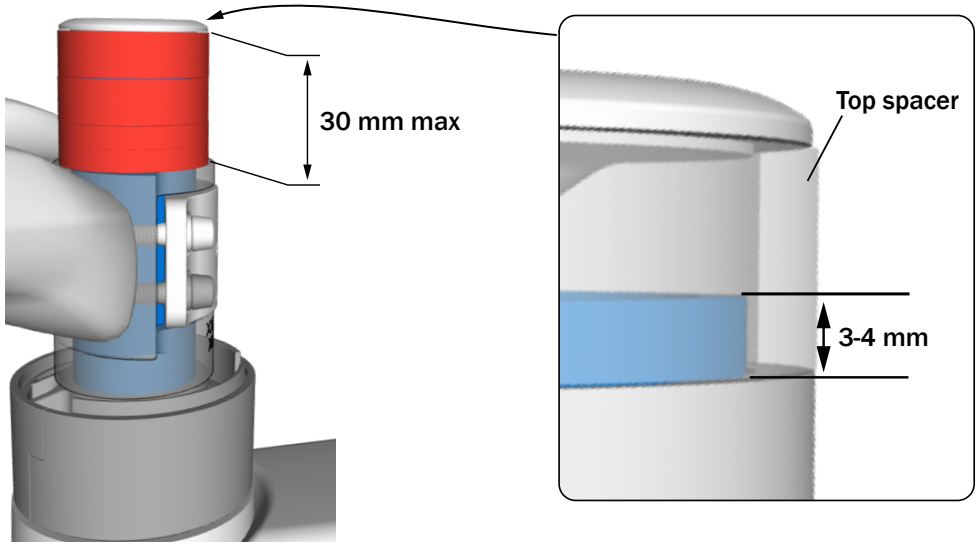

Install the barstem and cover

1. Slide the barstem down the steerer tube.

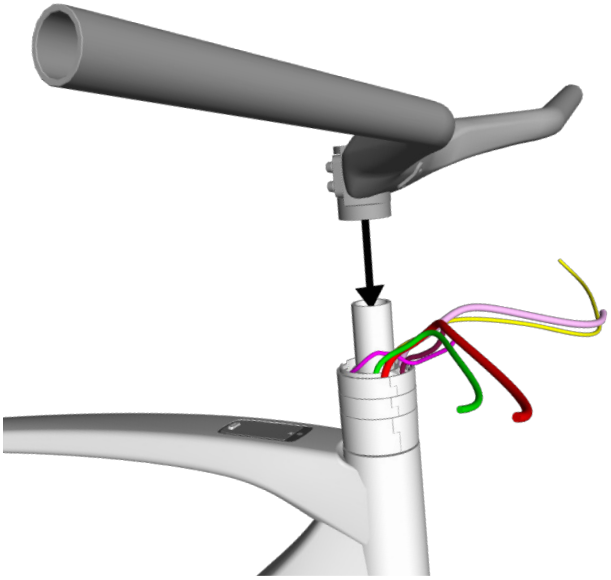

2. Install the top cap and fastener.

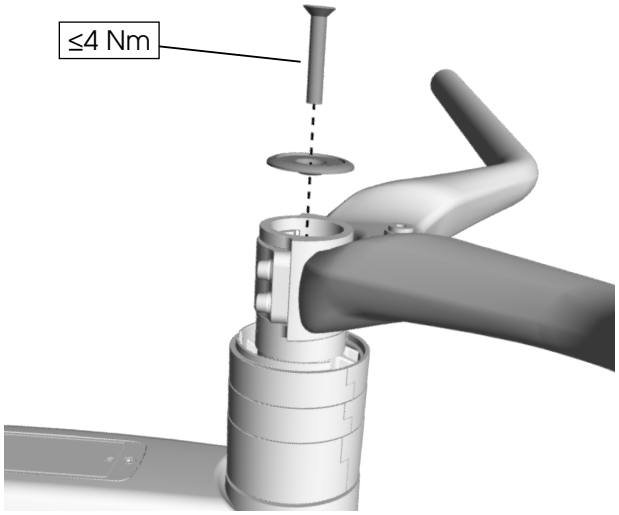

3. Fully tighten the fasteners on the drive side of the barstem — switching between them — until they are fully torqued.

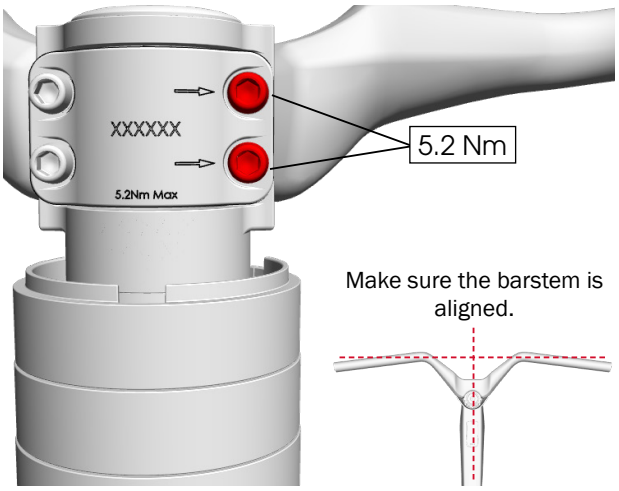

4. Fully tighten the fasteners on the non-drive side of the barstem — switching between them — until they are fully torqued.

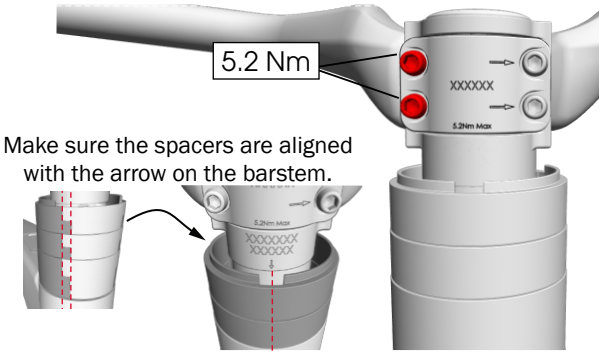

5. Loosely install the light bracket (you will need to slide the cables through the bracket for adjustments).

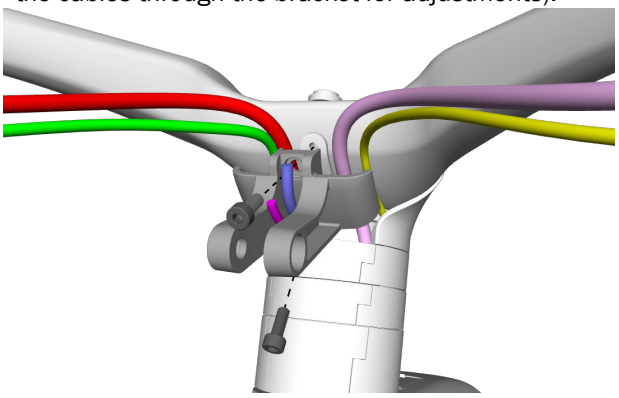

Install the barstem and cover (continued)

6. Install and connect all handlebar components except the front light.
7. Fully tighten the light bracket fasteners.

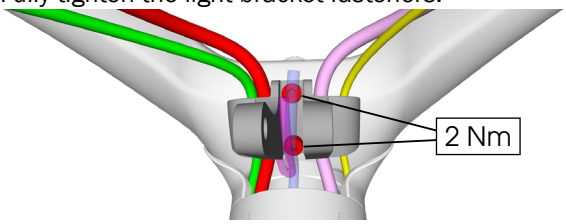

8. Connect the light wire to the connector and insert the connector into the front light. Then attach the light to the bracket — do not fully tighten the fastener.

   NOTE: You will need to tilt the light down to access cables.

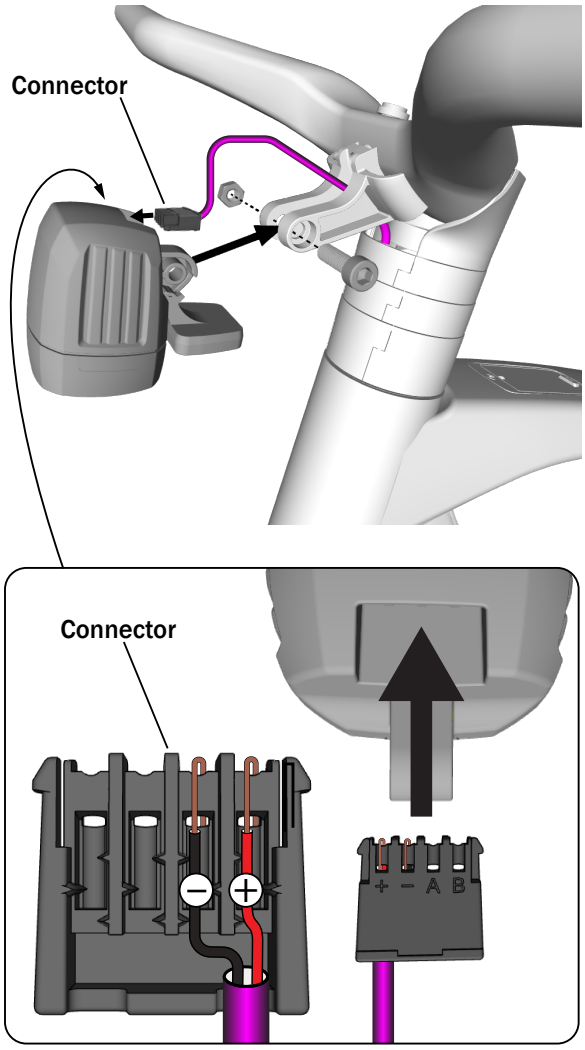

9. Assemble the Quad Lock® charger and barstem cover. Then connect the cables.

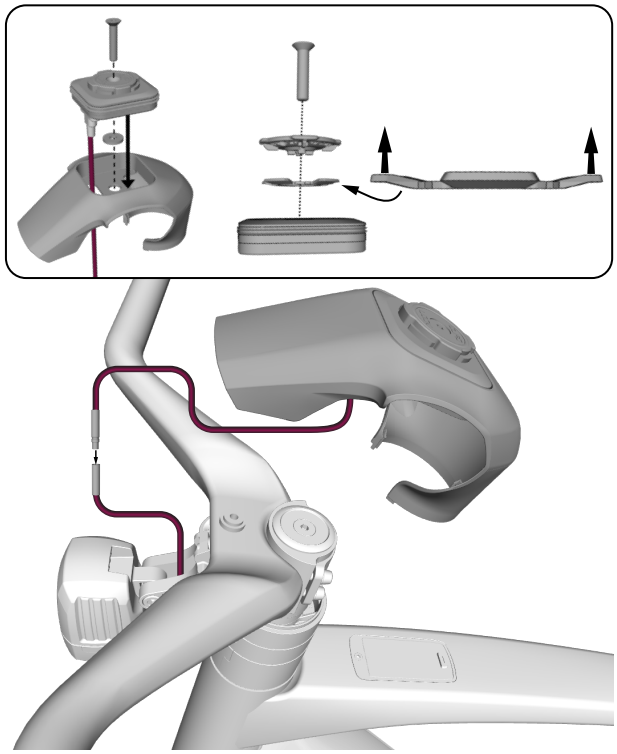

10. Install the barstem cover — starting with the rear notch — then the front notches.

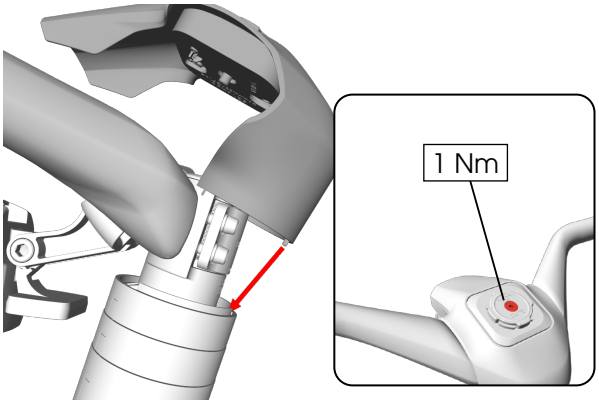

11. Tilt the front light up and tighten the fastener.

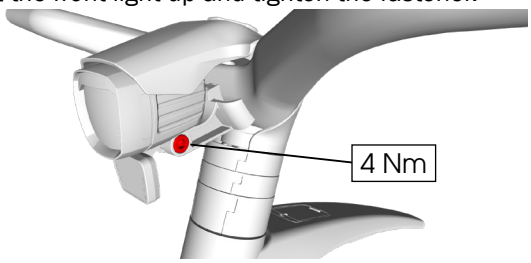

Drive unit lockring

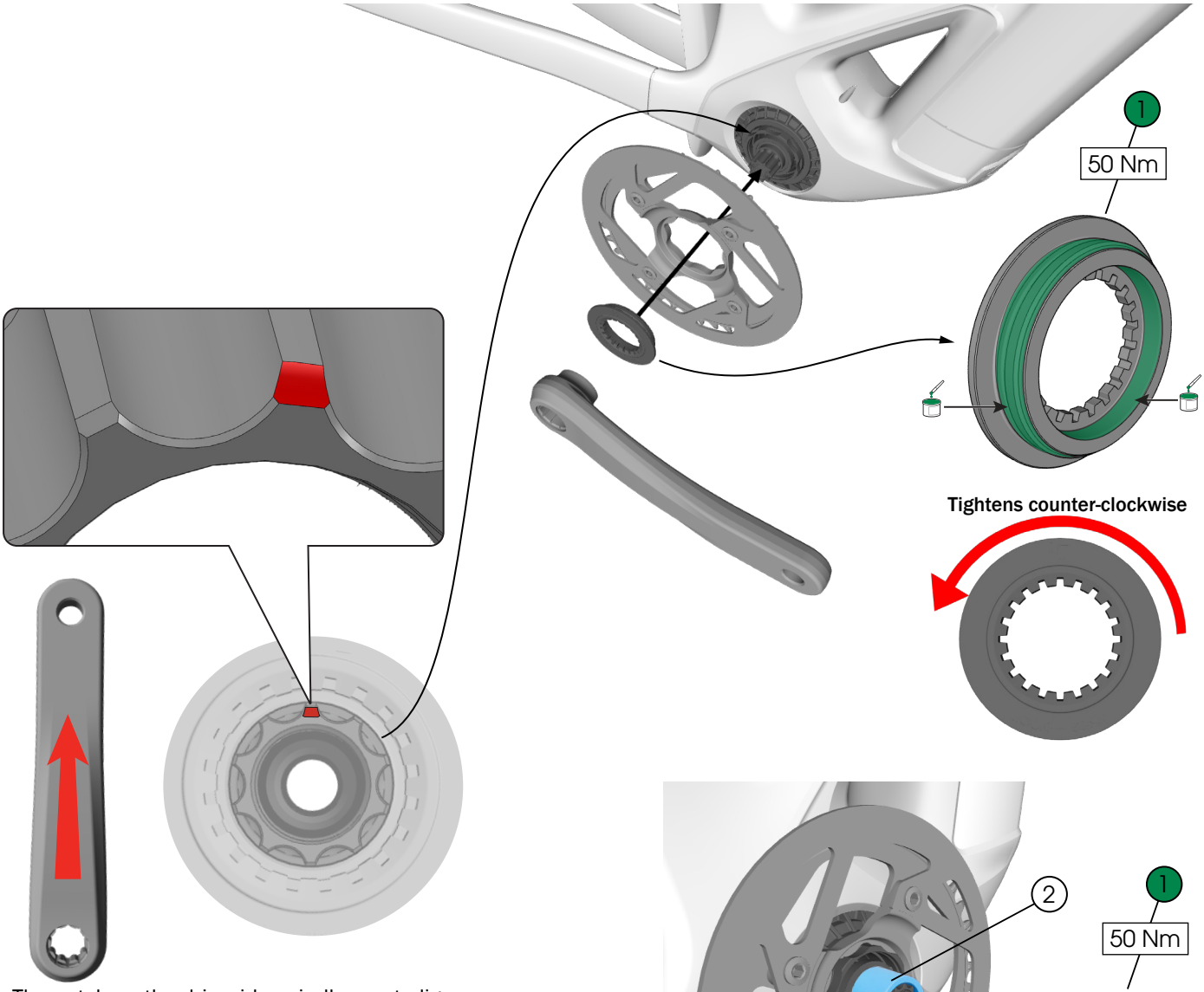

The notch on the driveside spindle must align with the crank orientation.

NOTE: Installing the cranks in a different position may result in the assistance not working properly.

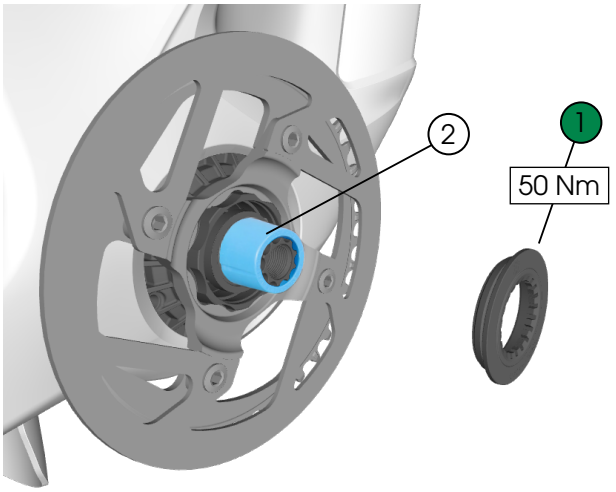

Use the lockring sleeve when installing or removing the lockring.

NOTICE: Failure to use the protective sleeve could damage the seal on the lockring and allow water to damage the drive unit.

1 Lockring

2 Protective sleeve

BB20 — *5309454*

Drive unit covers

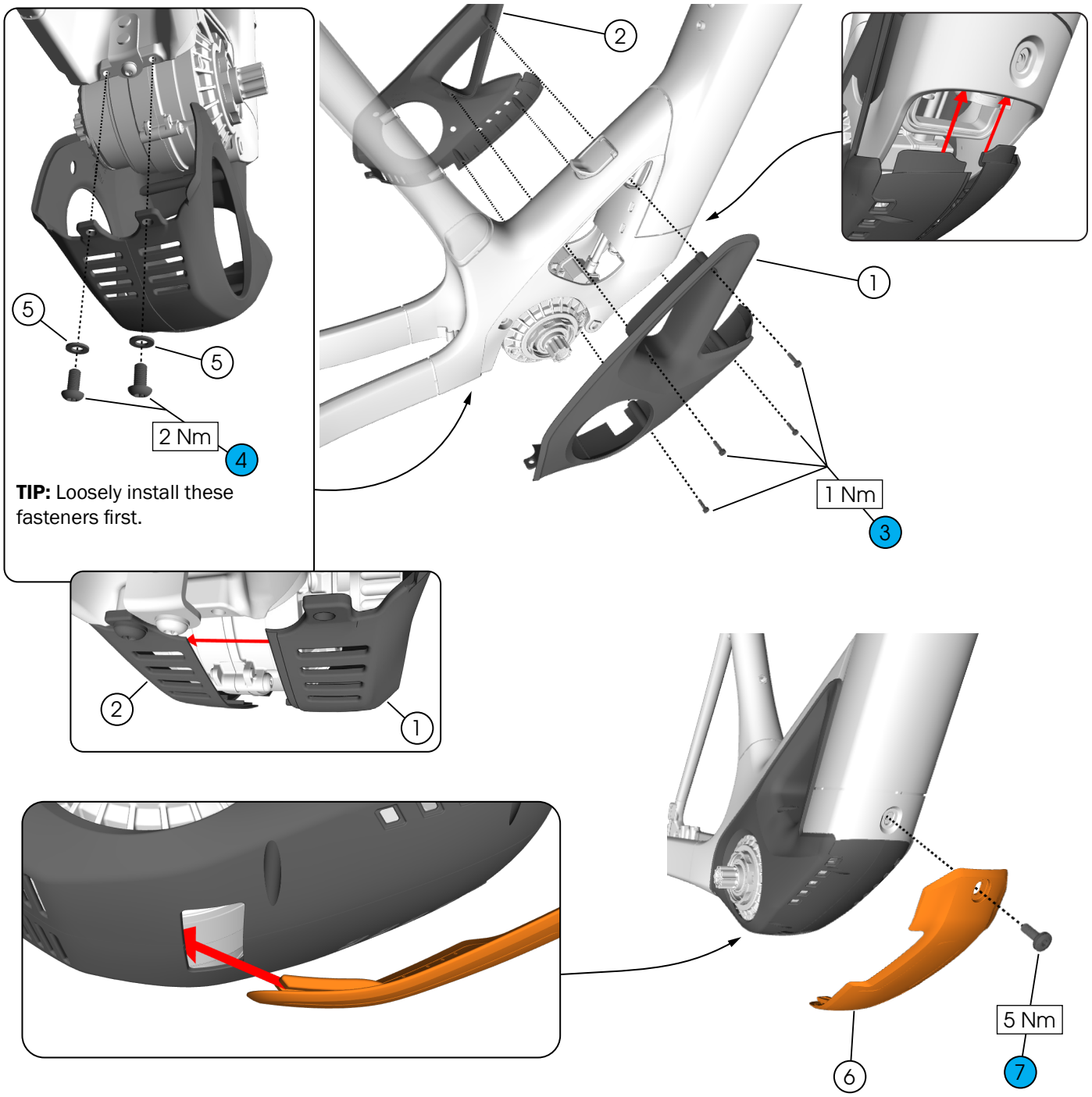

1. Cover, drive side — *W5318863*
2. Cover, non-drive side — *W5318864*
3. Fasteners (M3 x 10 mm) — 2.5 — *W545633*
4. Fasteners (M5 x 10 mm) — 3 — *5317306*
5. Washers (M5) — *W521137*
6. Guard — *W5318865*
7. Fastener (M6 x 20 mm) — 4 — *W5275266*

Battery

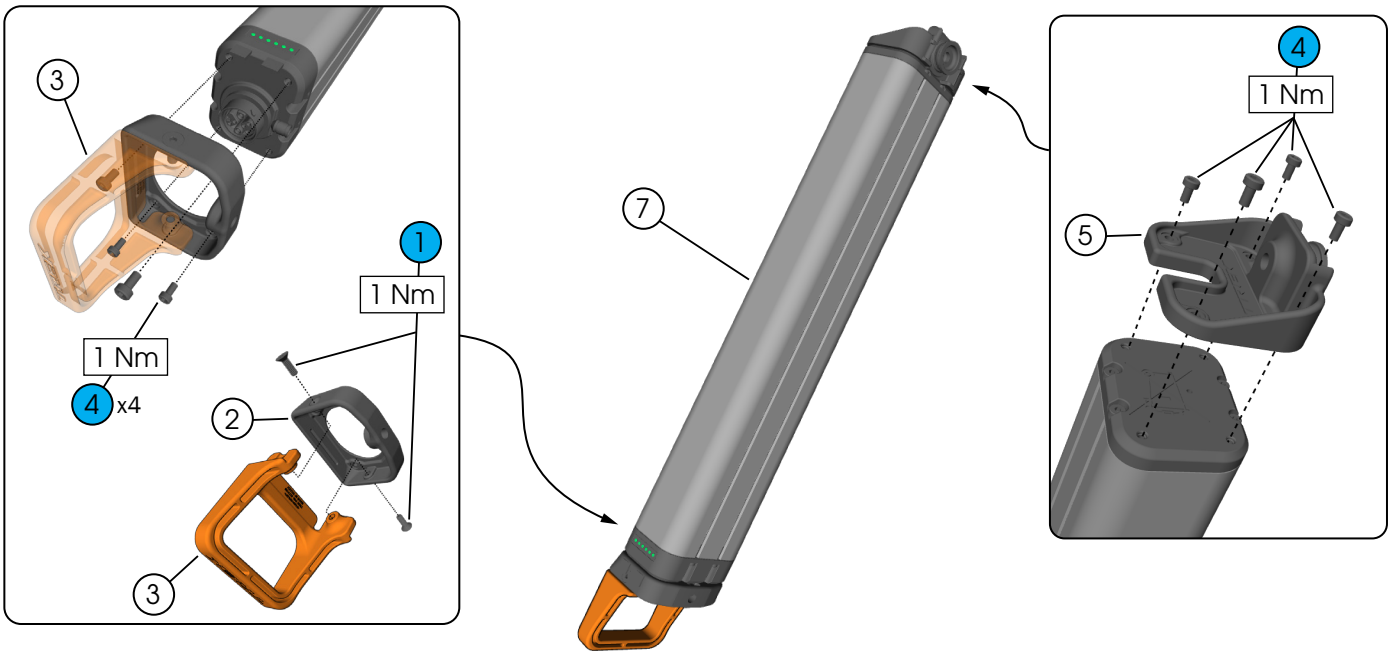

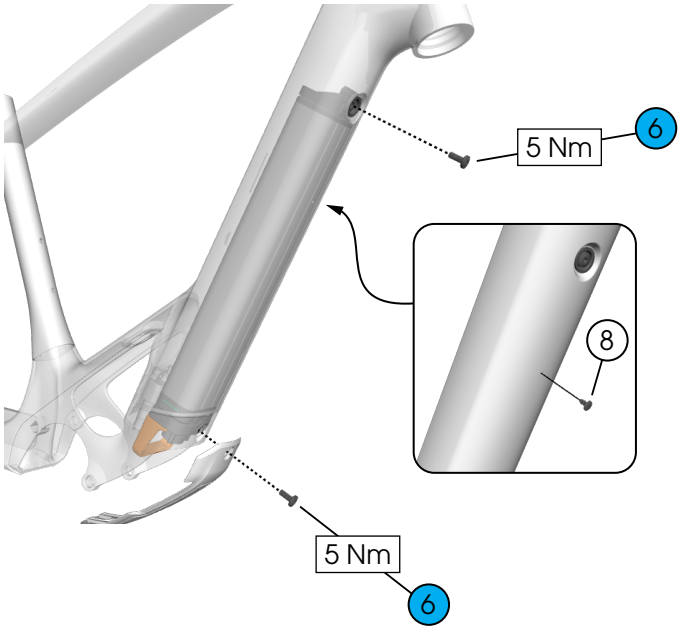

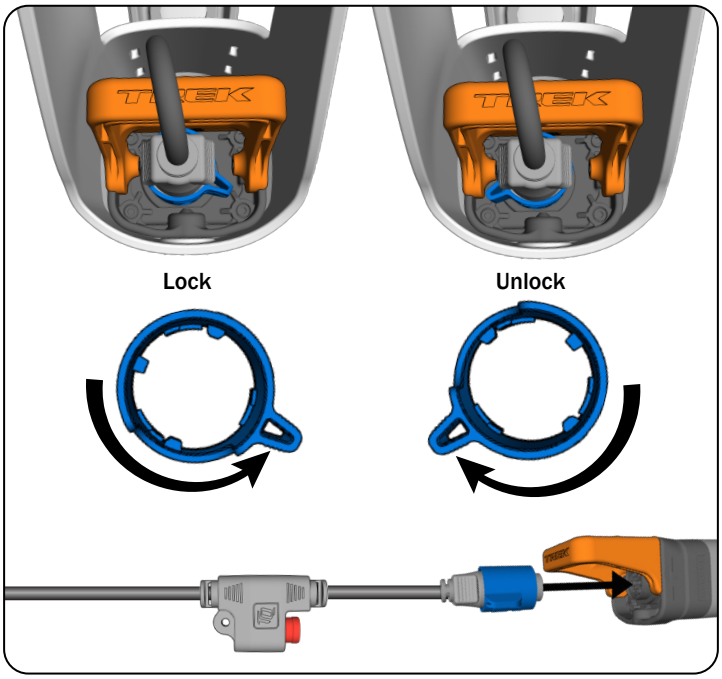

1. Fasteners (M4 x 12 mm) — 2.5
2. End cap, lower — *W5273187*
3. End cap handle — *W5273188*
4. Fasteners (M4 x 8 mm) — T10 — *W581747*
5. End cap, upper — *W5298492*
6. Fastener (M6 x 20 mm) — 4 — *W5275266*
7. Battery, 360 Wh — *5289554*
8. Plug — *W5297943*

Charge port cover

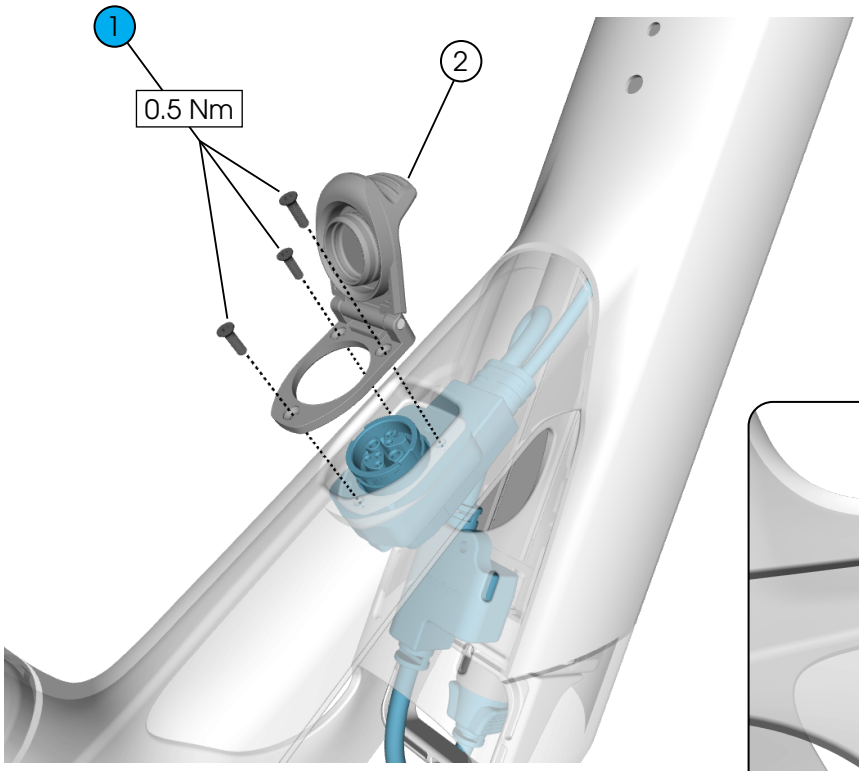

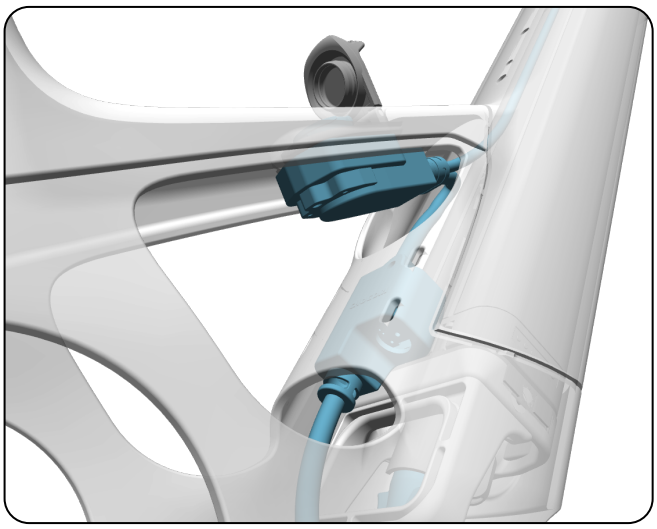

1 Fasteners (M2.5 x 8 mm)

2 Charge port cover

T8 — *5289578*

Drive unit bolts

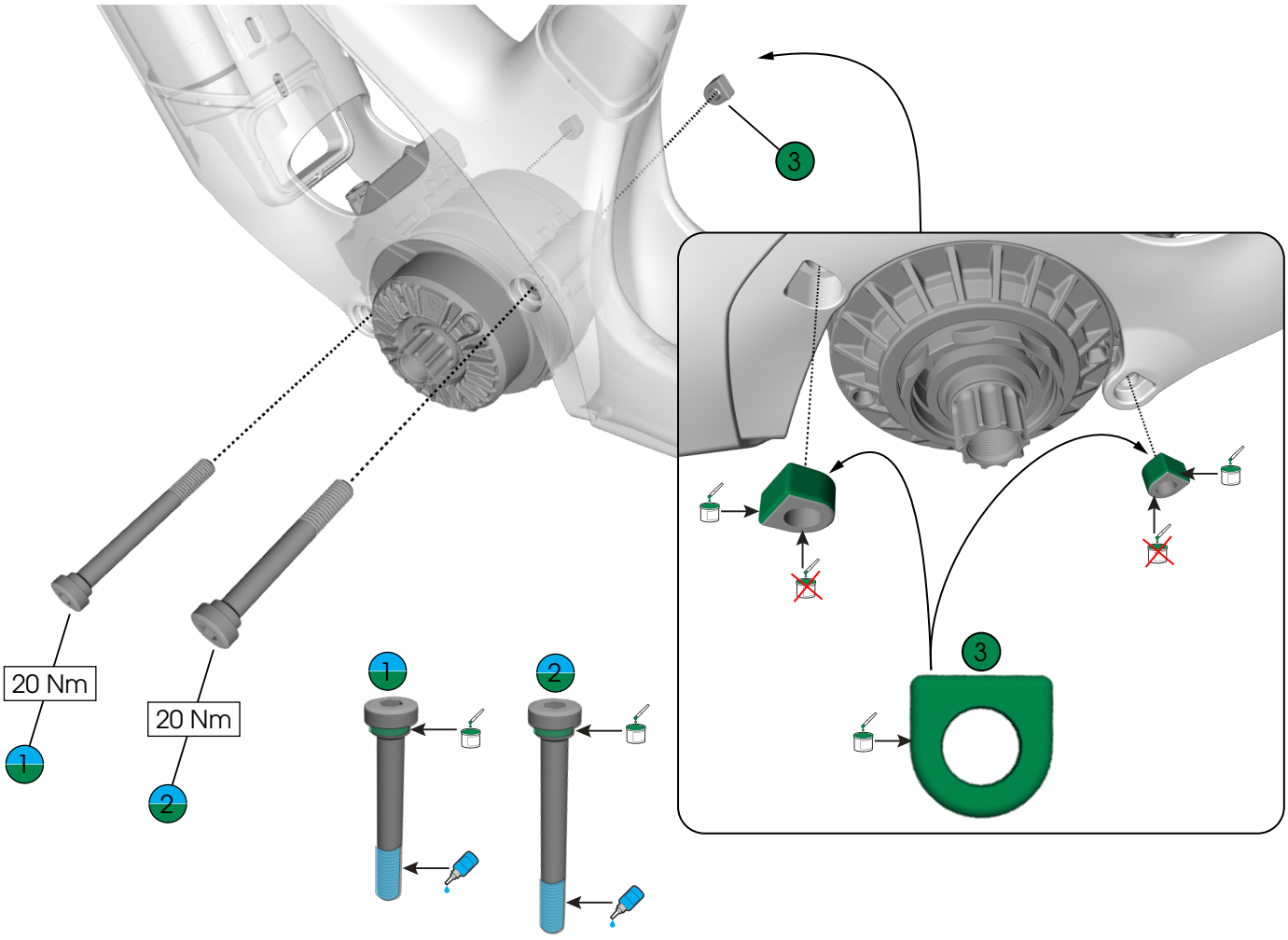

1 Drive unit bolt (M8 x 62 mm) — 6
2 Drive unit bolt (M8 x 73 mm) — 6
— *5289570*
3 Nut inserts (M8) — *W5304866*

Removing the drive unit

NOTICE: Before removing the drive unit bolts, unplug the speed sensor and drive unit cables.

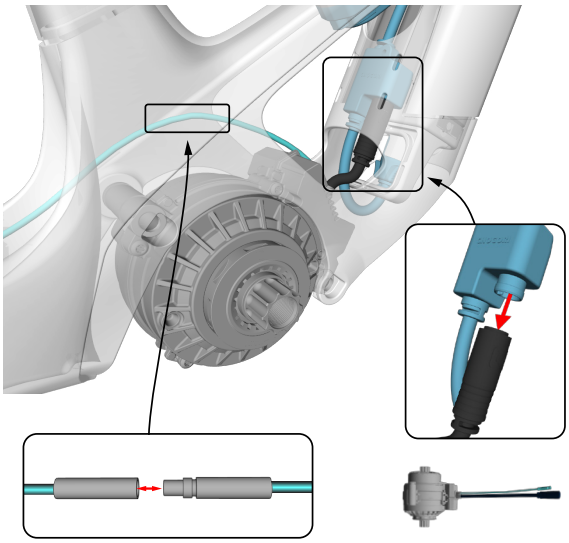

Rear rack and fender

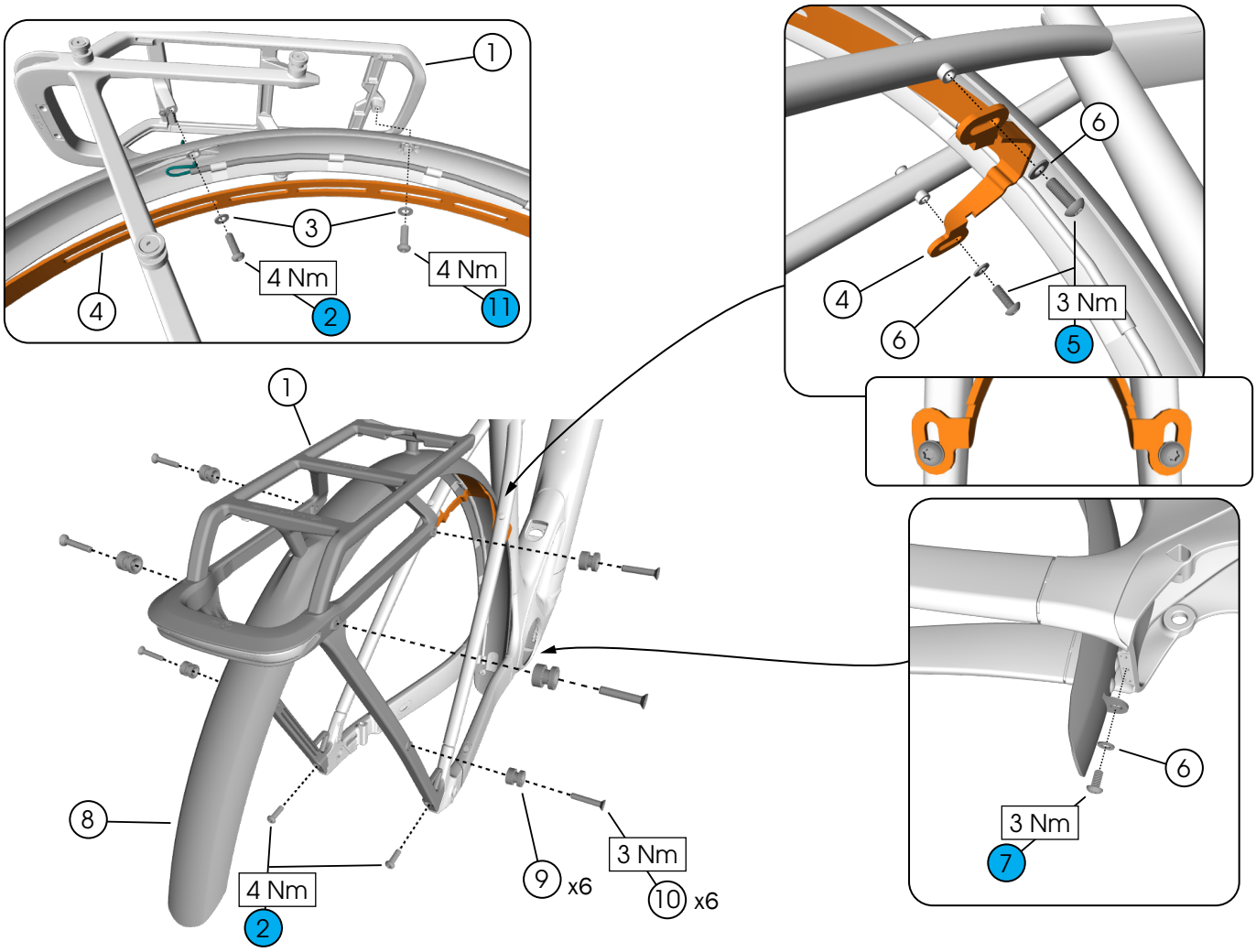

1. Rear rack — *W5316704*
2. Fasteners (M6 x 20 mm)
3. Washers (M6)
4. Fender strut — *W5317982*
5. Fasteners (M5 x 14 mm)
6. Washers (M5) — *W521137*
7. Fastener (M5 x 10 mm)
8. Rear fender — *W5315129*
9. Studs
10. Fasteners (M5 x 25 mm)
11. Fasteners (M6 x 16 mm)

5 — *5317303*

3 — *W5314651*

T25 — *5317306*

4

5 — *5317313*

Removing the rack

NOTICE: Before removing the rear rack and fender, disconnect the rear light wire in the drive unit shell.

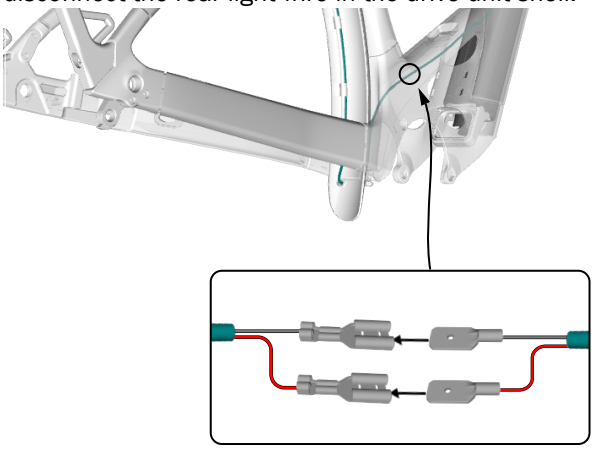

Install the rear rack and fender

1. Install the rack.

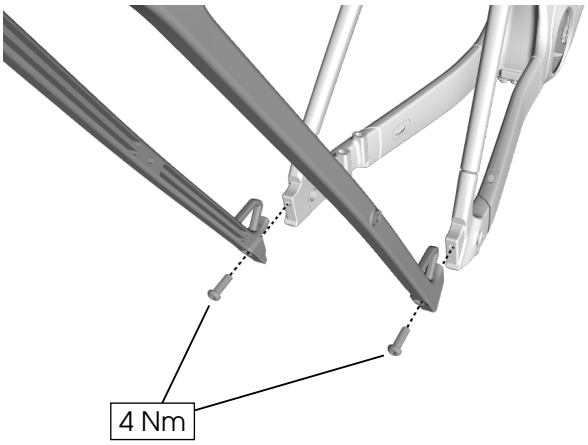

2. Install the fender.

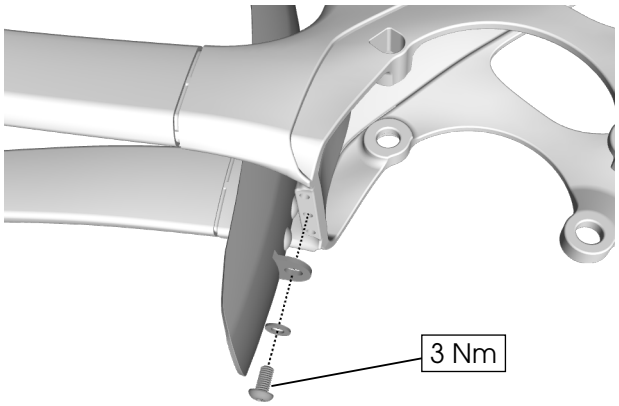

3. Install the fender strut in the highest position.

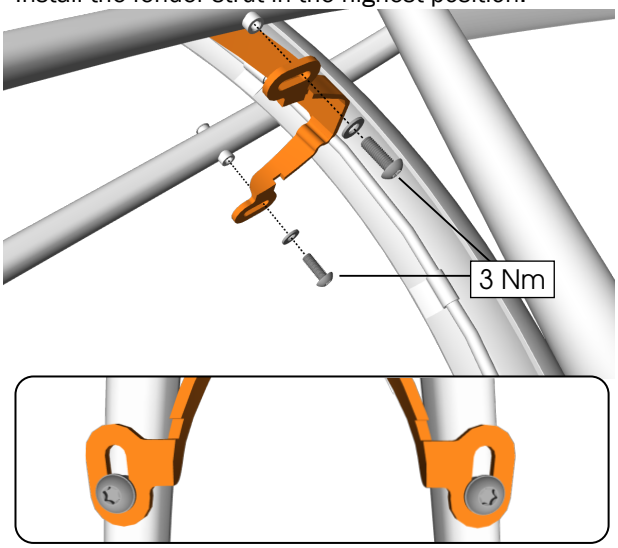

4. Attach the fender strut to the rack and fender.

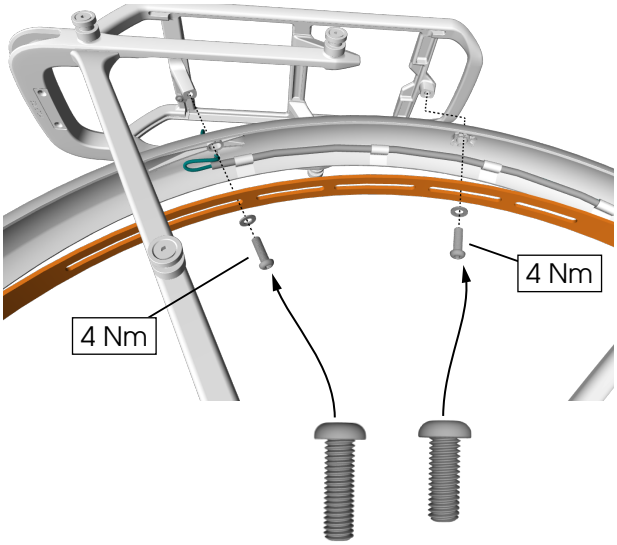

Front fender

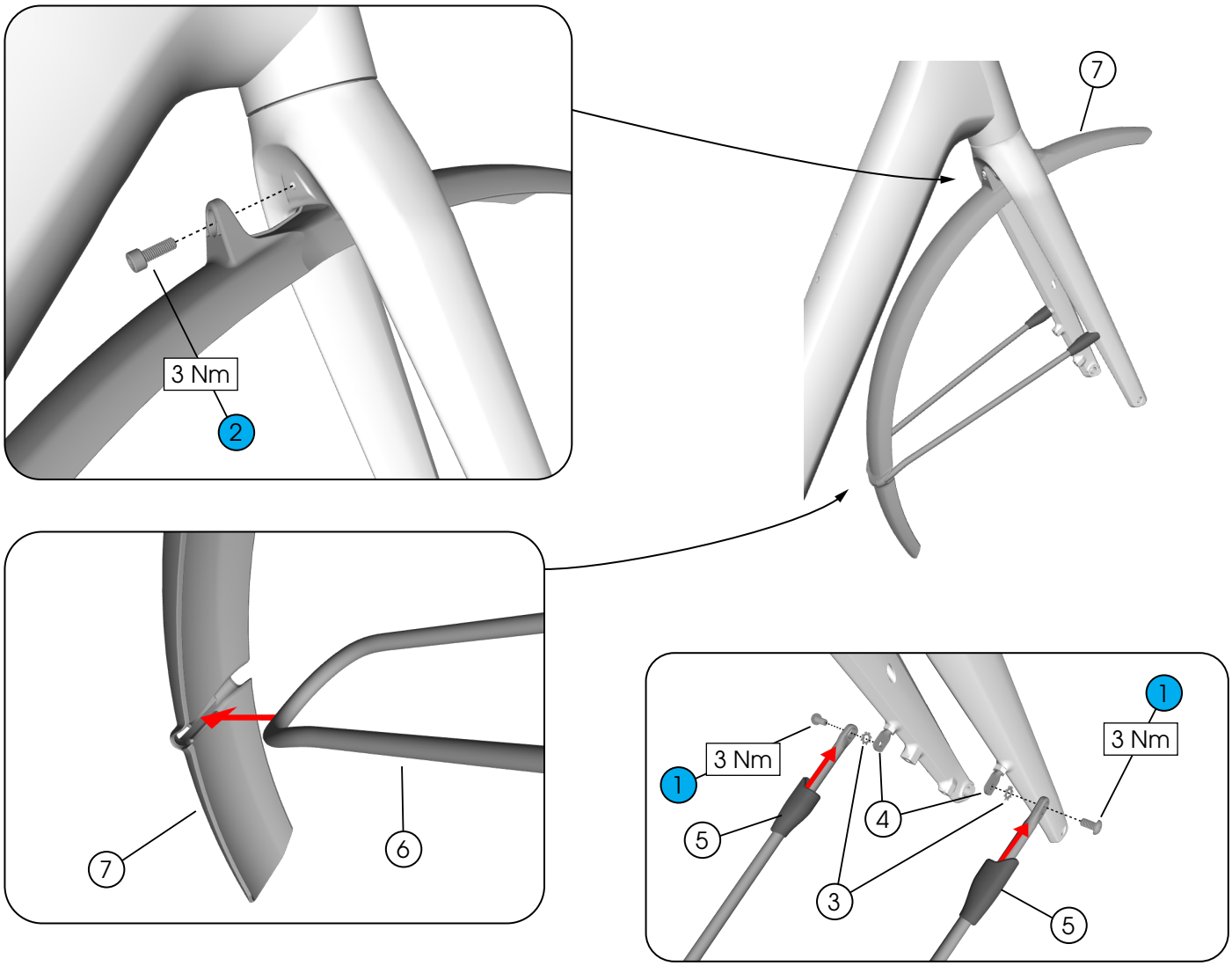

1. Fasteners (M5 x 10 mm)
2. Fastener (M5 x 14 mm)
3. Serrated washers (M5)
4. Bolt-nuts — *W317707*
5. Bolt covers — *W5318959*
6. Fender stay — *W5317845*
7. Front fender — *W5315130*

3 — *5317306*

4 — *5317304*

Ring lock

NOTE: Ring locks are sold aftermarket.

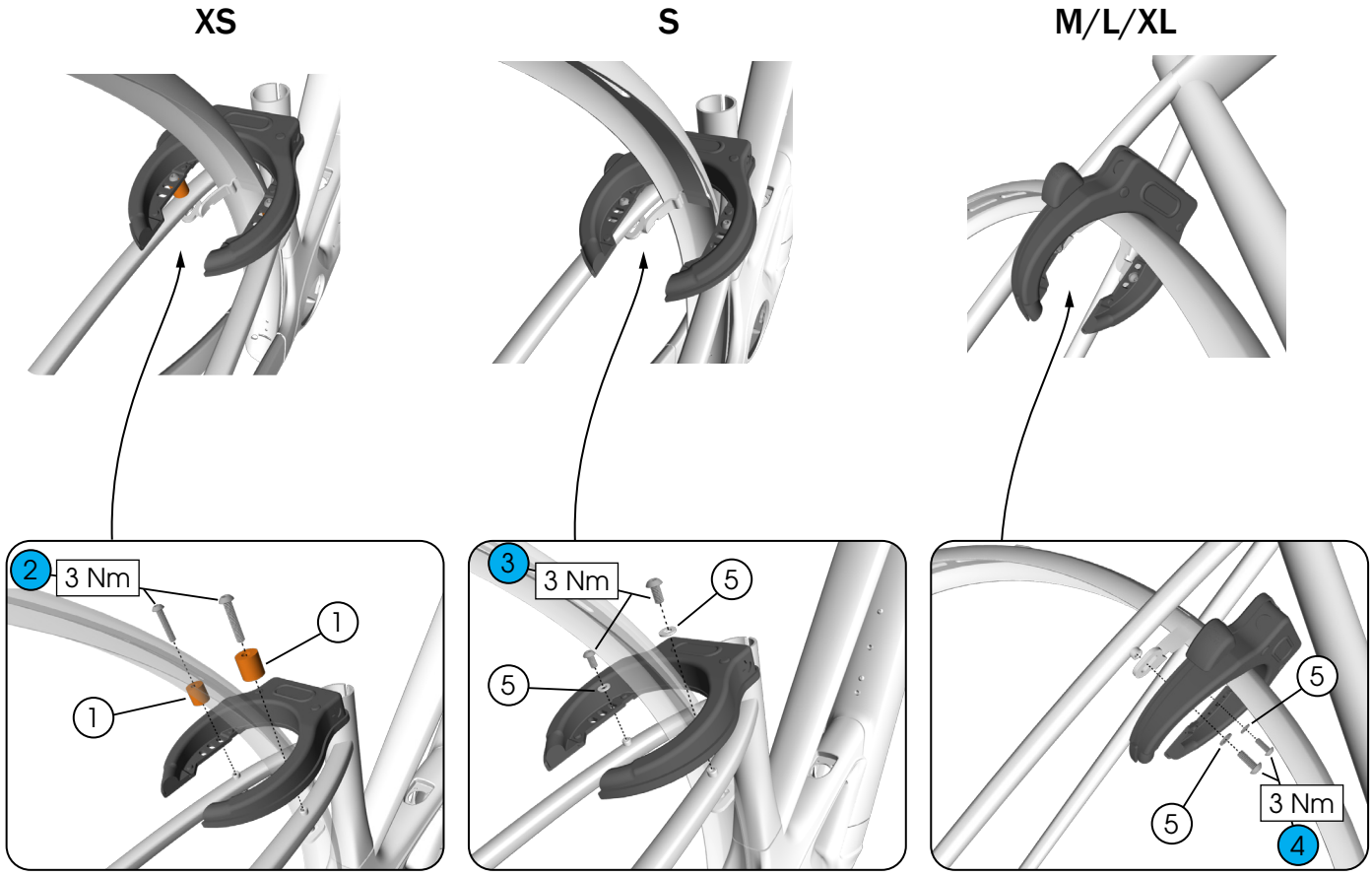

1. Spacers (15 mm)
2. Fasteners (M5 x 25 mm) — 4
3. Fasteners (M5 x 10 mm) — 4
4. Fasteners (M5 x 14 mm) — T25
5. Washers (M5)
6. Plugs (M5) — *W308963*
7. Ring lock — *W5288855*

XS/S frames only

Remove plugs for ring lock installation.

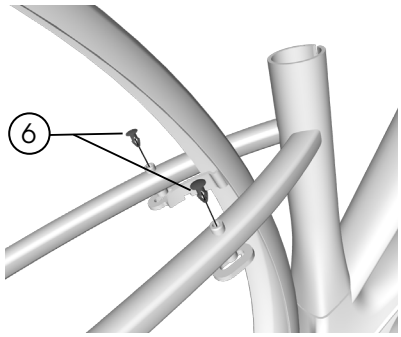

Rear derailleur hanger

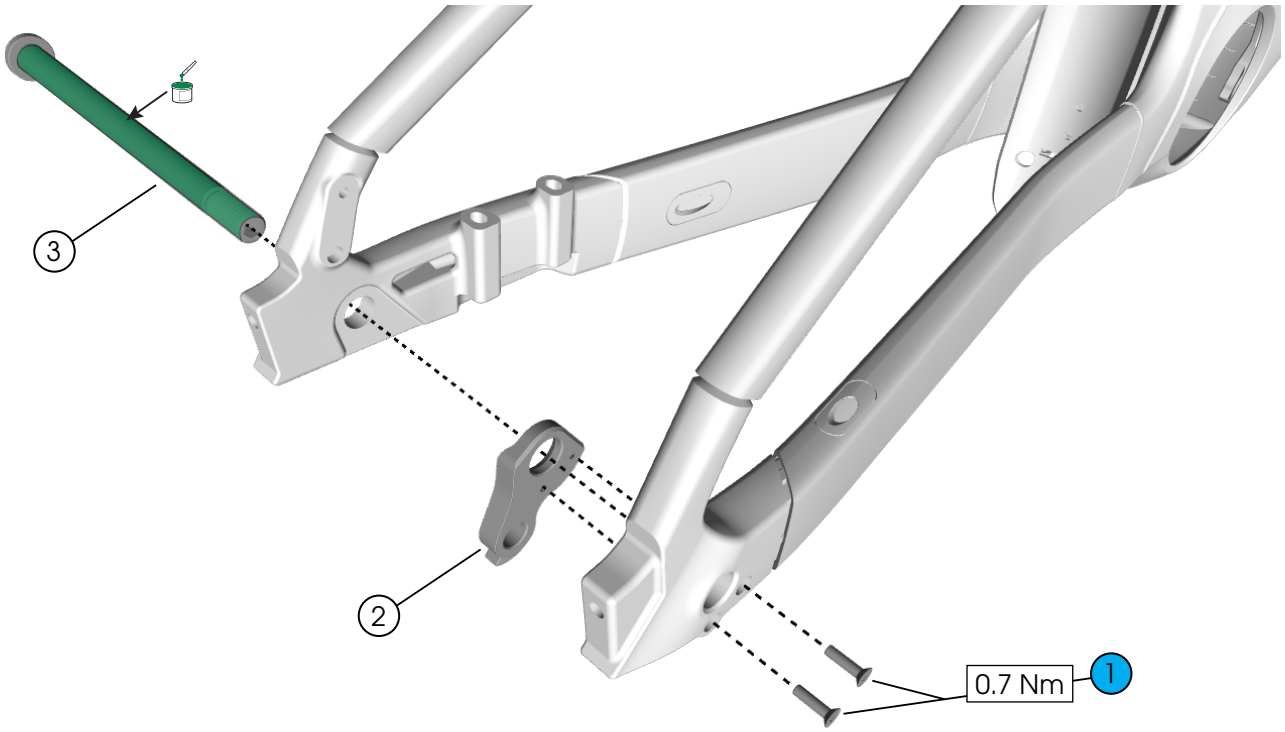

1 Fasteners (M3 x 12 mm) 2.5 — *W524884*

2 Derailleur hanger — *W5281894*

3 Thru axle (165 mm) — *W572054*

Range extender

NOTE: Range extenders are sold aftermarket.

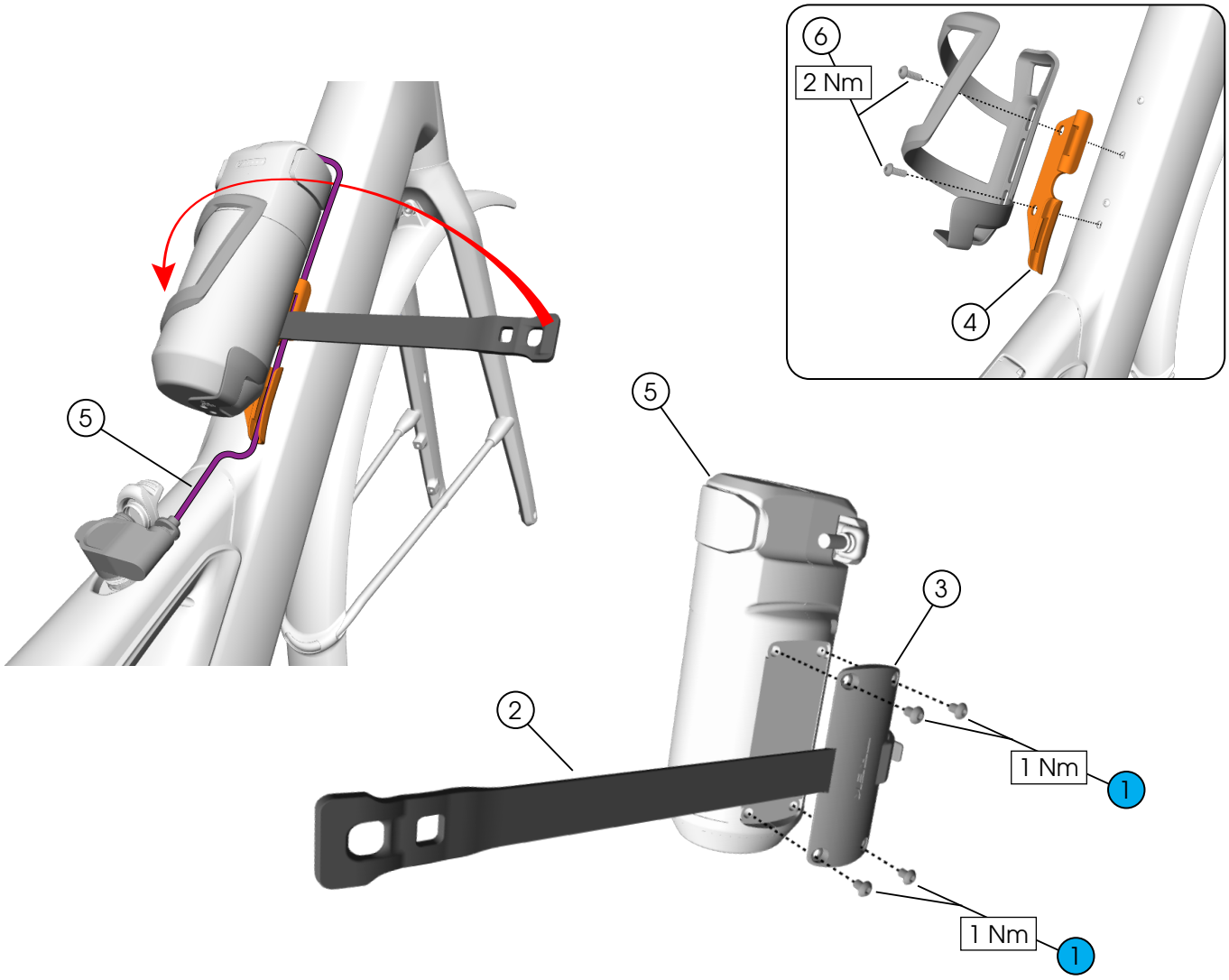

1. Fasteners (M3 x 5 mm)
2. Strap
3. Back plate

3 — *5299107*

4. Cable guide — *W5300001*
5. Cable — *5289576*
6. Fasteners (M5 x 10 mm) — *W297411*
7. Range extender battery — *5289555*

Specifications

Frame

		FX+ 7
Hub OLD	Front	100 mm
	Rear	142 mm
Fork steerer tube OD	Upper	28.6 mm
	Lower	28.6 mm
Brake rotor diameter min/ max	Front	180 mm
	Rear	180 mm
Chainstay brake mount thickness		25 mm
Tire width max 700c		*40 mm
Dropper post compatible		Yes
Chainline		50 mm
Max chainring teeth		46T

**as measured when the tire is seated on the rim*