

2025 FX+ 1

SERVICE MANUAL

Contents

Routing



Routing — brake and shift



Routing — e-system

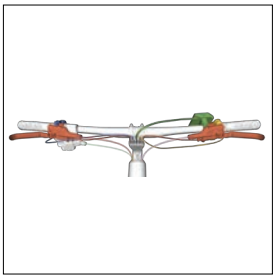

Routing — cockpit/headset

E-system

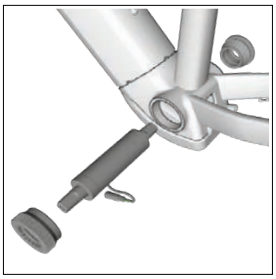

Torque sensor/bottom bracket

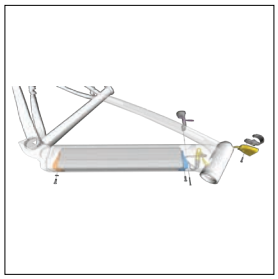

Battery, EasyMag Charger, and junction box



Controller and cover

Frame

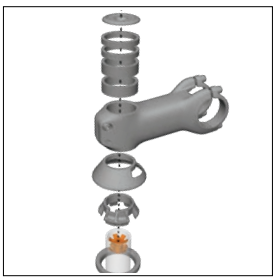

Headset and stem

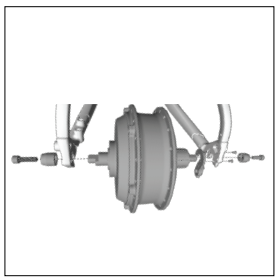

Axles

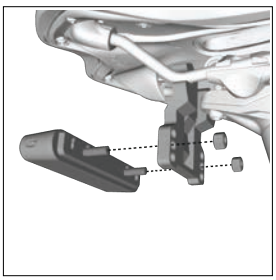

Light mounting



Frame parts

Copyright 2025 Trek Bicycle Corporation All Rights Reserved

About this manual

Scope

This manual contains parts diagrams, specifications (such as grease and torque values), instructions, part numbers, and helpful tips. It does not contain instructions for all components (such as brake calipers). Refer to the original manufacturer for more information.

Replacement parts

Trek recommends using only Trek OEM (original manufacturer) replacement parts.

Additional info

- Bicycle Owner's Manual: trekbikes.com/manuals
- Hyena Throttle Quick Start Guide: trekbikes.com/manuals
- Hyena Throttle Comprehensive Owner's Manual: trekbikes.com/manuals
- Hyena Manuals: hyena-ebike.com

Inspect the bike

Please inspect the e-bike carefully after removal from the box and all packaging:

- Inspect all surfaces of the e-bike for damage, pay special attention to the fork legs and the seat stays (both inside and outside surfaces).
- If packaging damage is located near the front of the e-bike, remove the fork from the frame and inspect the steerer tube for damage.

3D interactive graphics

Click the icon in this manual to view interactive models.

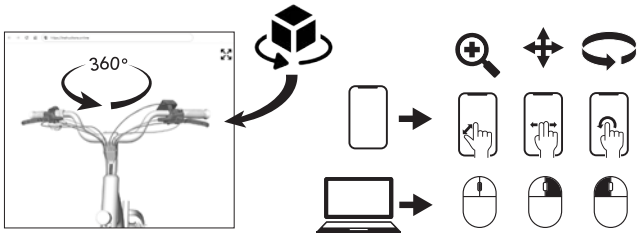

Legend


Cable (zip) tie

Nm Torque value

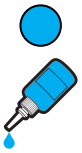
Apply appropriate threadlocker


Apply Bontrager grease

Safety

WARNING

Properly tighten hardware

Always tighten hardware to the specified torque. Over-tightening hardware could deform or break the hardware or components. Under-tightening or over-tightening hardware could cause hardware or components to become loose. Either situation could damage the bicycle and result in injury to the rider.

WARNING

Reapply threadlocker

All reused-fasteners with pre-applied threadlocker must be cleaned with isopropyl alcohol and have new threadlocker applied before re-assembly. If threadlocker is not applied, the fasteners may loosen which could damage the bicycle and result in injury to the rider.

Routing — brake and shift

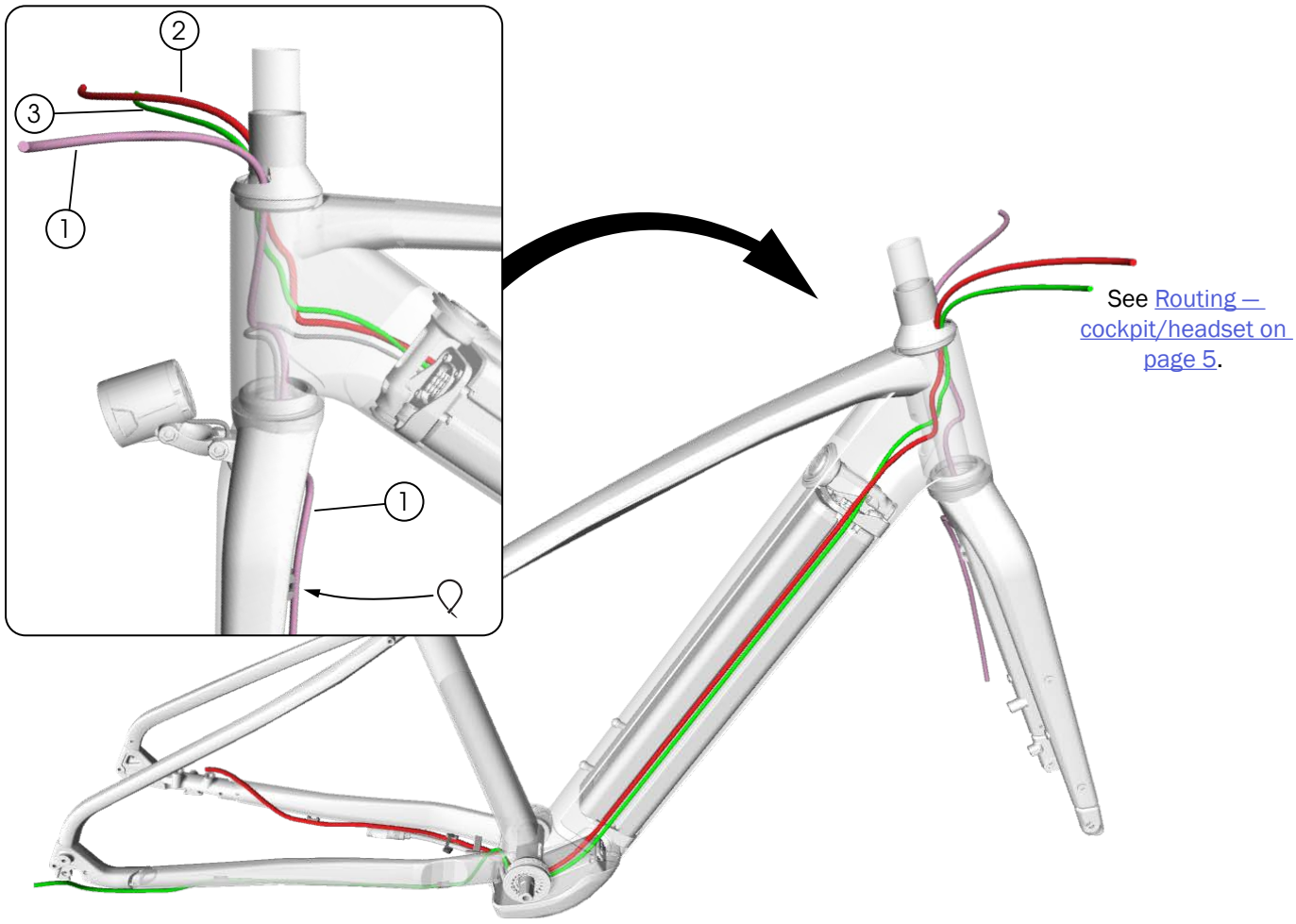

See Routing — cockpit/headset on page 5.

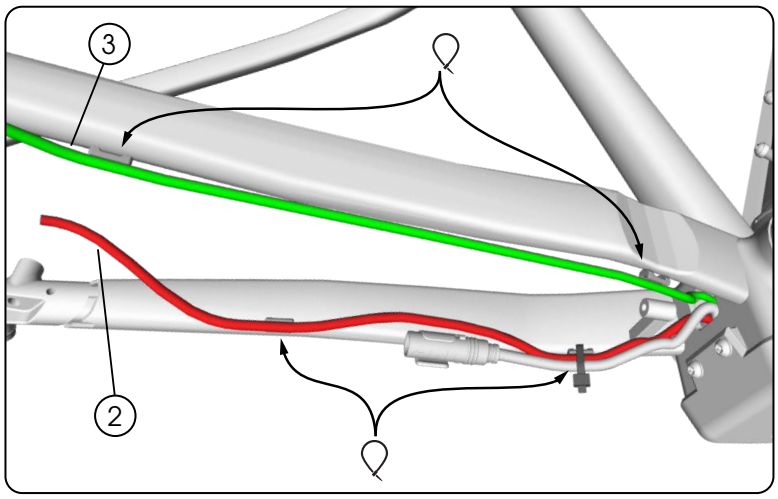

1. Front brake hose
2. Rear brake hose
3. Rear derailleur cable

Routing — e-system

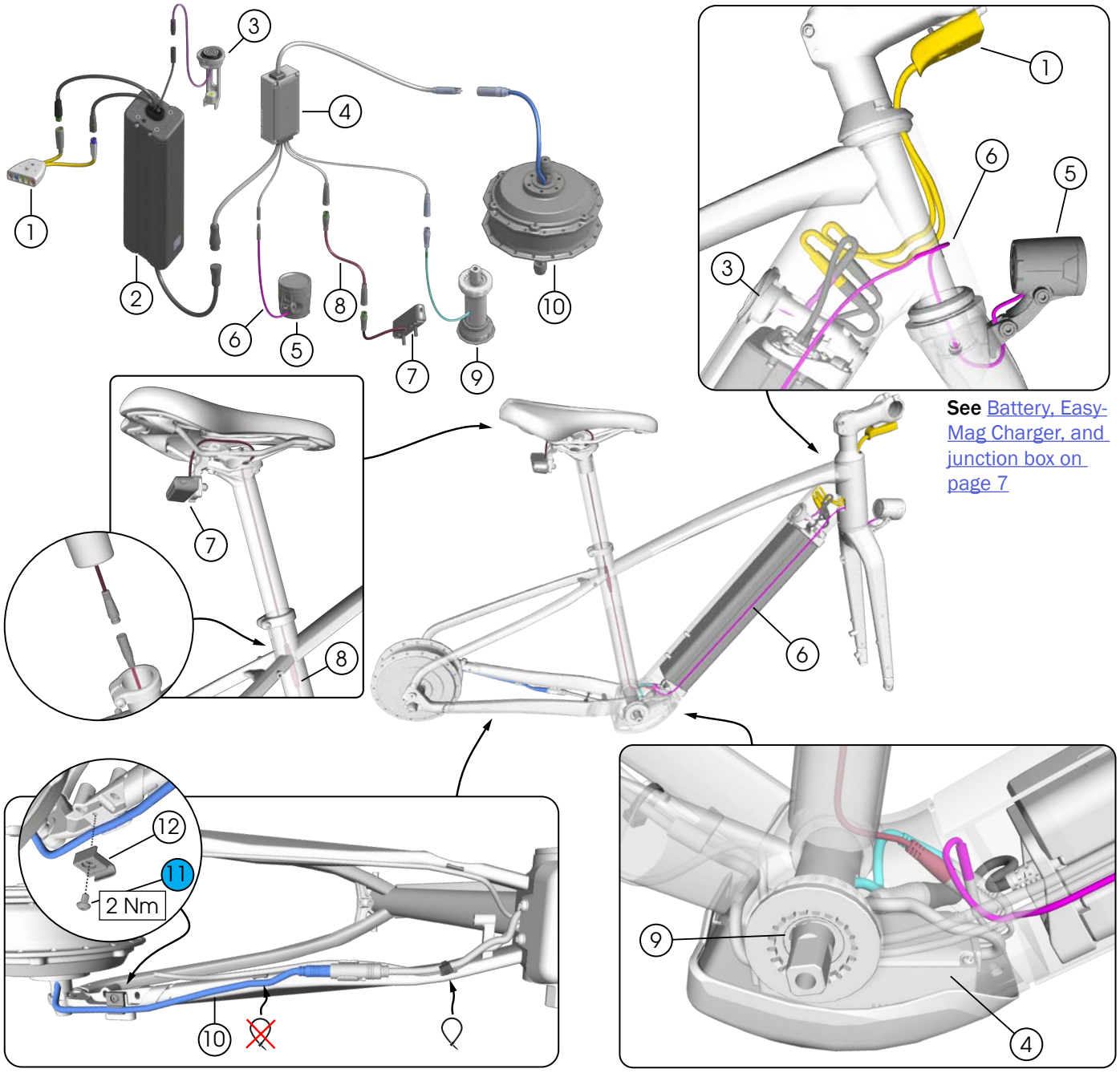

See Battery, Easy-Mag Charger, and junction box on page 7

1. Junction box — *5329963*
2. Battery (BP-TR23A) — *5329958*
3. EasyMag Charger — *W5330831*
4. Controller (DU-TR24A) — *5329959*
5. Front light — *598624*
6. Front light wire — *W5331328*
7. Rear light and cable — *W5331845*
8. Rear light cable (625 mm) — *W5331844*
9. Torque sensor (ST-SQ-1) — *5329960*
10. Hub motor (MRC-TR24A)
11. Fastener (M4 x 6 mm) — *5284388*
12. Cable guide

Routing — cockpit/headset

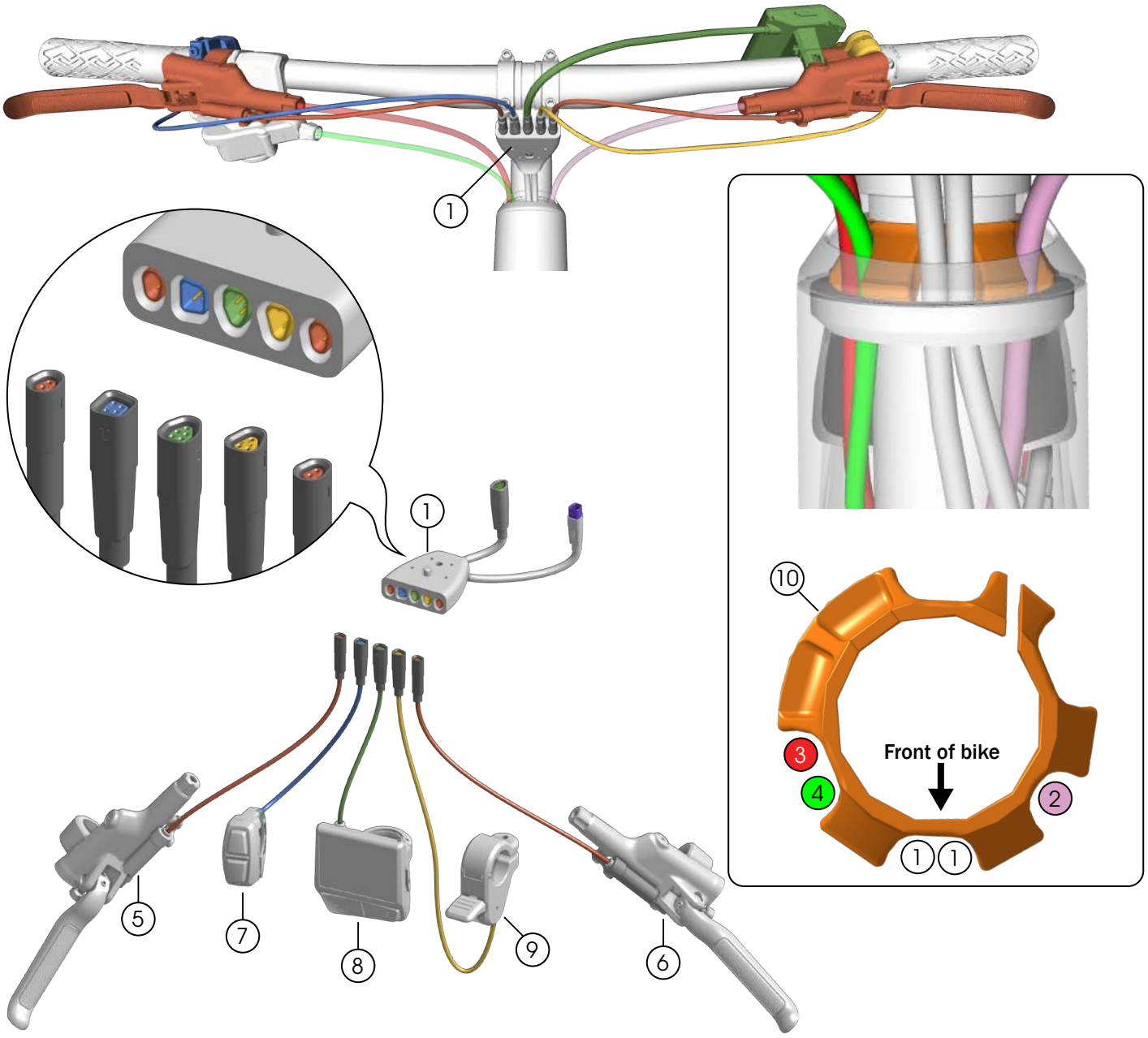

1. Junction box — *5329963*
2. Front brake hose
3. Rear brake hose
4. Rear derailleur cable
5. Rear brake lever — *5340132*
6. Front brake lever — *5340131*
7. Turn signal — *W5330973*
8. Remote/HMI — *5329964*
9. Throttle — *W5330531*
10. Split ring — *W5326403*

Torque sensor/bottom bracket

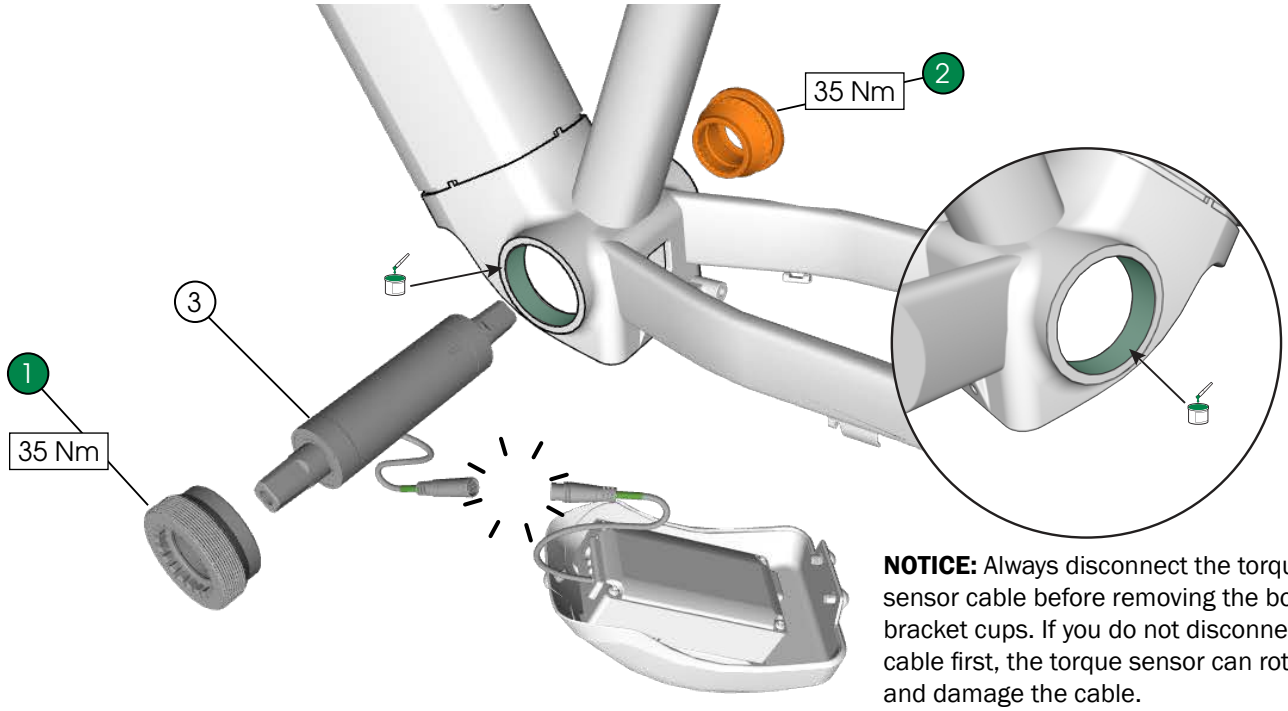

NOTICE: Always disconnect the torque sensor cable before removing the bottom bracket cups. If you do not disconnect the cable first, the torque sensor can rotate and damage the cable.

1. Non-driveside cup
2. Driveside cup
3. Torque sensor/bottom bracket

20T
20T
5329960

Install

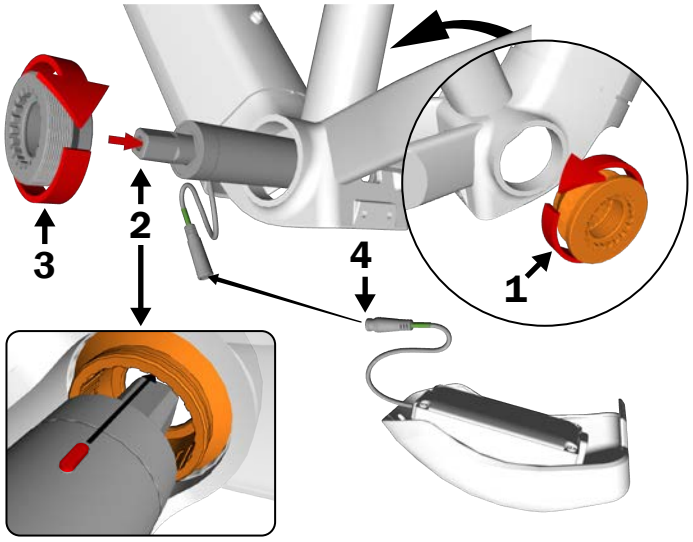

Remove

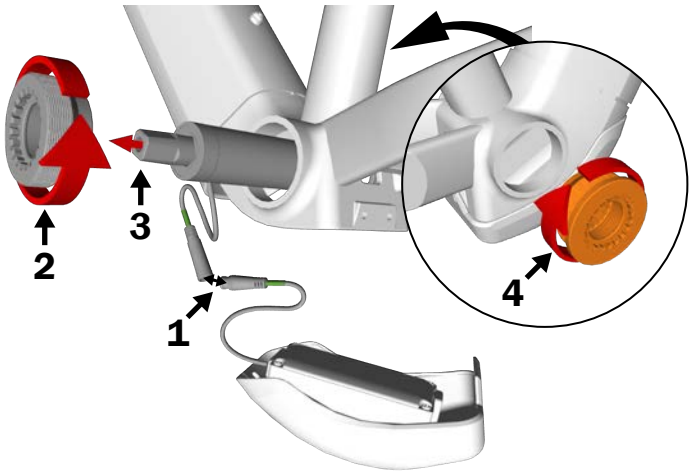

Battery, EasyMag Charger, and junction box

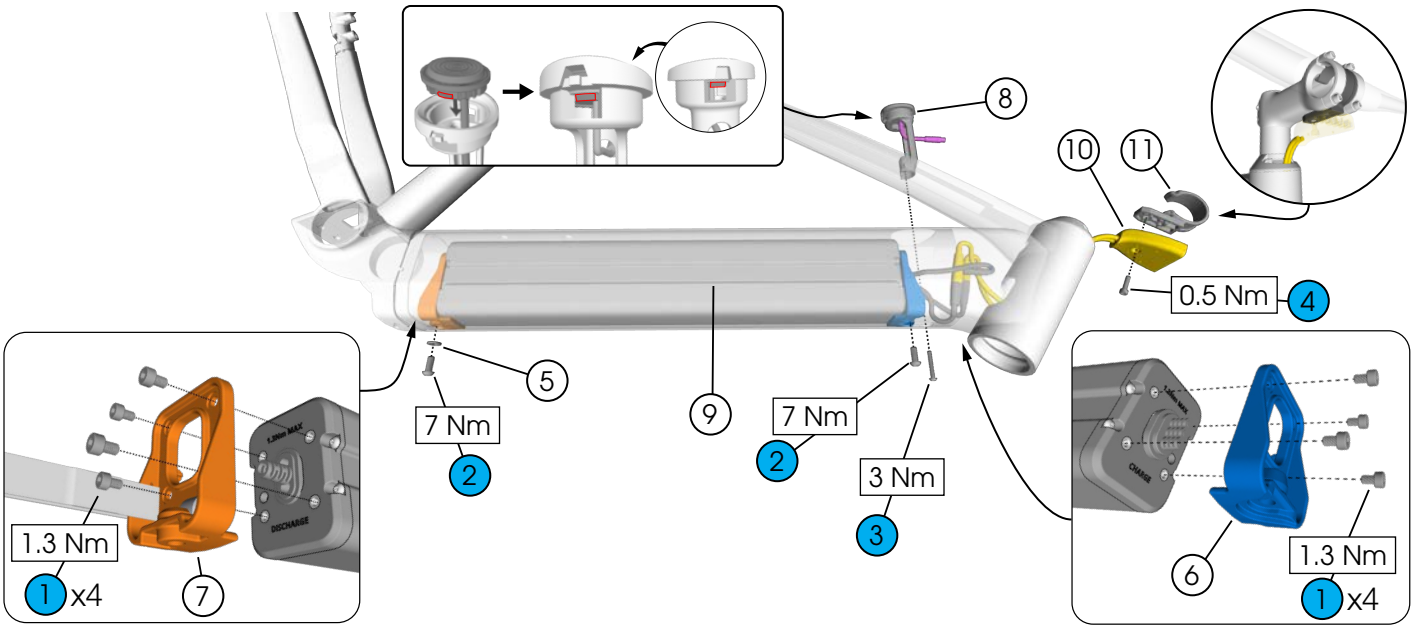

1. Fasteners (M4 x 6 mm)
2. Fasteners (M6 x 14 mm)
3. Fastener (M4 x 25 mm)
4. Fastener (M4 x 16 mm)
5. Washer (M6)

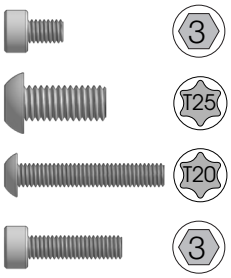

6. Upper end cap — *W5326161*
7. Lower end cap — *W5326160*
8. EasyMag Charger — *W5330831*
9. Battery (BP-TR23A) — *5329958*
10. Junction box — *5329963*
11. Blendr mount — *W5330874*

Install

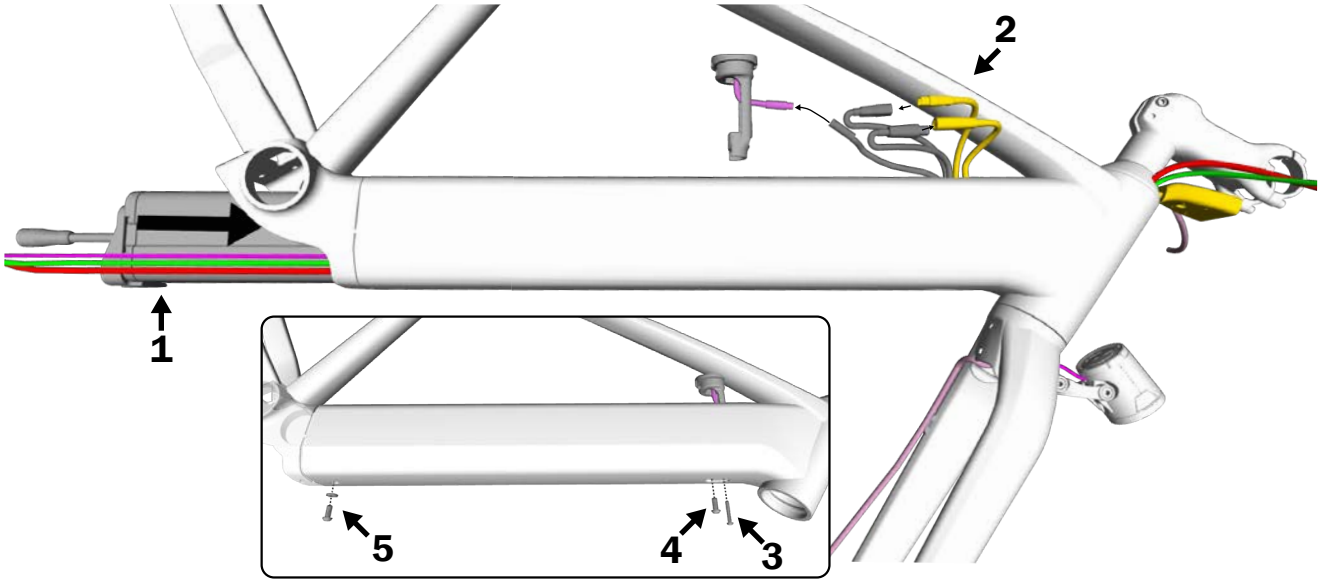

Controller and cover

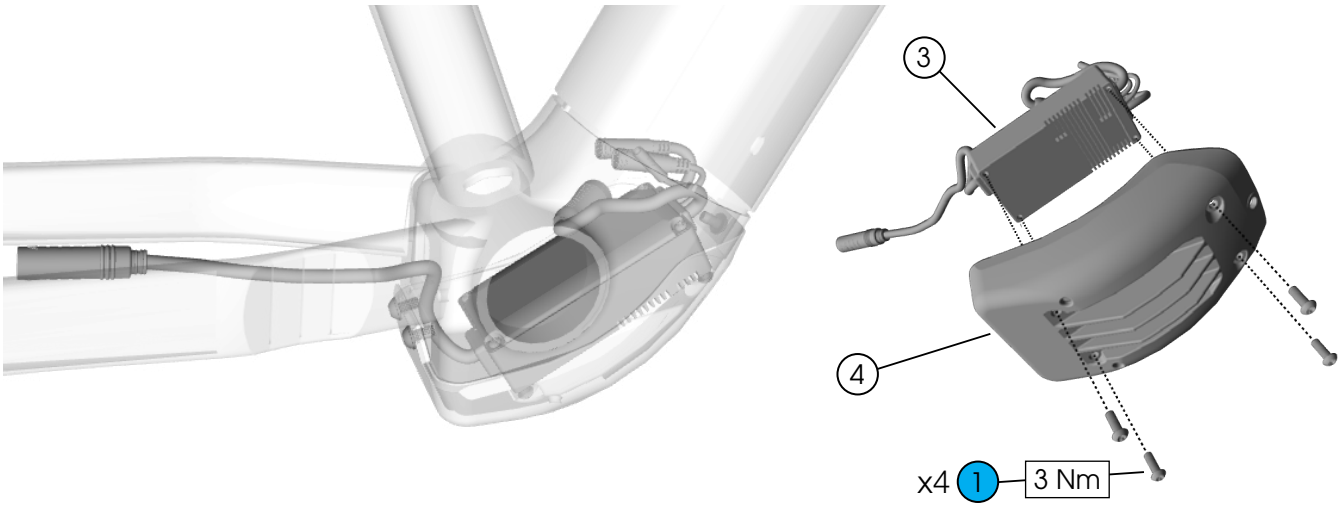

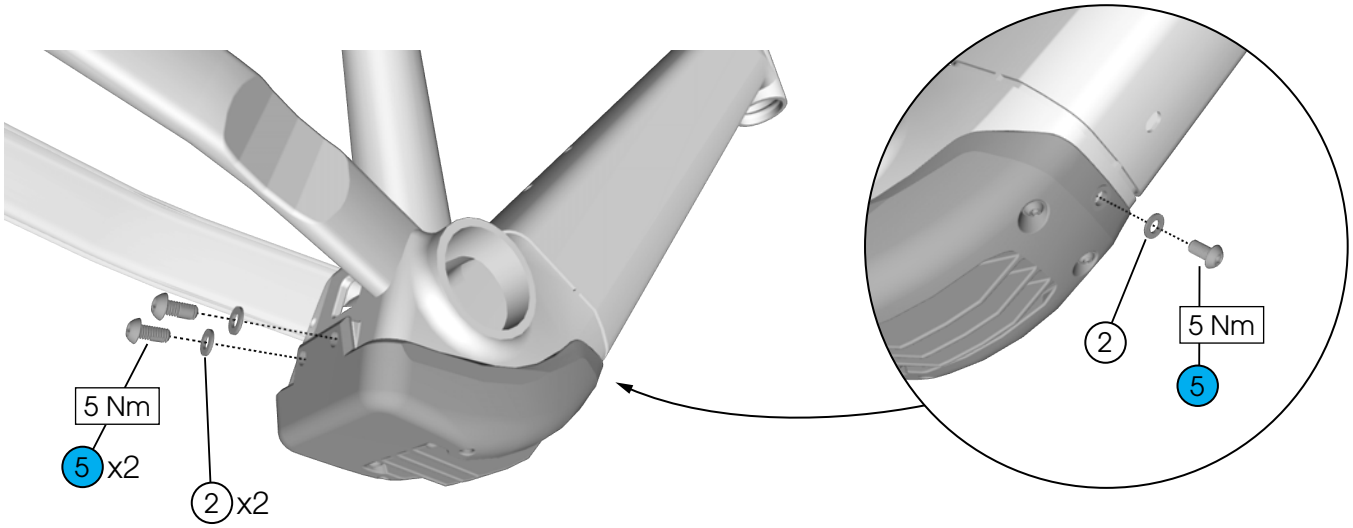

1. Fasteners (M4 x 12 mm) 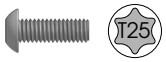

2. Washers (M5) — *5317316*
3. Controller (DU-TR24A) — *5329959*
4. Cover — *W5330475*
5. Fasteners (M5 x 10 mm) 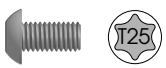

Headset and stem

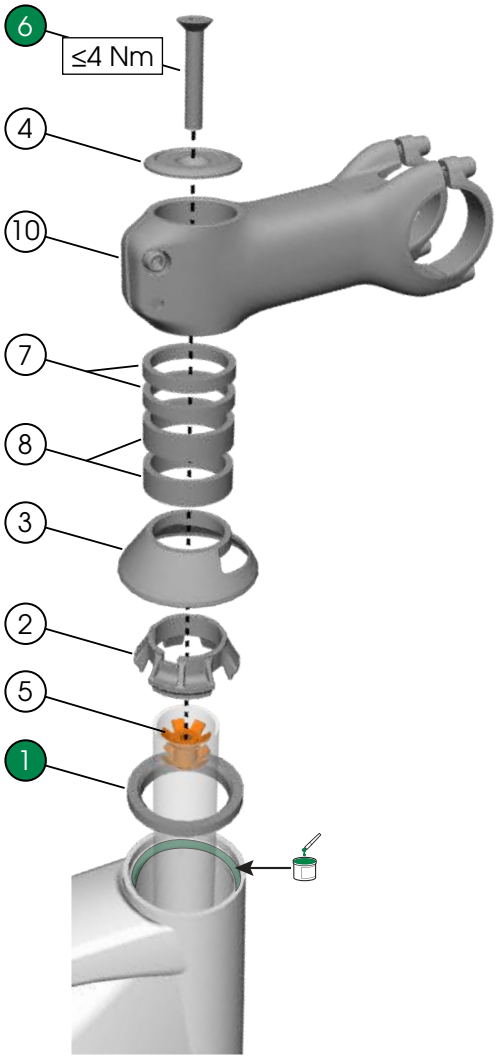

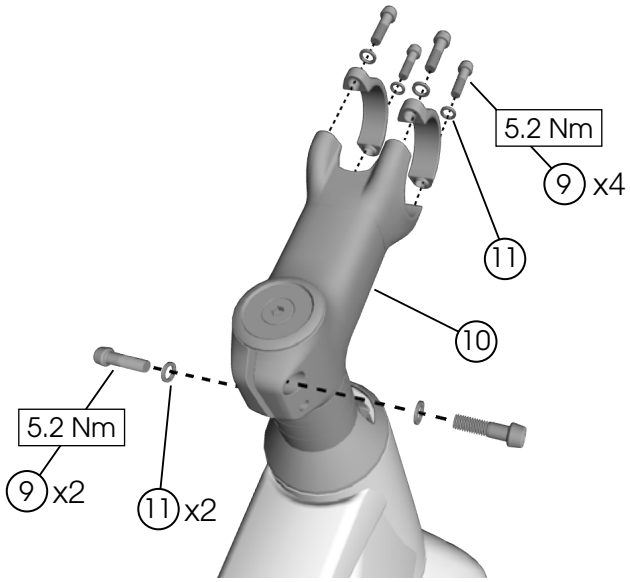

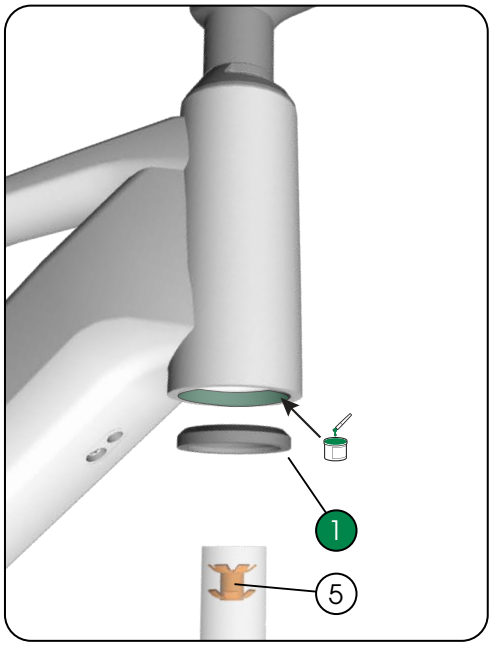

1. Bearings — *W532843*
2. Split ring — *W5326403*
3. Routing top cover — *W5260269*
4. Top cap
5. Compression nut
6. Fastener (M6 x 35 mm)  4

547432

7. Spacers (5 mm) — *5253928*
8. Spacers (10 mm) — *5253929*
9. M6 x 18 mm — *W582092*  5
10. Stem (90 mm)
11. Washers (M6)

587667

Axles

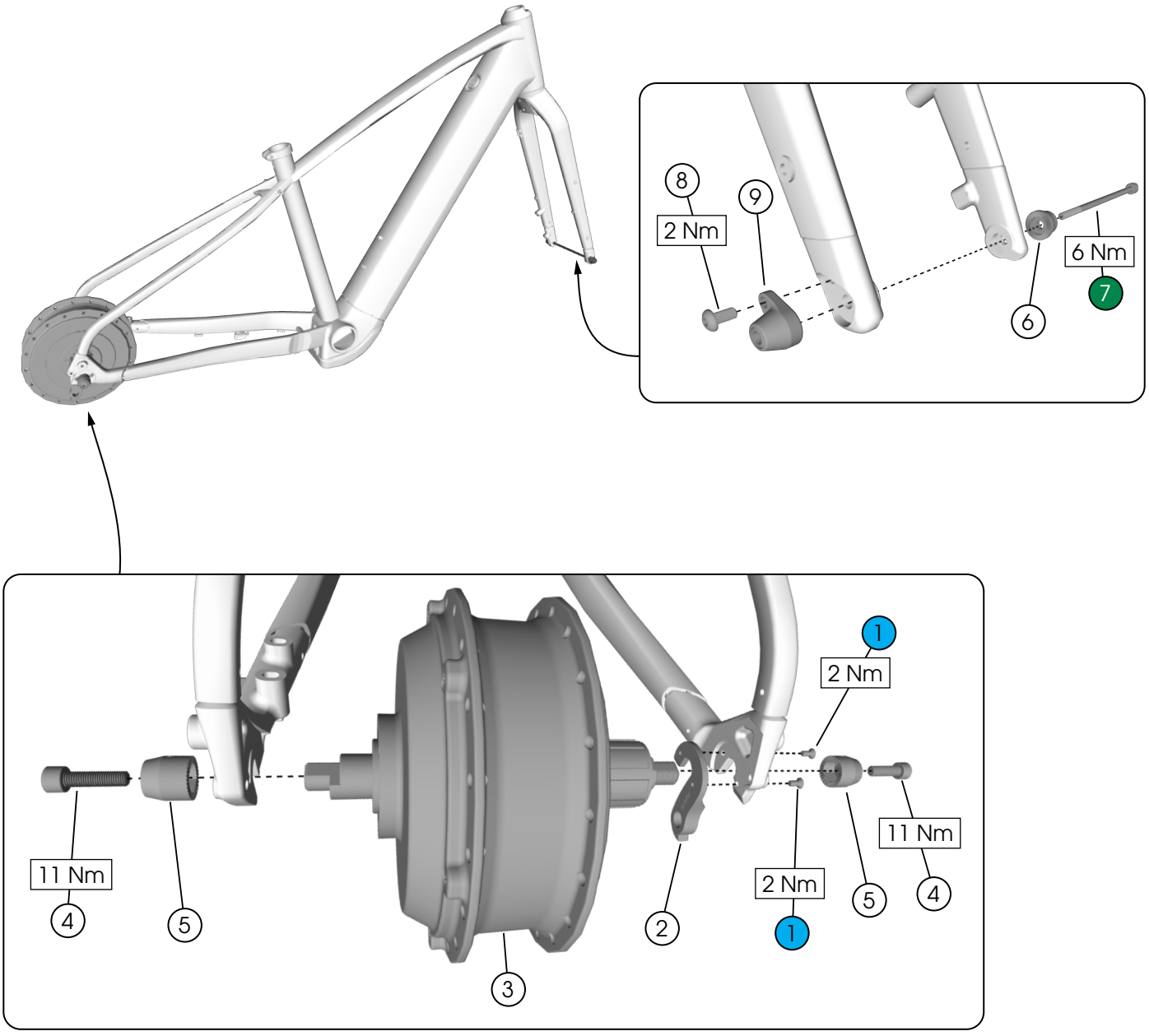

1. Fasteners (M3 x 6.5 mm) — *W318604*  
2. Derailleur hanger — *W5268484*
3. Hub motor (MRC-TR24A)
4. Fasteners (M6 x 20 mm) — *5351001* 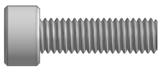
5. End caps
6. Head cap
7. Front skewer (M5 x 132 mm) — *437939* 
8. Fastener (M5 x 8 mm) 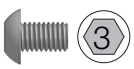
9. Captured nut

5273062

Light mounting

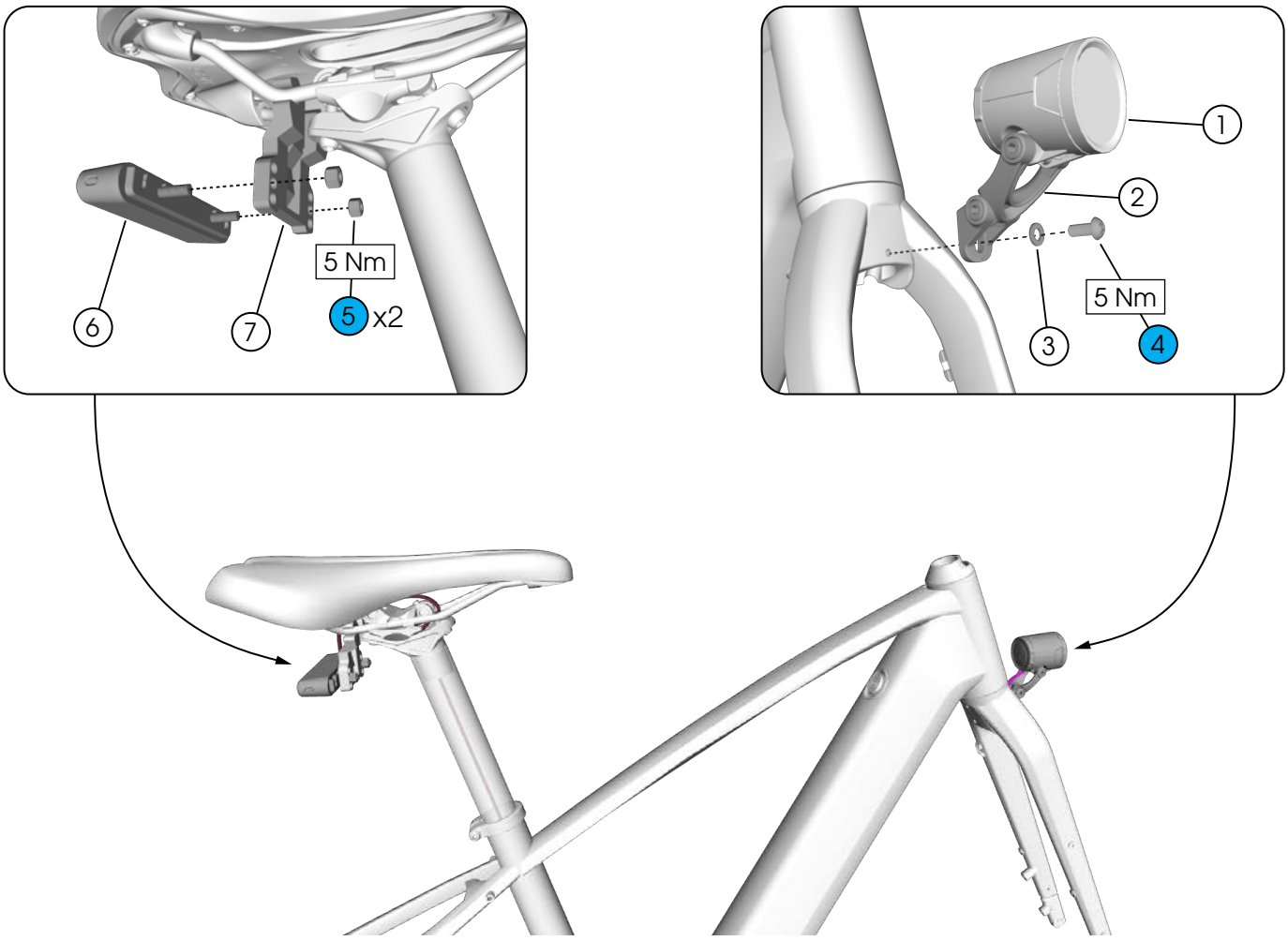

1. Front light — *598624*
2. Front light bracket — *5318940*
3. Washer (M5)
4. Fastener (M5 x mm) 

5. Nylock nuts — *5317577*
6. Rear light and cable — *W5331845*
7. Rear light bracket — *W581598*

Frame parts

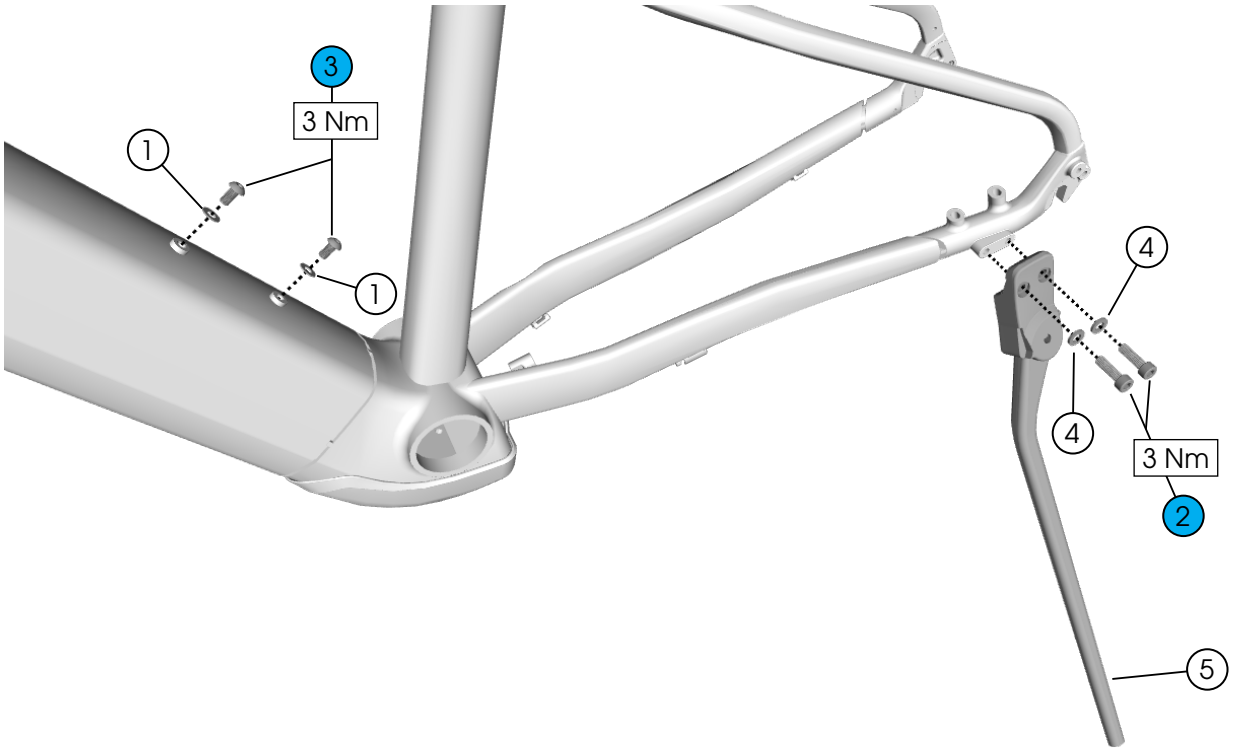

1. Washers (M5) — *W521137*
2. Fasteners (M6 x 20 mm) 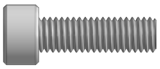 4
3. Fasteners (M5 x 10 mm)  5
4. Washers (M6)
5. Kickstand — *5269176*

Specifications

Hub OLD	Front	100 mm
	Rear	148 mm
Fork steerer tube OD	Upper	28.6 mm
	Lower	28.6 mm
Brake rotor diameter min/ max	Front	180 mm
	Rear	180 mm
Tire width max		50 mm
Dropper post compatible		No
Chainline		50 mm
Max chainring teeth		40 T

**as measured when the tire is seated on the rim*