TREK



FUEL GEN 7

SERVICE MANUAL

Contents

Suspension

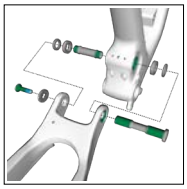

Main pivot

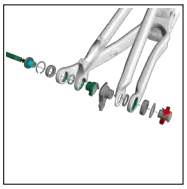

Active Braking Pivot (ABP)

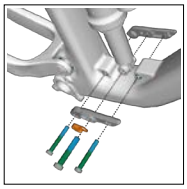

Lower shock mounts

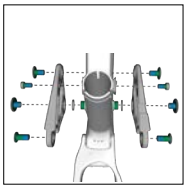

Rocker links

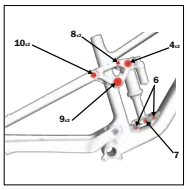

Suspension hardware tightening order

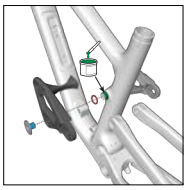

Change rocker links

Routing



Routing — carbon



Routing — alloy

Frame

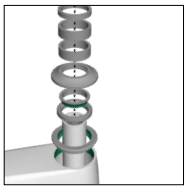

Headset

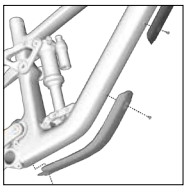

Guards

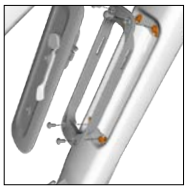

Storage door

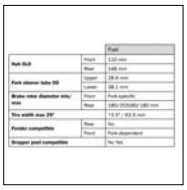

Specifications

Copyright 2025 Trek Bicycle Corporation All Rights Reserved

About this manual

Scope

This manual contains parts diagrams, specifications (such as grease and torque values), instructions, part numbers, and helpful tips. It does not contain instructions for all components (such as brake calipers). Refer to the original manufacturer for more information.

Replacement parts

Trek recommends using only Trek OEM (original manufacturer) replacement parts.

Additional info

Additional manuals are available at Trekbikes.com/manuals.

Inspect the bike

Please inspect the bicycle carefully after removal from the box and all packaging:

- Inspect all surfaces of the bicycle for damage, pay special attention to the fork legs and the seat stays (both inside and outside surfaces).
- If packaging damage is located near the front of the bicycle, remove the fork from the frame and inspect the steerer tube for damage.

Legend


Cable (zip) tie



Torque value

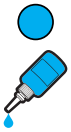
Apply appropriate threadlocker


Apply Bontrager grease

Safety

WARNING

Properly tighten hardware

Always tighten hardware to the specified torque. Over-tightening hardware could deform or break the hardware or components. Under-tightening or over-tightening hardware could cause hardware or components to become loose. Either situation could damage the bicycle and result in injury to the rider.

WARNING

Reapply threadlocker

All reused-fasteners with pre-applied threadlocker must be cleaned with isopropyl alcohol and have new threadlocker applied before re-assembly. If threadlocker is not applied, the fasteners may loosen which could damage the bicycle and result in injury to the rider.

3D interactive graphics

Click the icon in this manual to view interactive models.

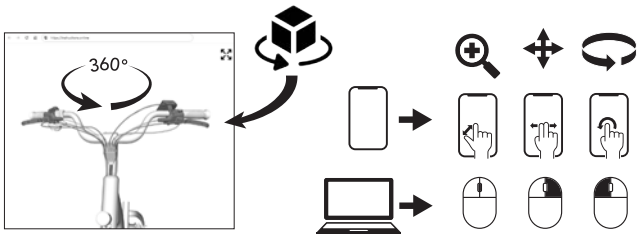

We value your feedback

We hope you find our service manual useful. To help us improve, please take a brief survey about your experience. We periodically update our manuals and your input ensures we provide the highest quality user experience.



For product help or inquiries:

Please visit trekbikes.com/contactus or call Customer Care.

Main pivot

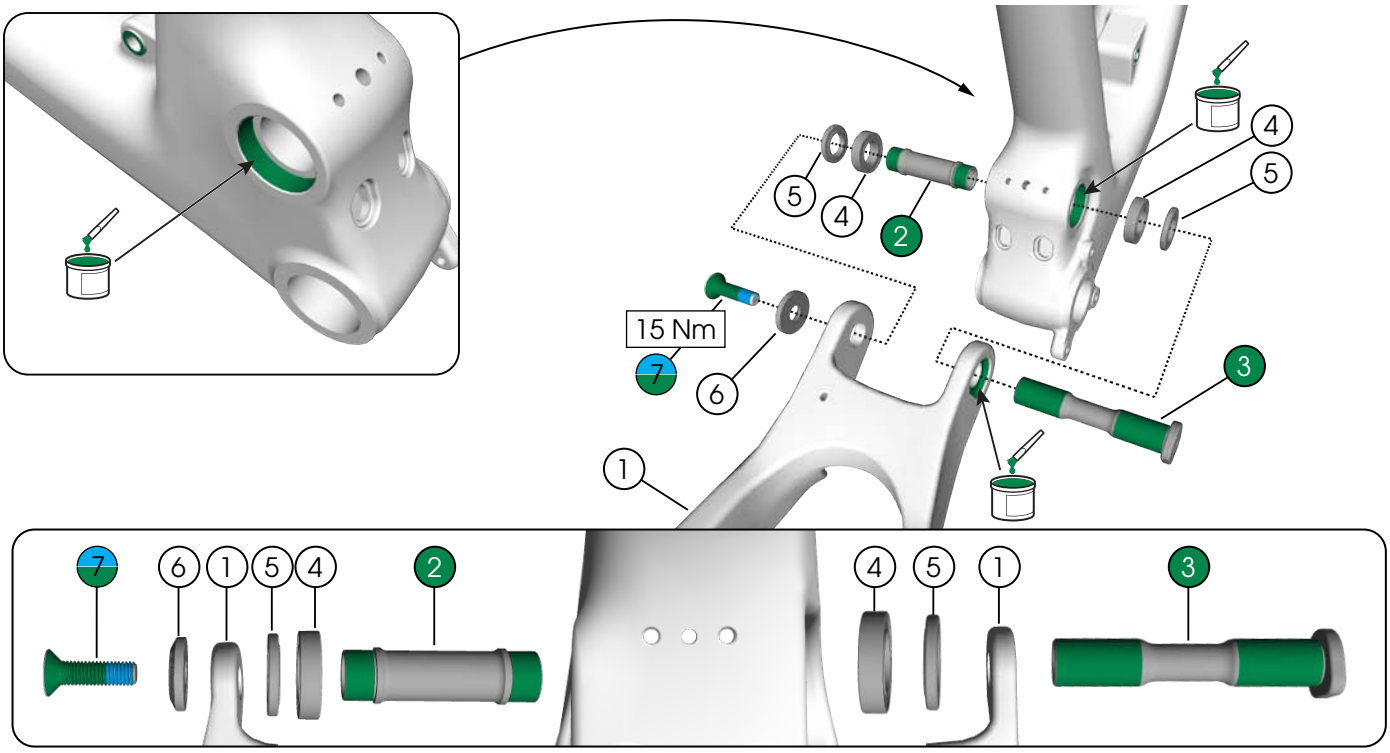

1. Chainstay
   - Carbon (black) — **5342433*
   - Alloy (gray) — **5342437*
2. Bearing spacer — *W5330255*
3. Axle — *W5330256*
4. Bearings (17 mm x 30 mm x 7 mm) — *5290435*
5. Spacers (4 mm width) — *W5305806*
6. Washer — *W5270024*
7. Fastener (M8 x 30 mm) — *W5330289*



**Color matched part — see Trekbikes.com for full product list*

Install order

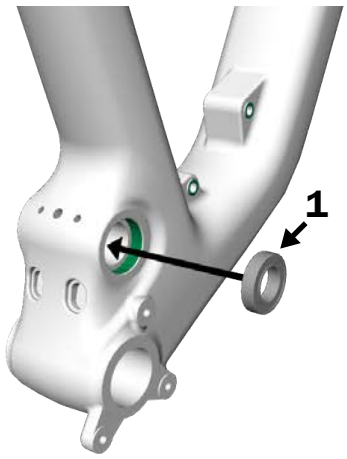

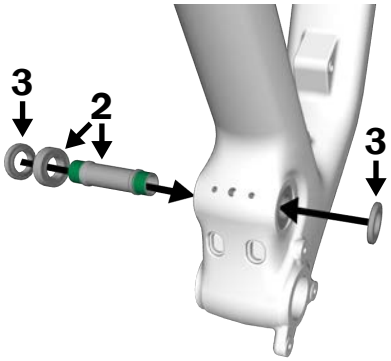

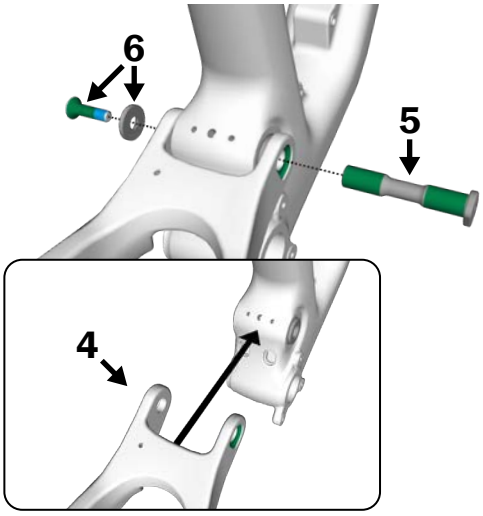

Active Braking Pivot (ABP)

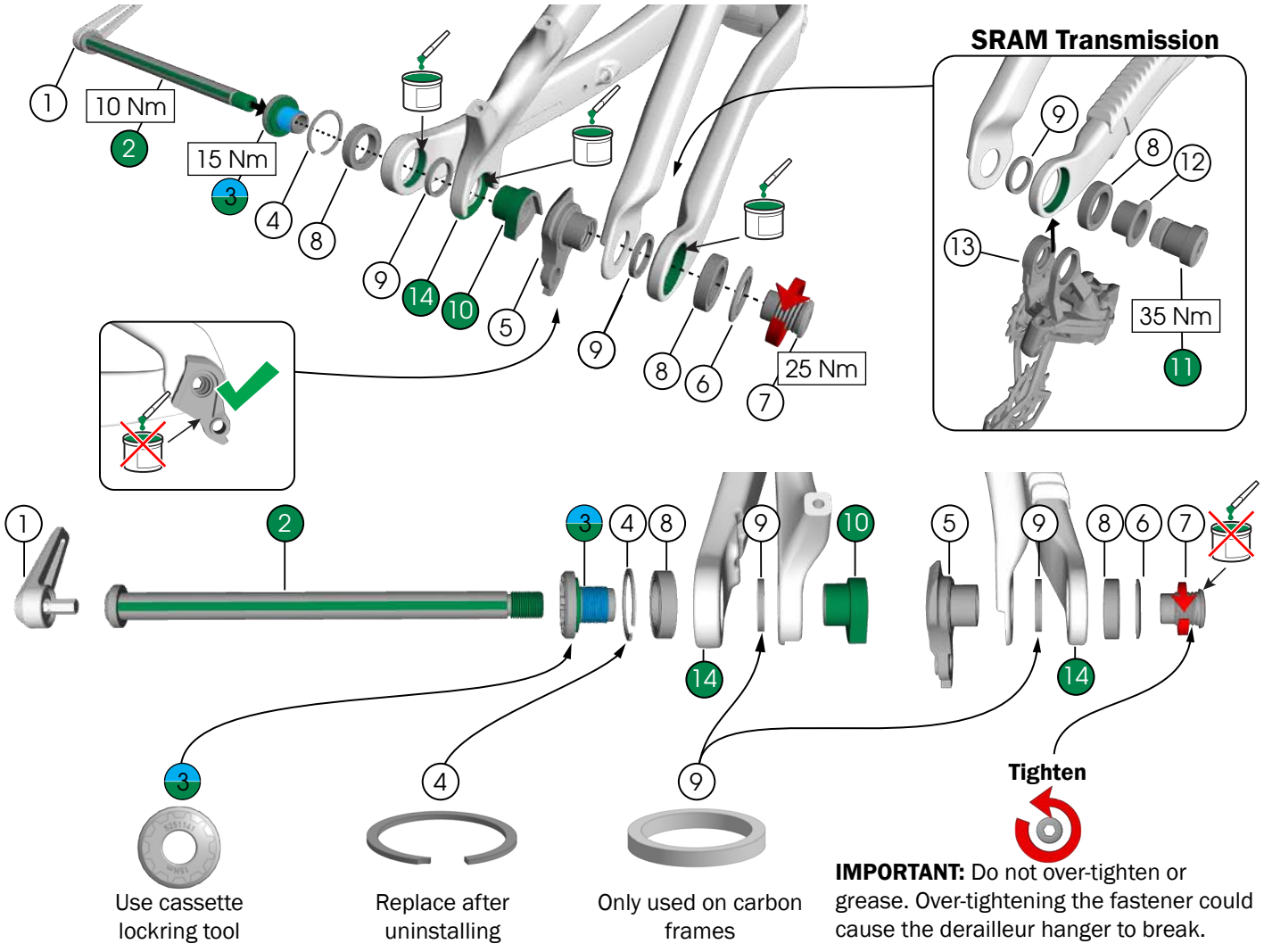

1. Switch lever — *W573860*
2. Axle (M12 x 184.5 mm) — *W583469*
3. Fastener (M16) — *W5251141*
4. Retaining ring — *W5251279*
5. Derailleur hanger
6. Washer (30 mm)
7. Fastener (M12 x 16 mm) (5)

   — *W5271425*
8. Bearings (20 mm x 30 mm x 7 mm) — *W5256340*
9. Spacers (25 mm x 20 mm x 3 mm) — *W583422*
10. Dropout nut — *W5269707*
11. Mounting bolt (5)
12. Bushing
13. Derailleur

    — **GS-90-PA-A1*
14. Seatstays

    — Carbon — ***5342447*

    — Alloy — ***5342450*

**SRAM part number*

***Color matched part — see Trekbikes.com for full product list*

Lower shock mounts

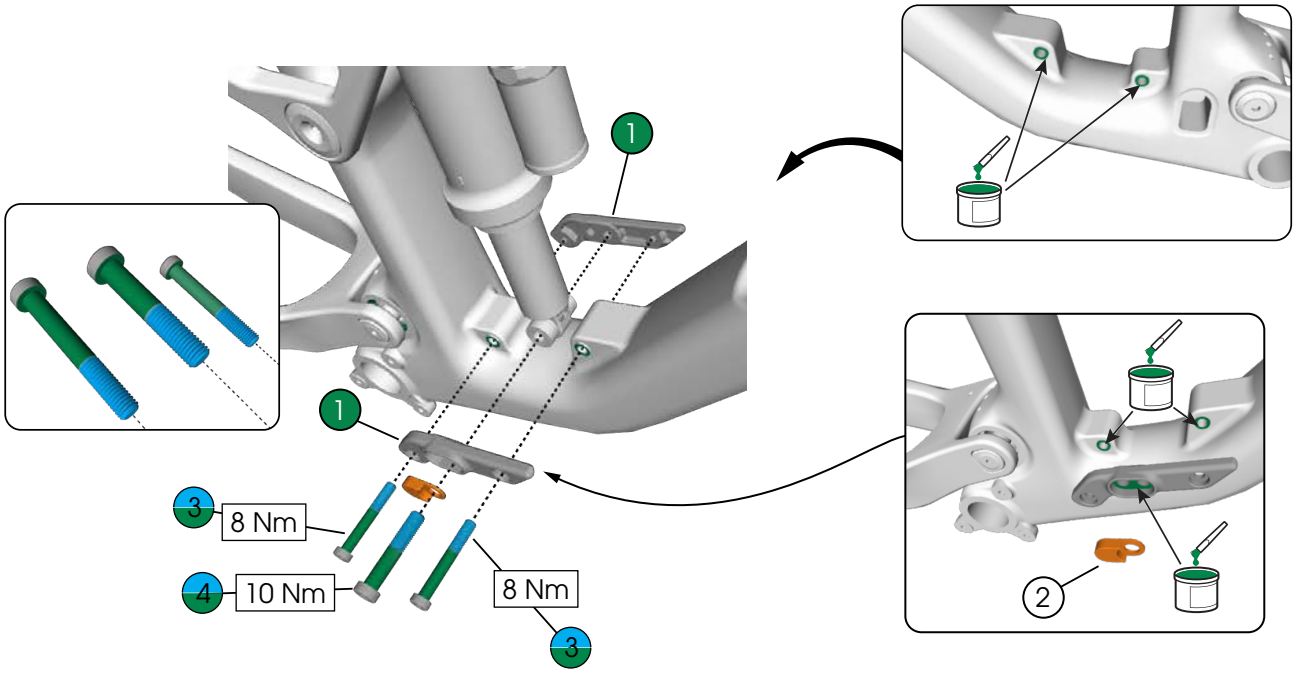

1 Shock mounts
- EX/LX — *5341117*
- MX — *5341118*

2 Progression chip — *5329557*

3 Fasteners (M6 x 45 mm) — *W5329806*

4 Fastener (M8 x 45 mm) — *W5329807*

Adjust progression

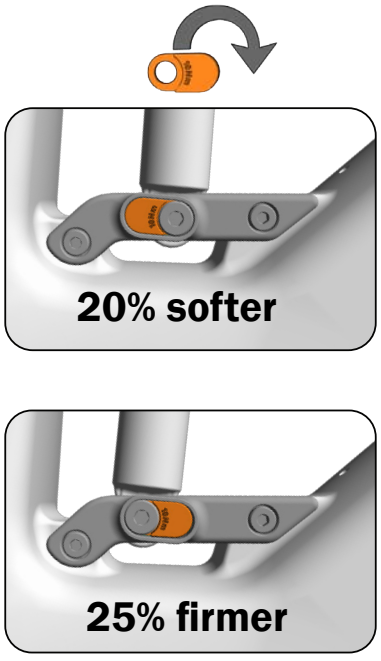

More reactive to repeated mid-size bumps

More bottom-out resistance over big bumps and drops

Shock dimensions

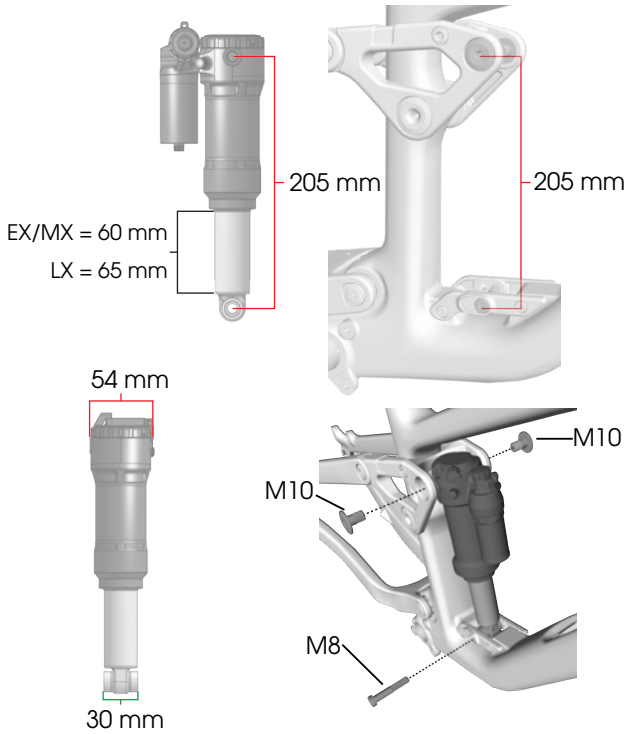

Rocker links

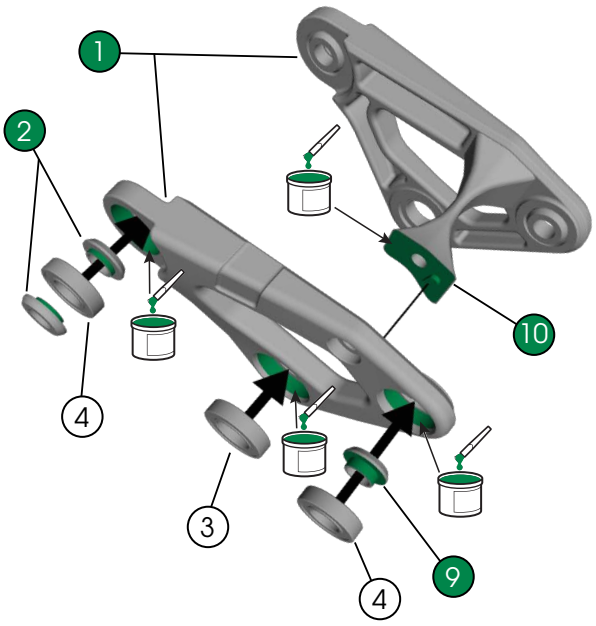

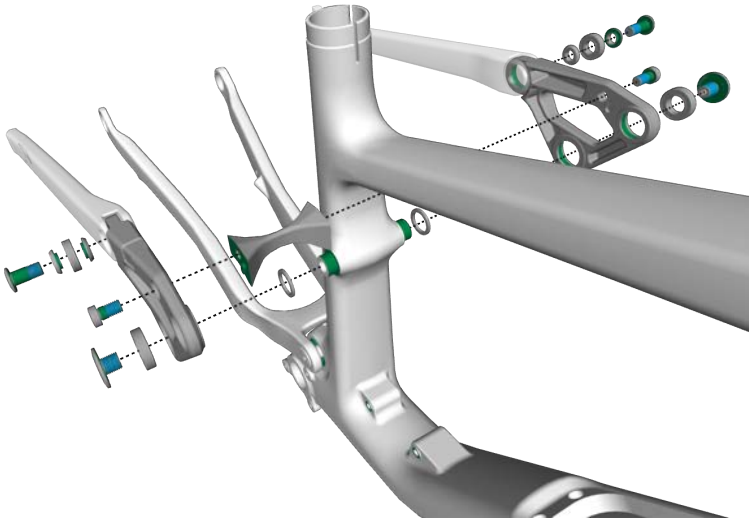

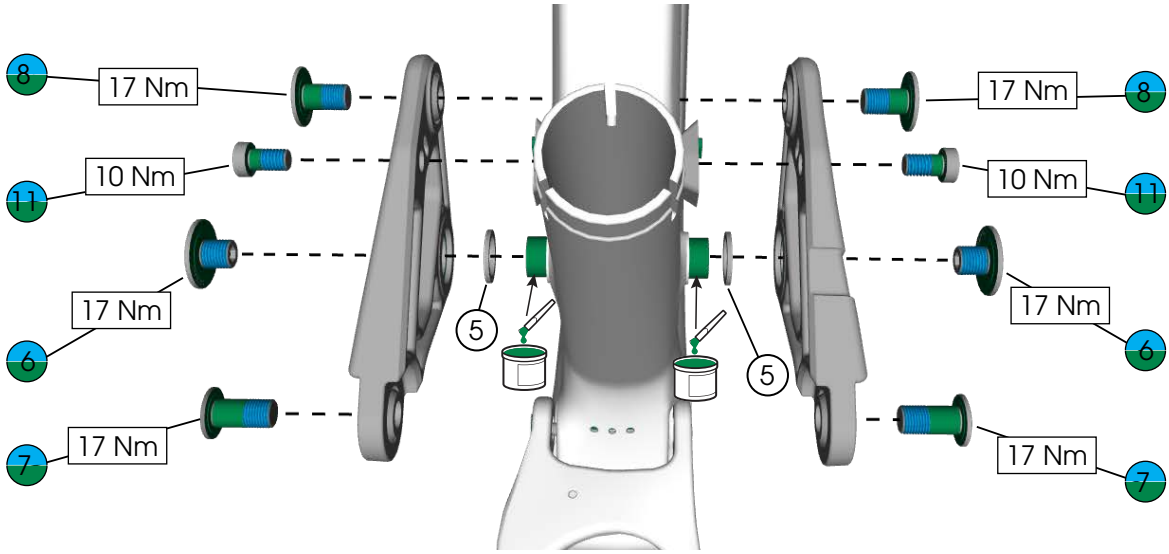

1 Rocker links
- EX — *5341114*
- MX — *5341115*
- LX — *5341116*

2 Spacers — *W5257190*

3 Bearings (17 x 30 x 7 mm) — *5290435*

4 Bearings (12 mm x 24 mm x 6 mm) — *5290440*

5 Spacers (2 mm width) — *W5330934*

6 Fasteners (M12 x 12 mm) — *W5325465* (6)

7 Fasteners (M10 x 21 mm) — *W600629* (5)

8 Fasteners (M10 x 17 mm) — *W5325464* (5)

9 Spacers — *W5257189*

10 Rocker bridge

11 Fasteners (M8 x 14 mm) (5)

5341426

Suspension hardware tightening order

NOTE: Follow the steps below when installing suspension hardware or performing maintenance. This procedure starts with all hardware removed or loosened.

1. With the bike in the repair stand, install and loosely tighten all hardware.

   IMPORTANT: Do not tighten any hardware more than hand tight. Overtightening the hardware can cause misalignment of the suspension system which can lead to creaking or binding.

2. Install the wheels, remove the bike from the repair stand, and set it on the ground.



3. Tighten all hardware in the order shown below.

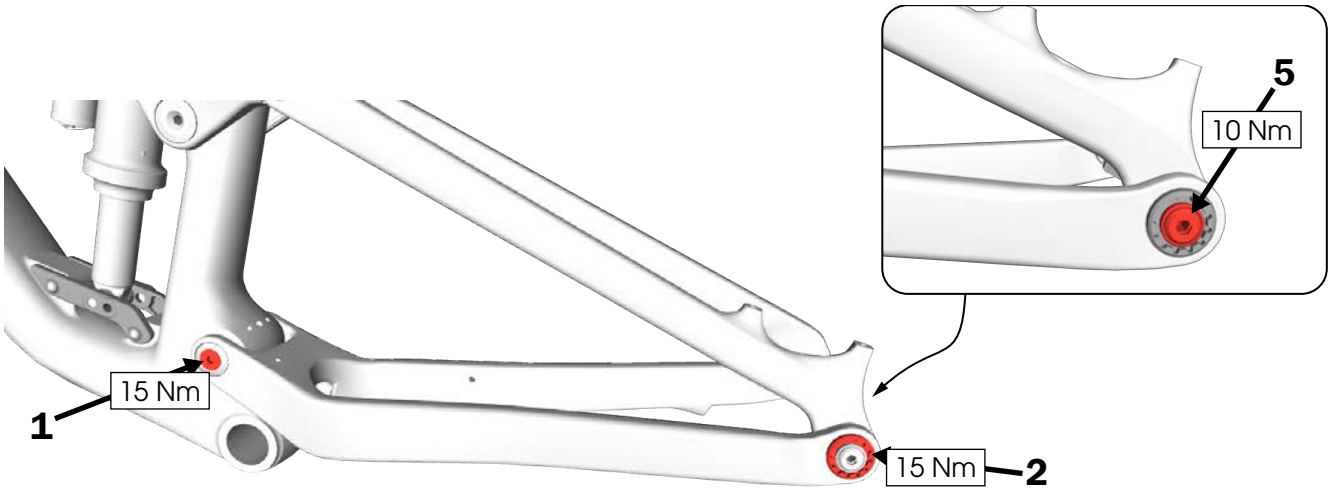

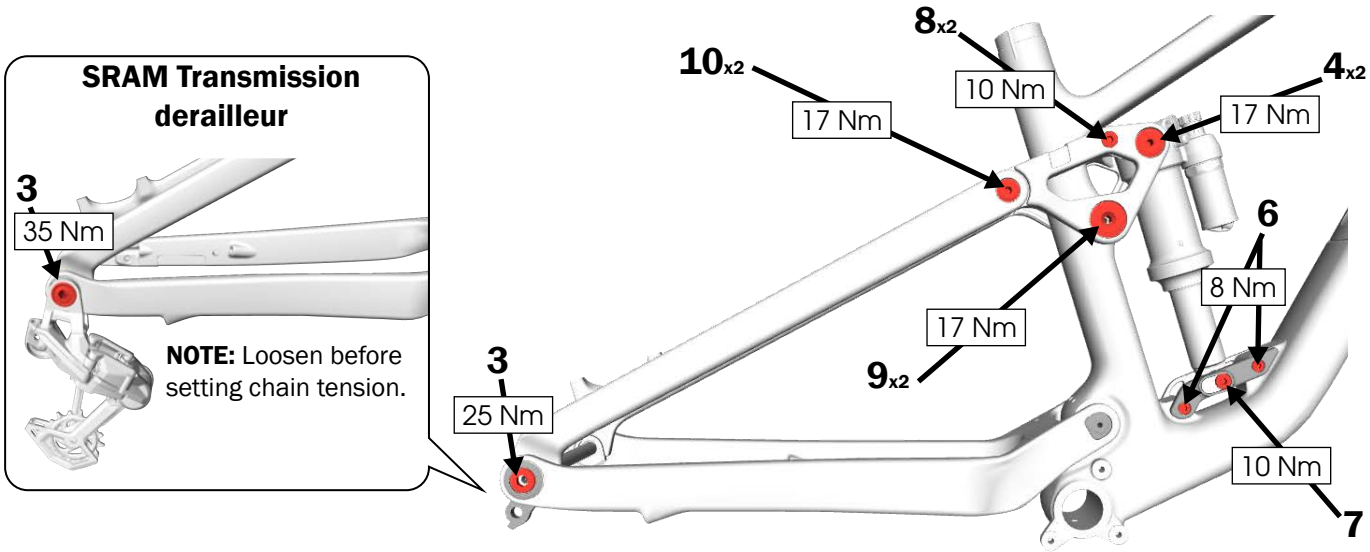

Change rocker links

You can change out the rocker links to adjust the ride feel and geometry.

	Rocker links	Wheel size		Shock stroke	Recommended fork travel	Rear wheel travel	Lower shock mounts
		Front	Rear				
EX	*5341114* 	29"	29"	60 mm	150 mm	145 mm	*5341117* 
LX	*5341116* 	29"	29"	65 mm	170 mm	160 mm	
MX	*5341115* 	29"	27.5"	60 mm	160 mm	150 mm	*5341118* 

Fork travel

Before changing rocker links, verify the fork is compatible with the rear wheel travel listed above (you may need to change forks).

NOTE: For EX to MX conversions, most stock forks can be upgraded to 160 mm travel with a new air spring.

Shock stroke

Before changing rocker links, verify the shock is compatible with the shock stroke listed above.

EX to LX requirements

- RockShock — new shock with longer stroke
- Fox — increase travel limiting clip

Change rocker links — remove rocker links

1. Remove the rear wheel.
2. If replacing, remove the fork.
3. Add padding between the seat tube/rocker bridge, seat stays/chainstay, and around the down tube (where the shock would hit it).

   NOTICE: Add padding in the locations shown below to avoid falling parts damaging the frame as you disassemble.

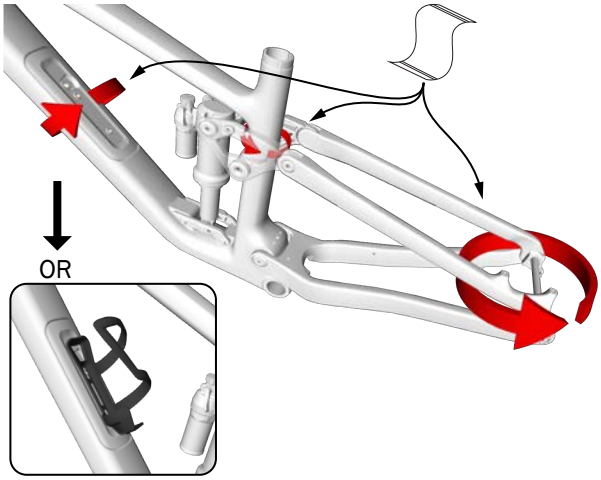

4. Loosen all rocker link fasteners and lower shock mount bolts.

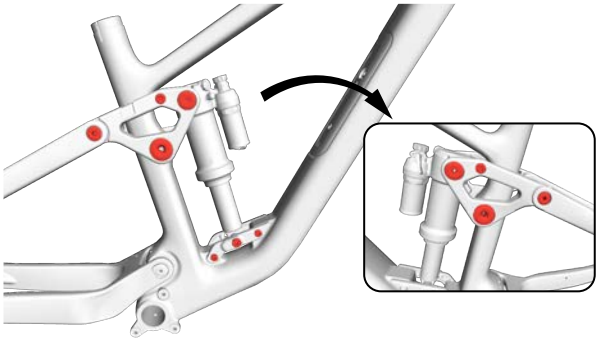

5. Remove the upper shock fasteners and spacers. Carefully lay the shock forward.

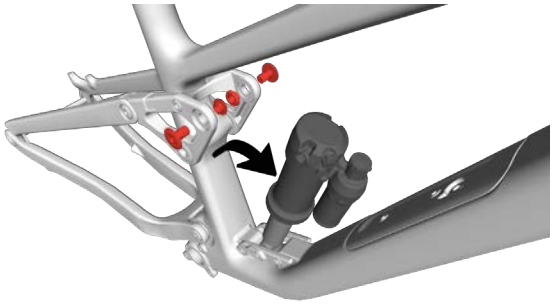

6. Remove the lower shock mount fastener, shock, and progression chip.

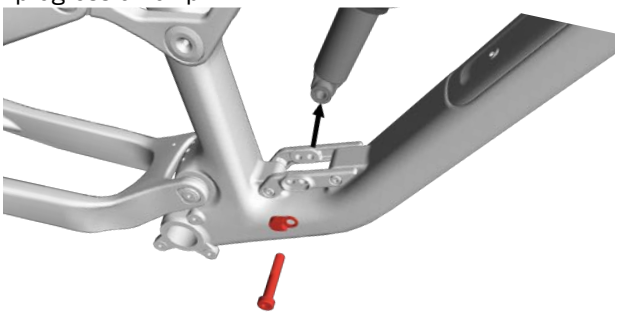

7. If you are replacing the lower shock mounts, remove them.

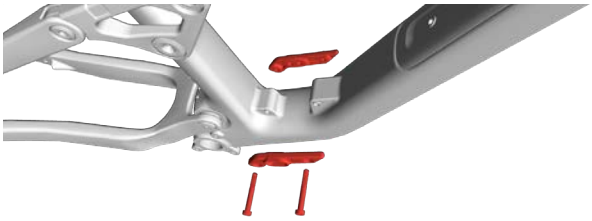

8. Remove the rocker hardware from the seatstays.

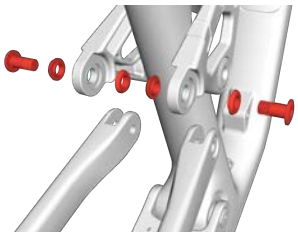

9. Remove the drive side rocker. Repeat for other side.

   NOTE: You will use the same rocker bridge for another set of rocker links.

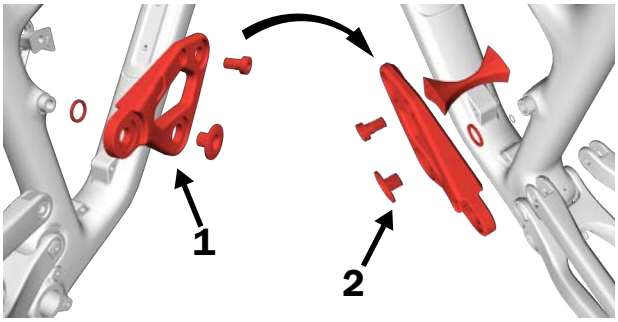

Change rocker links — install rocker links

BEFORE YOU BEGIN: Inspect all parts for damage and replace if necessary. Clean all greased parts/surfaces.

IMPORTANT: Do not tighten any hardware more than hand tight. Overtightening the hardware can cause misalignment of the suspension system which can lead to creaking or binding.

1. Grease the frame and loosely install the drive side rocker link.

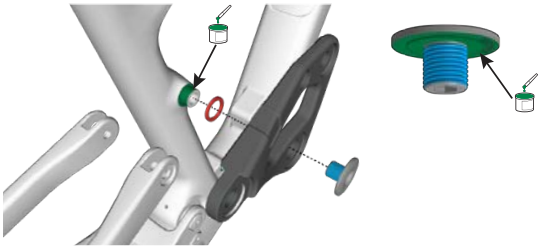

2. Grease the rocker bridge and insert it into the non-drive side rocker link. Then grease the frame and loosely install the non-drive side rocker link assembly.

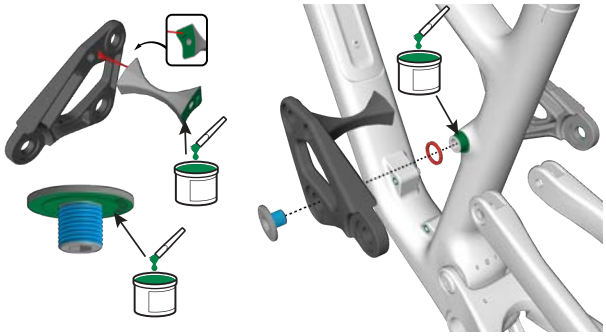

3. Loosely install the bridge bolts.

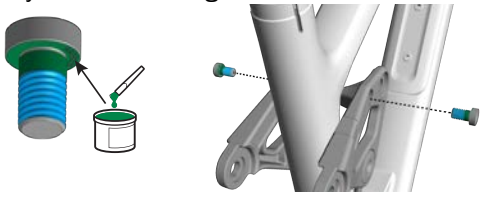

4. Insert the seatstay spacers and loosely install the seatstay bolts.

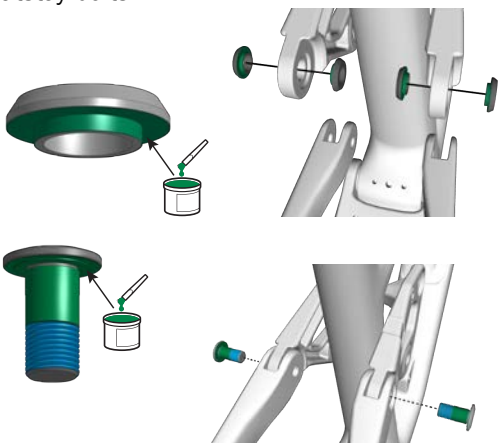

5. Grease the frame and loosely install the lower shock mounts. Then install the shock and progression chip.

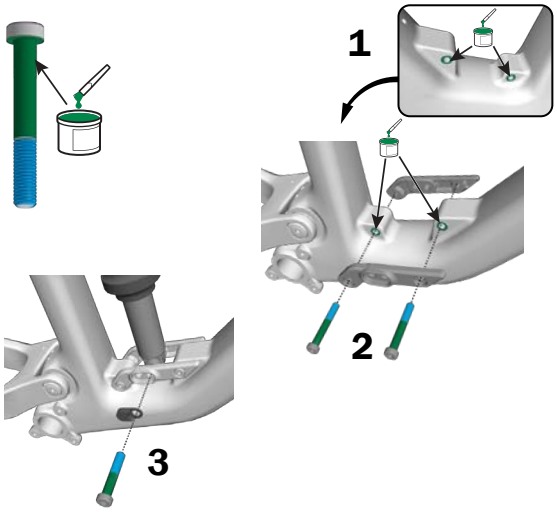

6. Insert the shock spacers and loosely install the shock bolts.

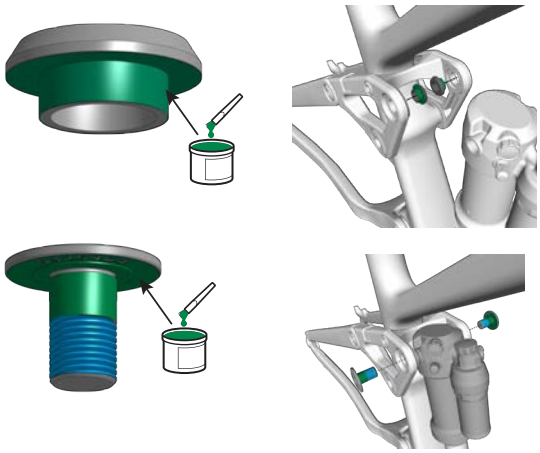

7. Install the fork and rear wheel.

8. Verify chain length. If there is slack in the smallest cog, reduce the chain length by two links (one inner and one outer).

9. Fully tighten all hardware following the procedure on Suspension system tightening on page 7.

Routing — carbon

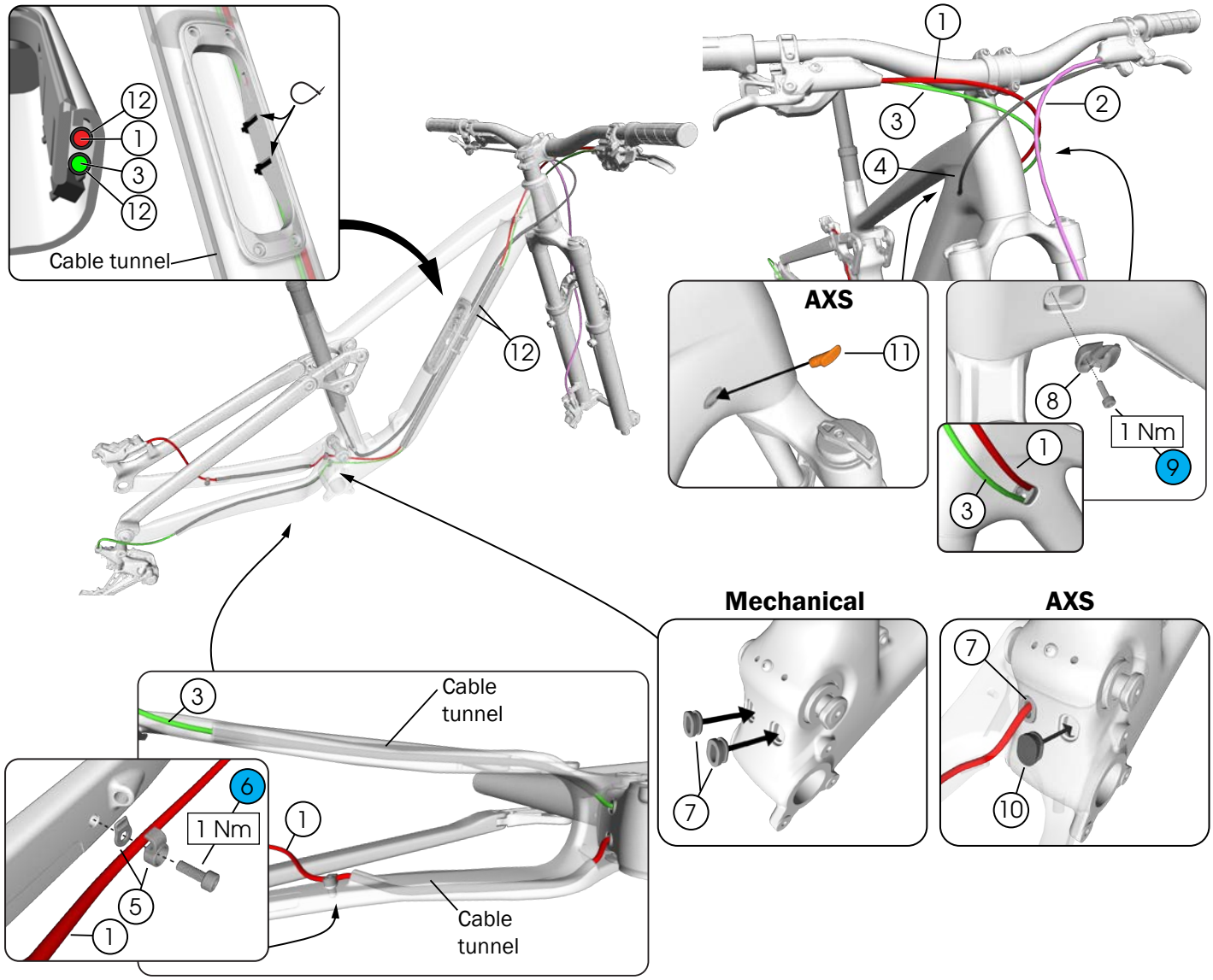

1. Rear brake hose
2. Front brake hose
3. Rear derailleur cable
4. Dropper seatpost cable
5. Cable guide
6. Fastener (M5 x 14 mm) — 4 — *W5329704*
7. Grommets — *W5255861*
8. Control Freak cable guide — *W5317471*
9. Fastener (M3 x 10 mm) — *W545633* — 2.5
10. Plug — *5256254*
11. Plug — *600649*
12. Housing sleeves — *W528082*

Routing — alloy

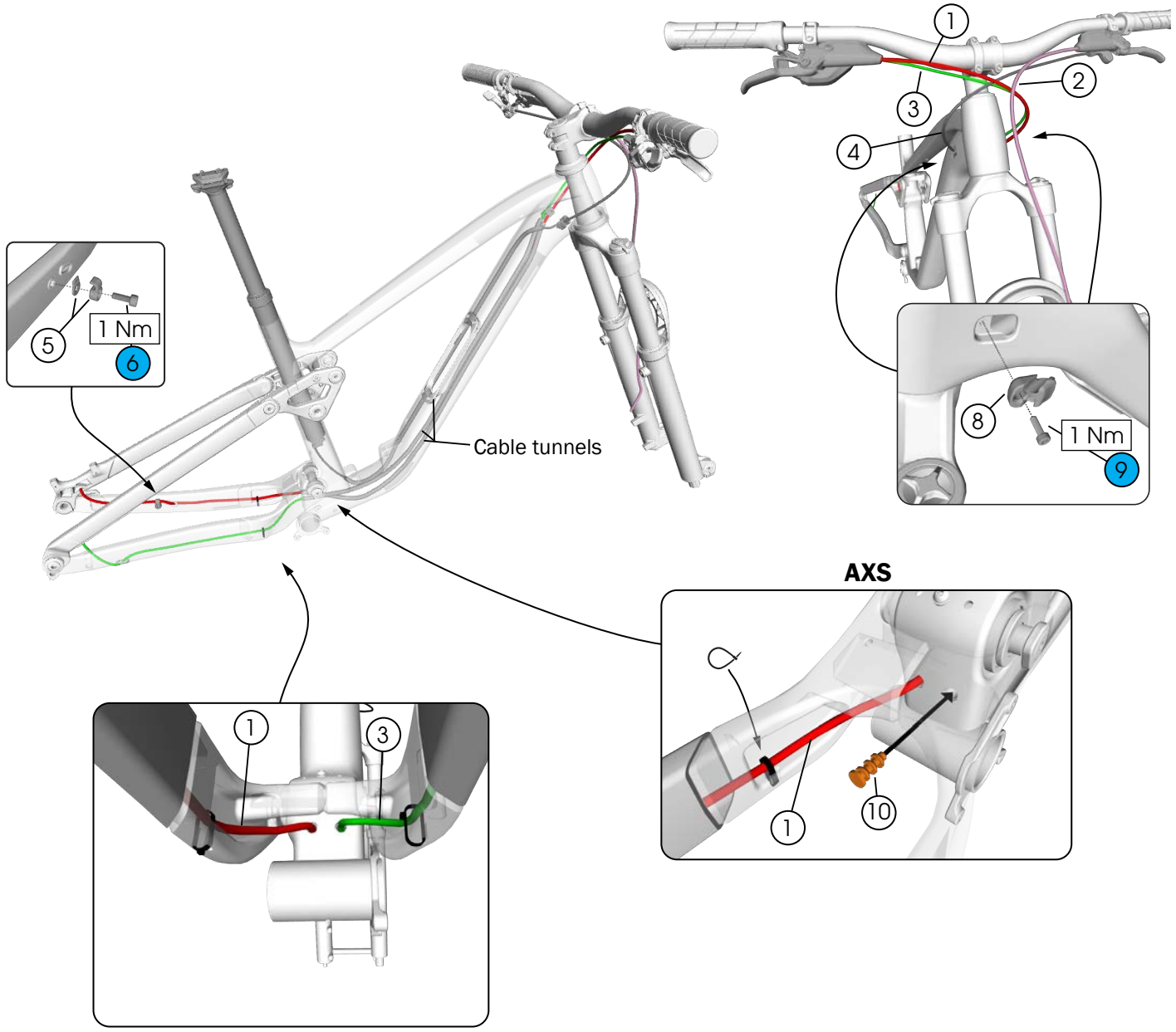

1. Rear brake hose
2. Front brake hose
3. Rear derailleur cable
4. Dropper seatpost cable
5. Cable guide
6. Fastener (M5 x 14 mm) — 4 — *W5329704*
7. Grommets — *W5255861*
8. Control Freak cable guide — *W5317471*
9. Fastener (M3 x 10 mm) — *W545633* — 2.5
10. Plug — *5314924*

Headset

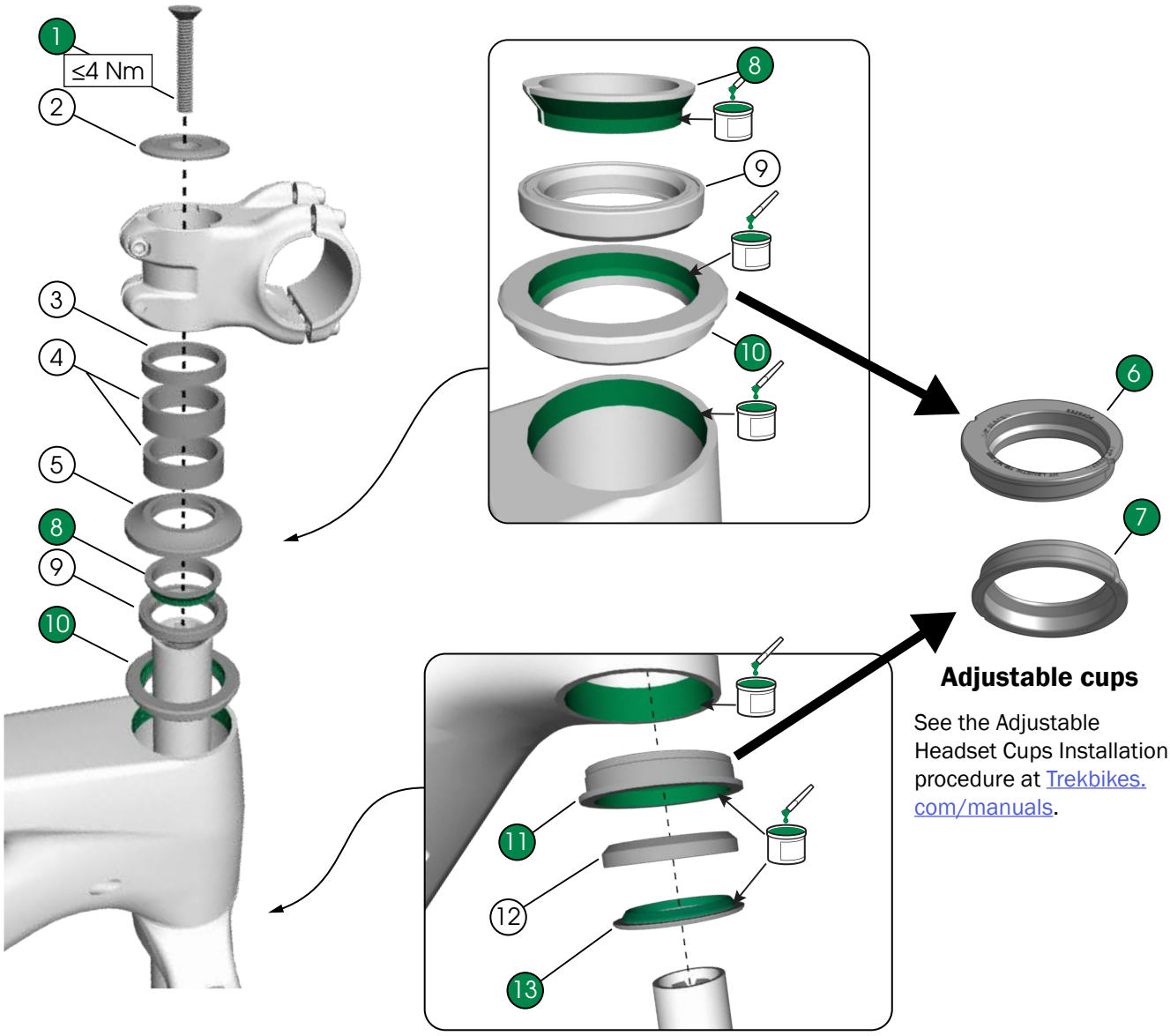

Adjustable cups

See the Adjustable Headset Cups Installation procedure at Trekbikes.com/manuals.

1. Fastener (M6 x 35 mm)
2. Top cap
3. Spacer (5 mm)
4. Spacers (10 mm) — *W547432*
5. Bearing cover, upper — *W5275173*
6. Bearing cup, upper (+/– °1)
   - 90-117 mm — *W5326405*
   - 118-147 mm — *W5326404*
   - 148-175 mm — *W5326406*
7. Bearing cup, lower (+/– °1) — *W5294449*
8. Compression ring — *W532842*
9. Bearing, upper — *W531676*
10. Bearing cup, upper — *W5304949*
11. Bearing cup, lower — *W5304949*
12. Bearing, lower — *W532843*
13. Crown race — *W532844*

W5344366

Guards

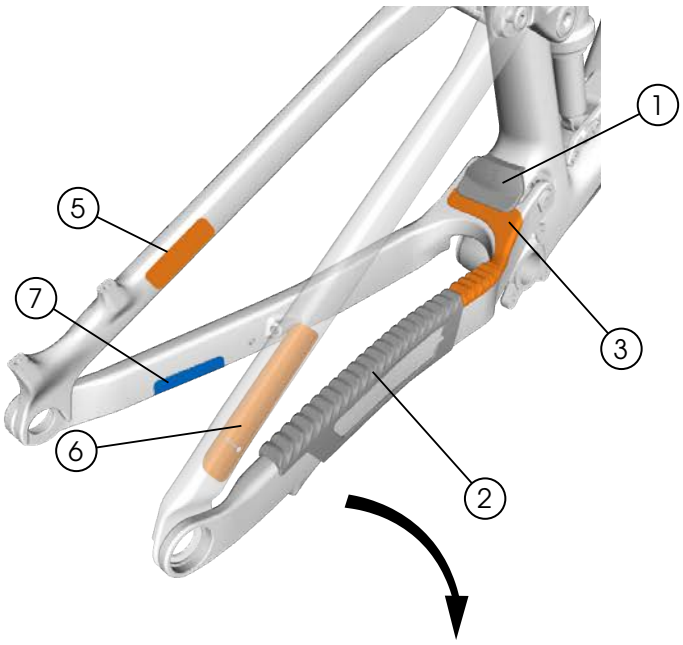

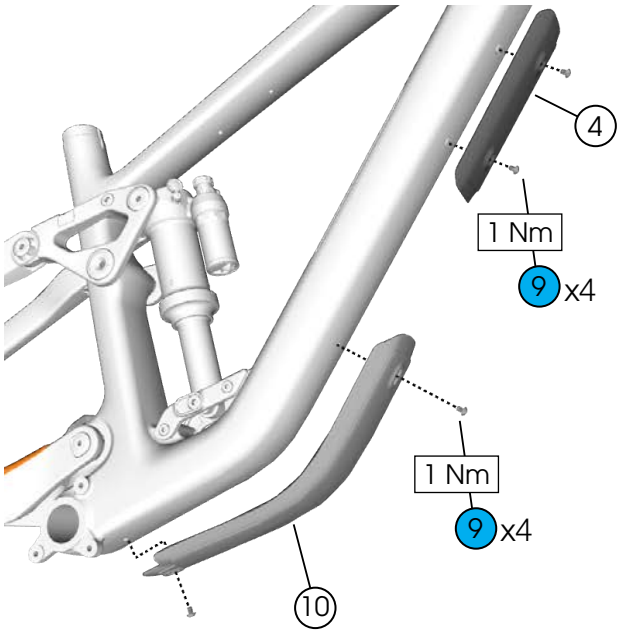

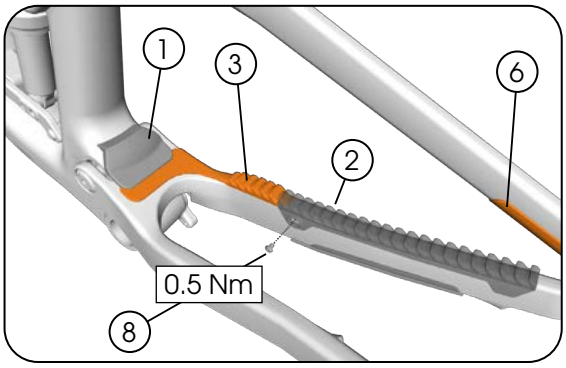

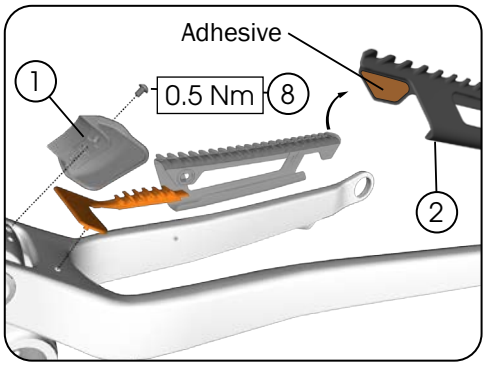

1. Gap guard — *5330875*
2. Chainstay guard — *5332532*
3. Yoke guard — *W5332531*
4. Shuttle guard — *5306877*
5. Rub armor — *W326986*
6. Seatstay armor — *W5255862*
7. Rotor guard — *W580881*
8. Fasteners (M4 x 10 mm) — *W575056* 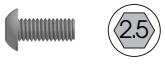

9. Fasteners (M4 x 6 mm) — *W575056* 

10. Down tube guard — *5307891*

Adhesive guard 3 5 6

Use isopropyl alcohol to clean the frame surface where the guard attaches. Wait for the alcohol to dry before applying the guard.

NOTICE: Do not clean the entire frame with isopropyl alcohol. Isopropyl alcohol could damage the paint.

Bonded guard 7

Use sandpaper to roughen the backside of the guard and remove remnants of the old guard from mating surfaces. Then use a two-part epoxy to attach the guards following the manufacturer's instructions.

Storage door

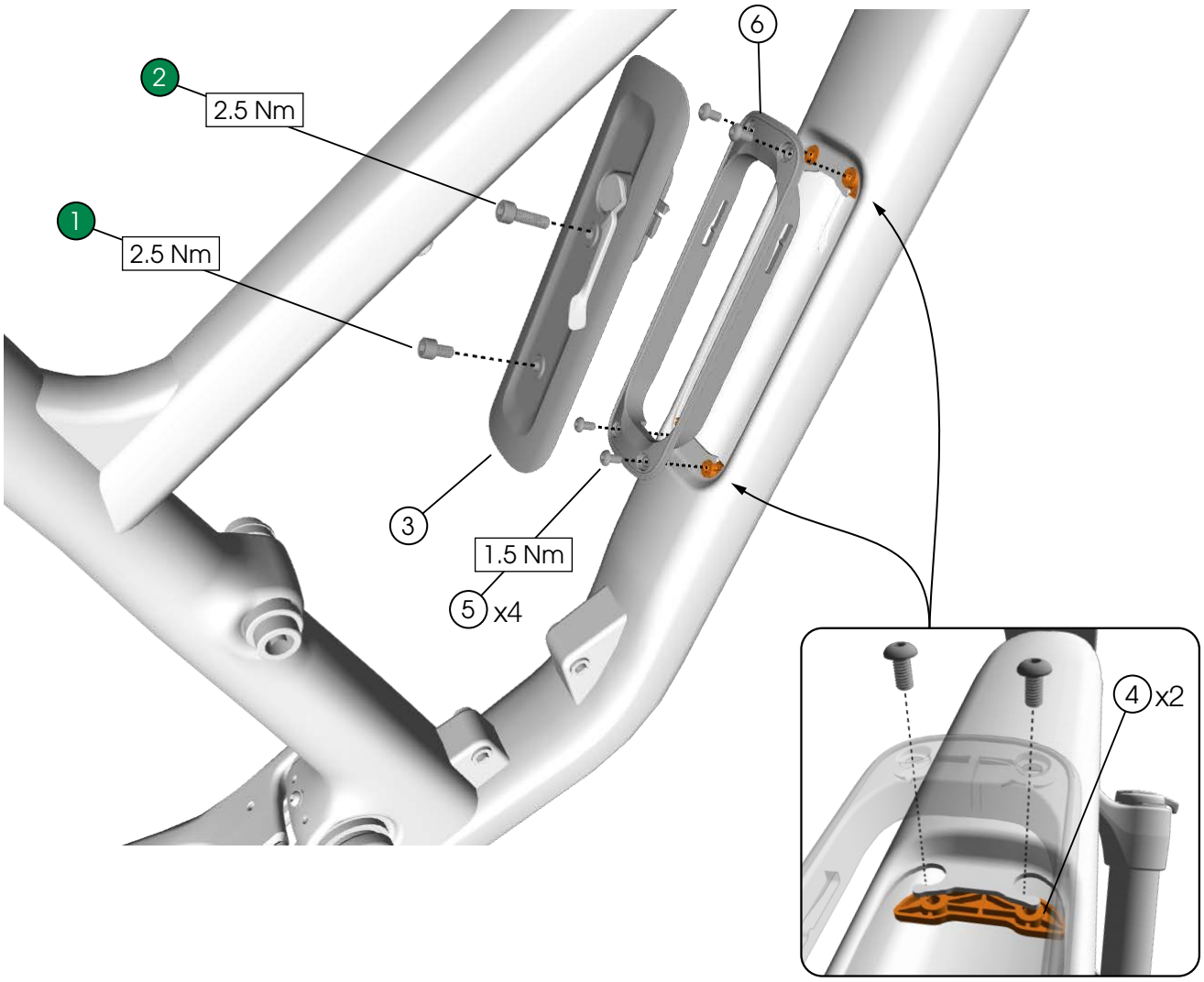

1	Fastener (M5 x 8 mm)		4	*5328604
2	Fastener (M5 x 16 mm)	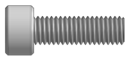	4	
3	Storage door (color)			
4	Nut clamps			
5	Fasteners (M4 x 8 mm)		2.5	Carbon — *W596821*
6	Frame			

Alloy — *W5297657*

**Color matched part — see Trekbikes.com for full product list*

Specifications

Frame

		Fuel
Hub OLD	Front	110 mm
	Rear	148 mm
Fork steerer tube OD	Upper	28.6 mm / 1-1/8"
	Lower	38.1 mm / 1-1/2"
Brake rotor diameter min/ max	Front	Fork-specific
	Rear	180/203 mm (with adapter)
Tire width max 29"		*2.5" / 63.5 mm
Fender compatible	Rear	No
	Front	Fork-dependent
Head tube ID	Upper	49 mm
	Lower	56 mm
Dropper post compatible		Yes

**as measured when the tire is seated on the rim*

Fork

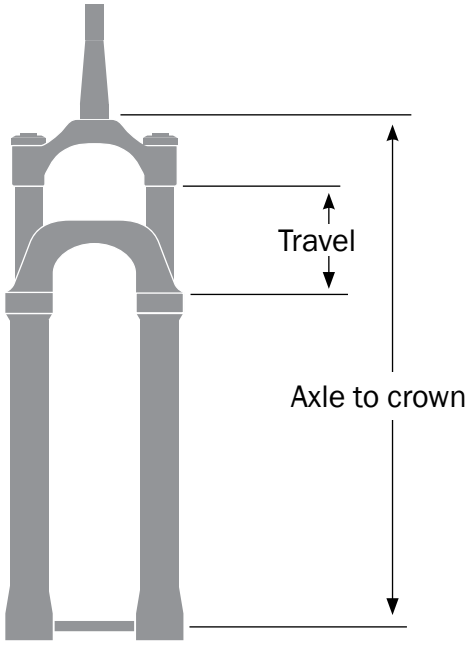

Axle to crown (mm)		Travel max (mm)
Maximum	586	170

Recommended sag: Refer to the suspension calculator at Trekbikes.com/suspension-calculator.

Seatpost

WARNING

Always follow the seatpost manufacturer's minimum insertion recommendation. Failure to follow the recommendation could cause damage to the seatpost and result in injury to the rider.

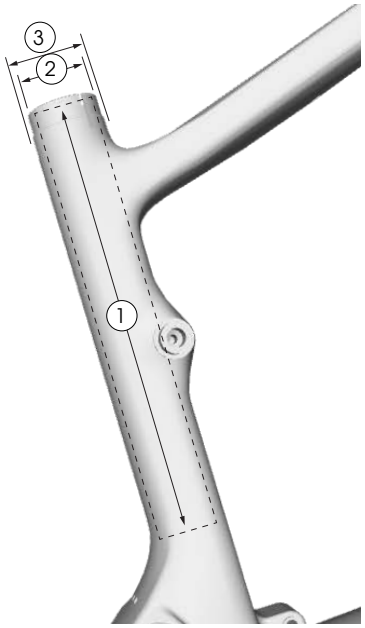

		Carbon	Alloy
① **Maximum insertion**	**S**	300 mm	270 mm
	M	330 mm	300 mm
	L	350 mm	300 mm
	XL	370 mm	300 mm
	XXL	390 mm	—
② **Seatpost OD**	34.9 mm		
③ **Seatpost clamp ID**	39.5 mm		

Chainline/chainring

	Chainline	Max chainring teeth (T)	
		Min	Max
Round	55 mm	28T	34T
Oval	55 mm	30T	32T