


# FUEL+ GEN 2

## SERVICE MANUAL

# Contents


## Suspension

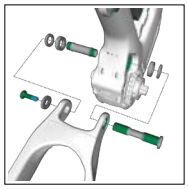
Main pivot

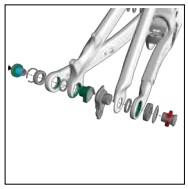
Active Braking Pivot (ABP)

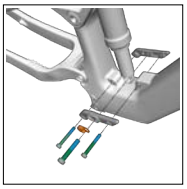
Lower shock mounts

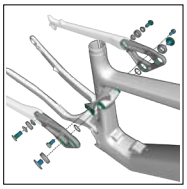
Rocker links

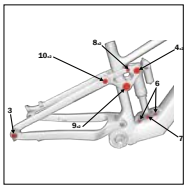
Suspension hardware tightening order

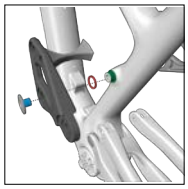
Change rocker links

## Routing

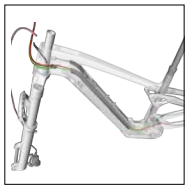
Routing — carbon


Routing — alloy


Routing — e-system


Routing — wired AXS

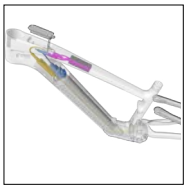
Routing — Di2

## E-system

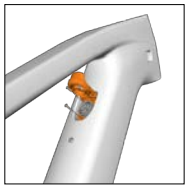
Charge port cover


Cable tray and motor covers

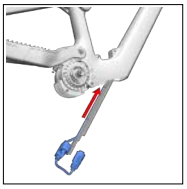
Install the cable tray

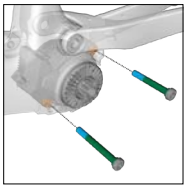
Drive unit

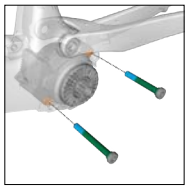
Install the drive unit

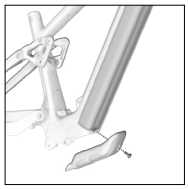
Battery

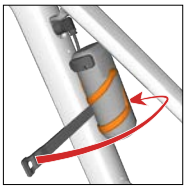
Range extender

## Frame

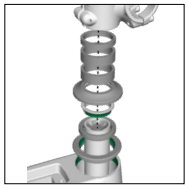
Headset


Guards

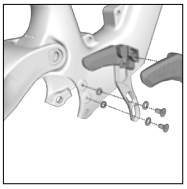
Chainguide

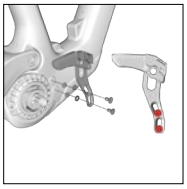
Install the chainguide


Specifications


Copyright 2025 Trek Bicycle Corporation All Rights Reserved

# About this manual

## Scope

This manual contains parts diagrams, specifications (such as grease and torque values), instructions, part numbers, and helpful tips. It does not contain instructions for all components (such as brake calipers). Refer to the original manufacturer for more information.

## Replacement parts

Trek recommends using only Trek OEM (original manufacturer) replacement parts.

## Additional info

Additional manuals are available at Trekbikes.com/manuals.

- Owner's Manual — comprehensive instructions that come with your bicycle
- HPR60 Owner's Manual — detailed instructions on the e-system

Further e-system information is also available at TQ-ebike.com.

## Inspect the bike

Please inspect the bicycle carefully after removal from the box and all packaging:

- Inspect all surfaces of the bicycle for damage, pay special attention to the fork legs and the seat stays (both inside and outside surfaces).
- If packaging damage is located near the front of the bicycle, remove the fork from the frame and inspect the steerer tube for damage.

## Legend


Cable (zip) tie



Torque value

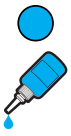
Apply appropriate threadlocker


Apply Bontrager grease

## Safety

**WARNING**

**Before performing any work on an e-bike, completely power off the e-system.**

An active e-system may start unexpectedly and cause injury.

**WARNING**

**Properly tighten hardware**

Always tighten hardware to the specified torque. Over-tightening hardware could deform or break the hardware or components. Under-tightening or over-tightening hardware could cause hardware or components to become loose. Either situation could damage the bicycle and result in injury to the rider.

**WARNING**

**Reapply threadlocker**

All reused-fasteners with pre-applied threadlocker must be cleaned with isopropyl alcohol and have new threadlocker applied before re-assembly. If threadlocker is not applied, the fasteners may loosen which could damage the bicycle and result in injury to the rider.

**IMPORTANT:** All repairs, assembly, servicing and maintenance must be performed only by TQ-authorized bicycle dealers.

## 3D interactive graphics

Click the icon in this manual to view interactive models.

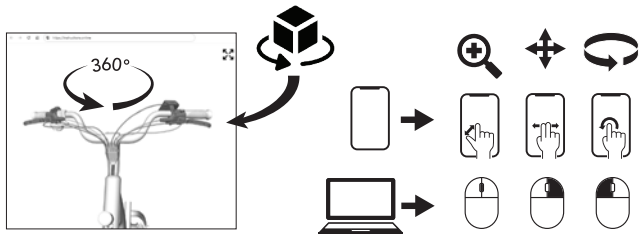


## We value your feedback

We hope you find our service manual useful. To help us improve, please take a brief survey about your experience. We periodically update our manuals and your input ensures we provide the highest quality user experience.



## For product help or inquiries:

Please visit trekbikes.com/contactus or call Customer Care.

# Main pivot

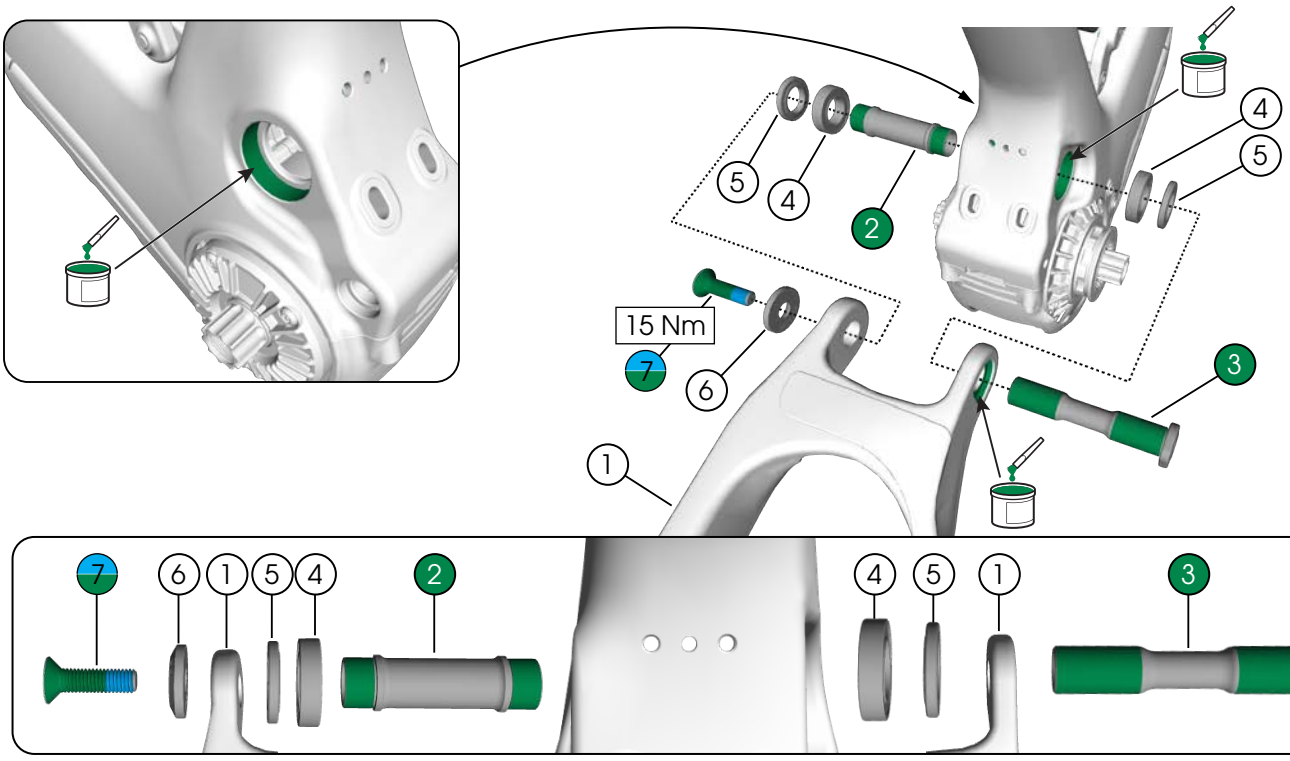


1. Chainstay
   - Carbon (black) — **5342433*
   - Alloy (gray) — **5342437*
2. Bearing spacer — *W5330255*
3. Axle — *W5330256*
4. Bearings (17 mm x 30 mm x 7 mm) — *5290435*
5. Spacers (4 mm width) — *W5305806*
6. Washer — *W5270024*
7. Fastener (M8 x 30 mm) — *W5330289*



**Color matched part — see Trekbikes.com for full product list*

## Install order

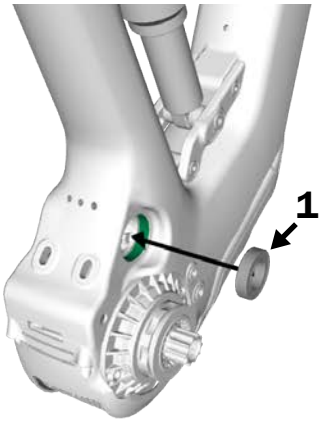


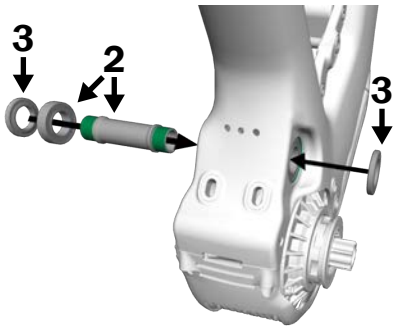


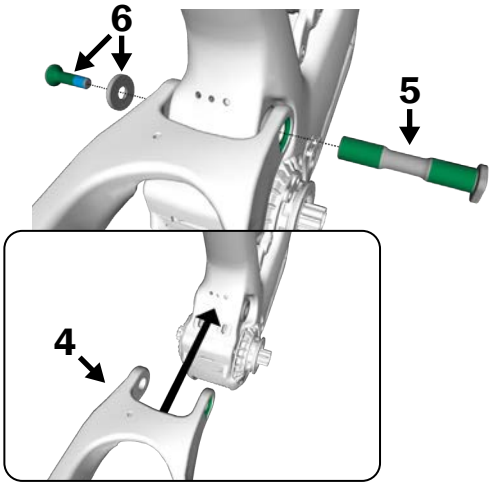

# Active Braking Pivot (ABP)

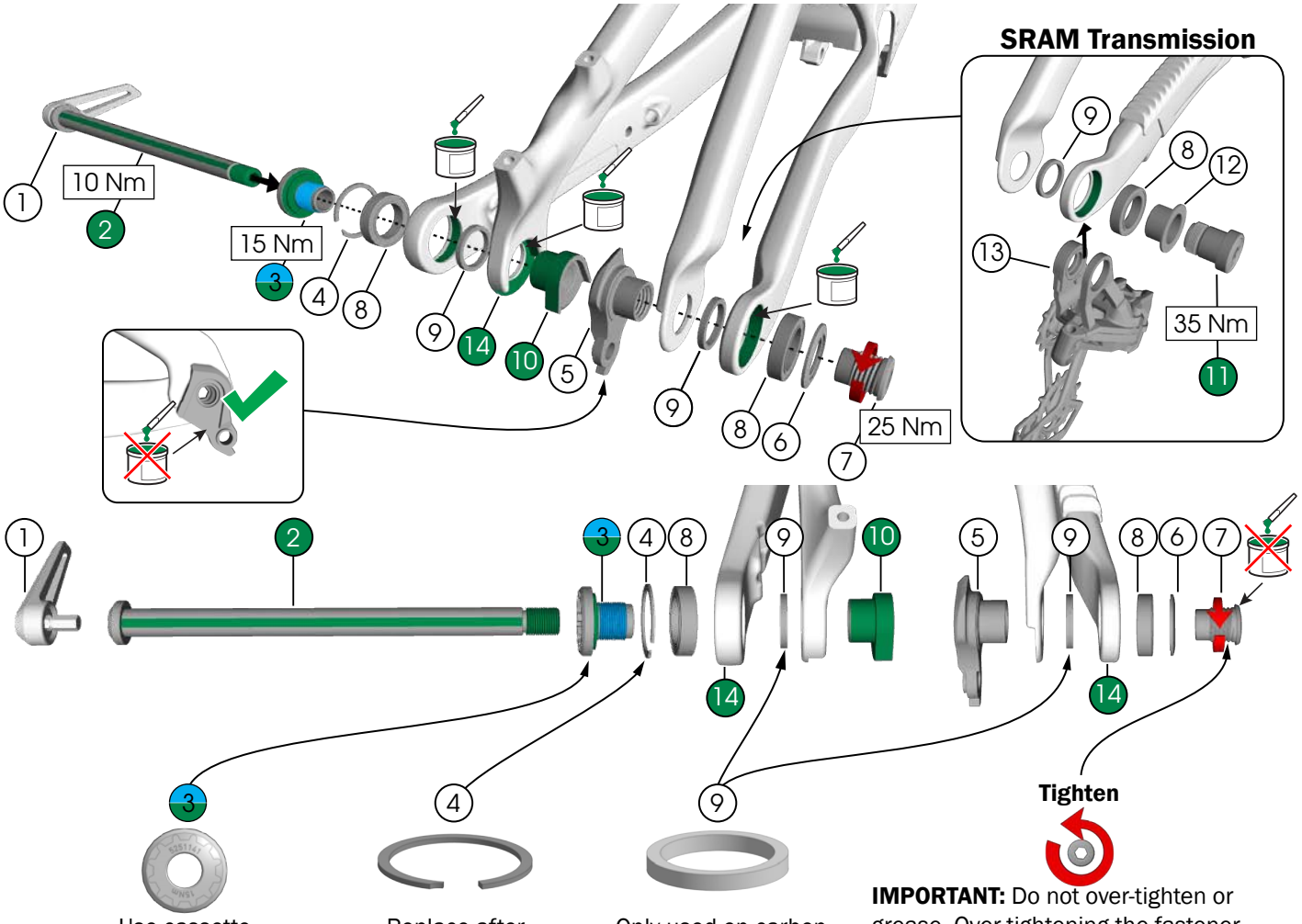


1. Switch lever — *W573860*
2. Axle (M12 x 184.5 mm) — *W583469*
3. Fastener (M16) — *W5251141*
4. Retaining ring — *W5251279*
5. Derailleur hanger
6. Washer (30 mm)
7. Fastener (M12 x 16 mm) (5)

   — *W5271425*
8. Bearings (20 mm x 30 mm x 7 mm) — *W5256340*
9. Spacers (25 mm x 20 mm x 3 mm) — *W583422*
10. Dropout nut — *W5269707*
11. Mounting bolt (5)
12. Bushing
13. Derailleur

    — **GS-90-PA-A1*
14. Seatstays

    — Carbon — ***5342447*

    — Alloy — ***5342450*

**SRAM part number*

***Color matched part — see Trekbikes.com for full product list*

# Lower shock mounts

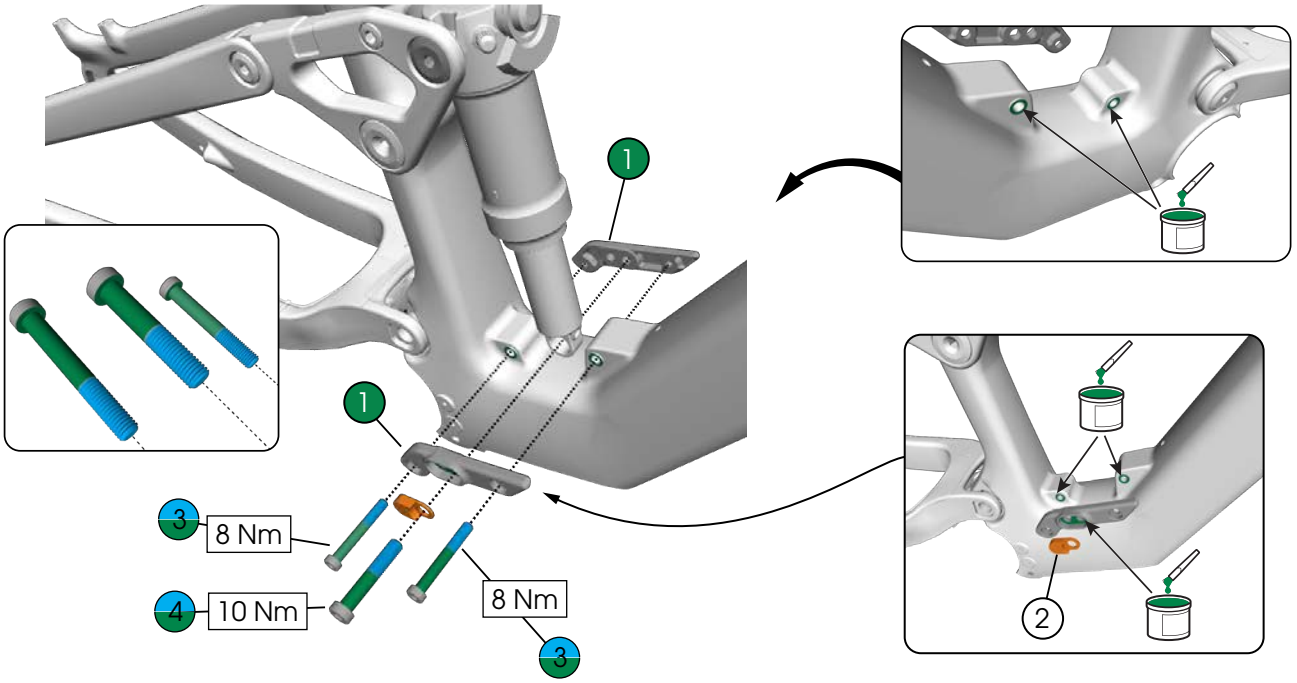


1 Shock mounts
- EX/LX — *5341117*
- MX — *5341118*

2 Progression chip — *5329557*

3 Fasteners (M6 x 45 mm) — *W5329806*

4 Fastener (M8 x 45 mm) — *W5329807*

## Adjust progression

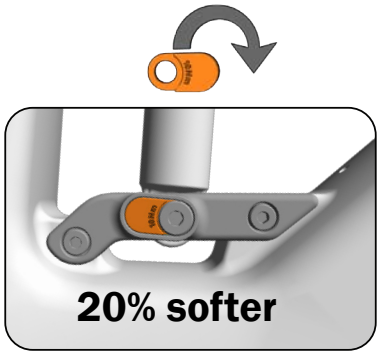


More reactive to repeated mid-size bumps

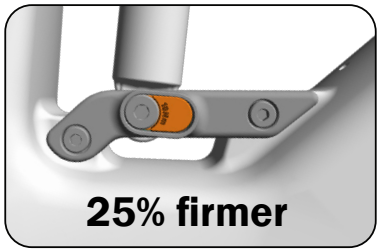


More bottom-out resistance over big bumps and drops

## Shock dimensions

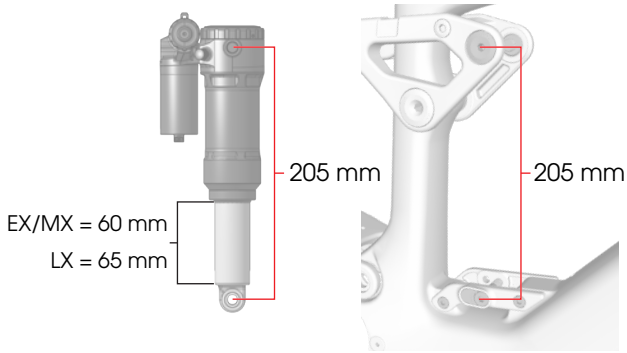


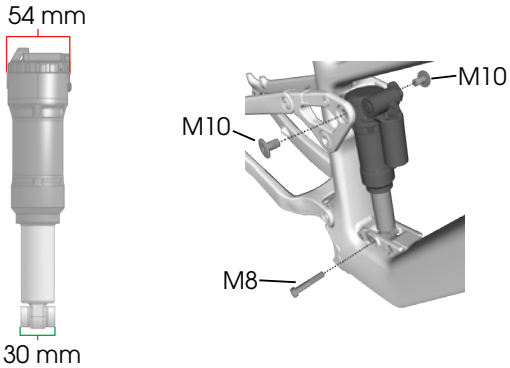

# Rocker links

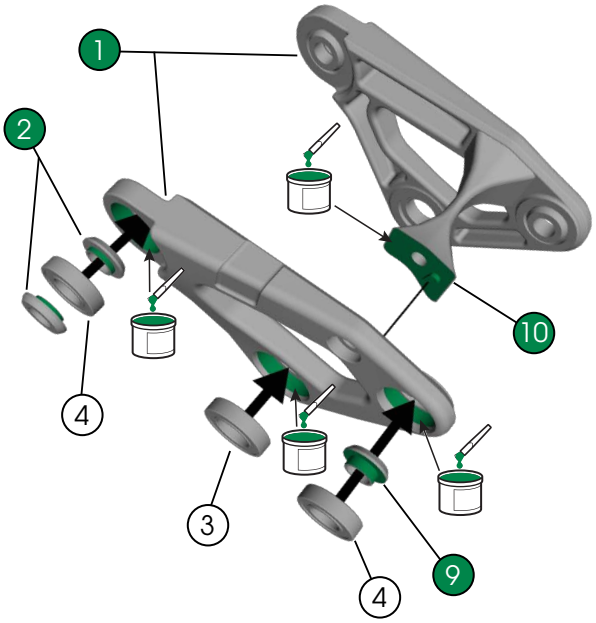


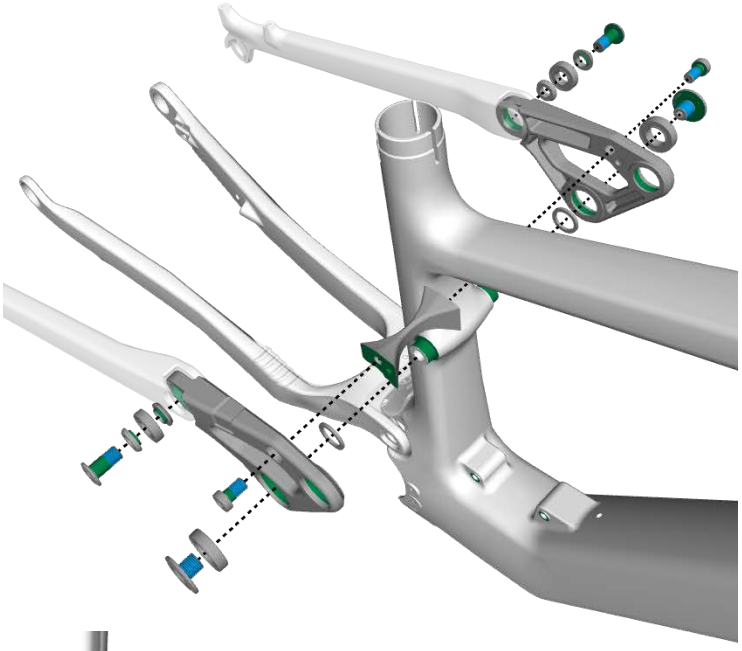

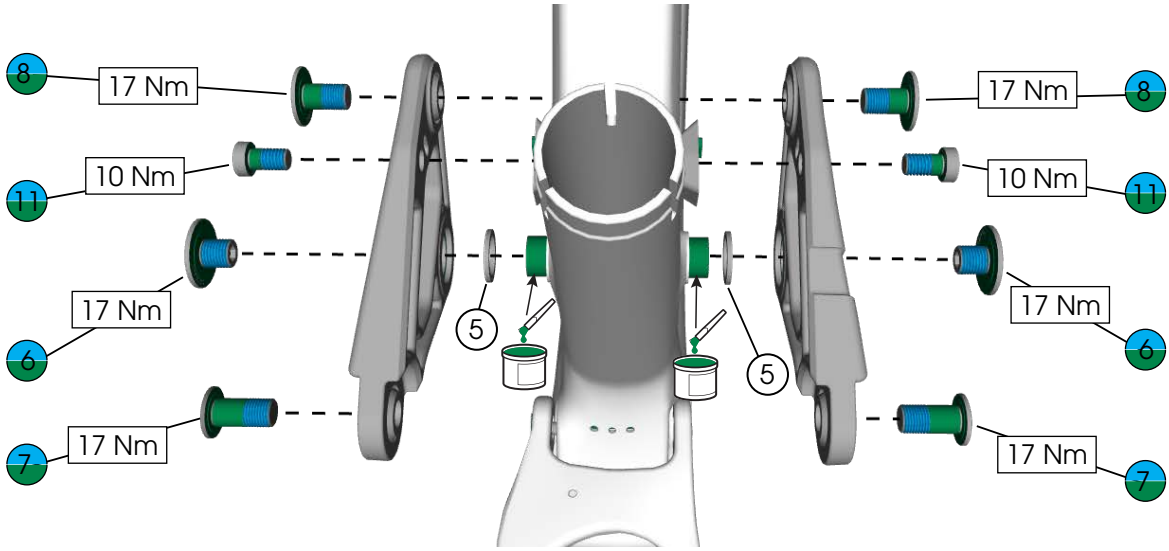


1 Rocker links
- EX — *5341114*
- MX — *5341115*
- LX — *5341116*

2 Spacers — *W5257190*

3 Bearings (17 x 30 x 7 mm) — *5290435*

4 Bearings (12 mm x 24 mm x 6 mm) — *5290440*

5 Spacers (2 mm width) — *W5330934*

6 Fasteners (M12 x 12 mm) — *W5325465* (6)

7 Fasteners (M10 x 21 mm) — *W600629* (5)

8 Fasteners (M10 x 17 mm) — *W5325464* (5)

9 Spacers — *W5257189*

10 Rocker bridge

11 Fasteners (M8 x 14 mm) (5)

*5341426*

# Suspension hardware tightening order

**NOTE:** Follow the steps below when installing suspension hardware or performing maintenance. This procedure starts with all hardware removed or loosened.

1. With the bike in the repair stand, install and loosely tighten all hardware.

   **IMPORTANT:** Do not tighten any hardware more than hand tight. Overtightening the hardware can cause misalignment of the suspension system which can lead to creaking or binding.

2. Install the wheels, remove the bike from the repair stand, and set it on the ground.



3. Tighten all hardware in the order shown below.

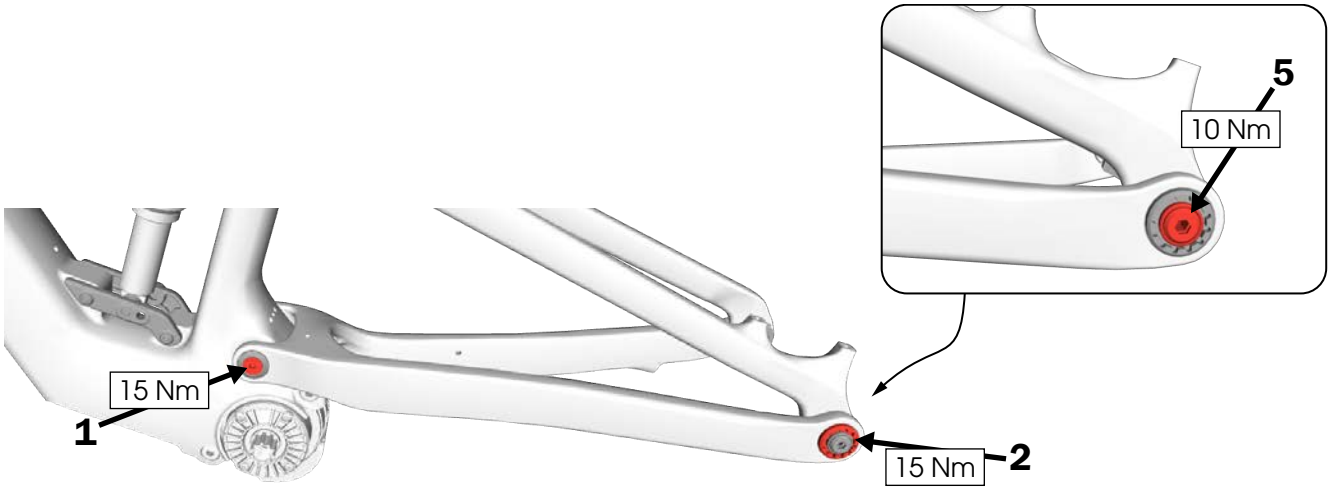


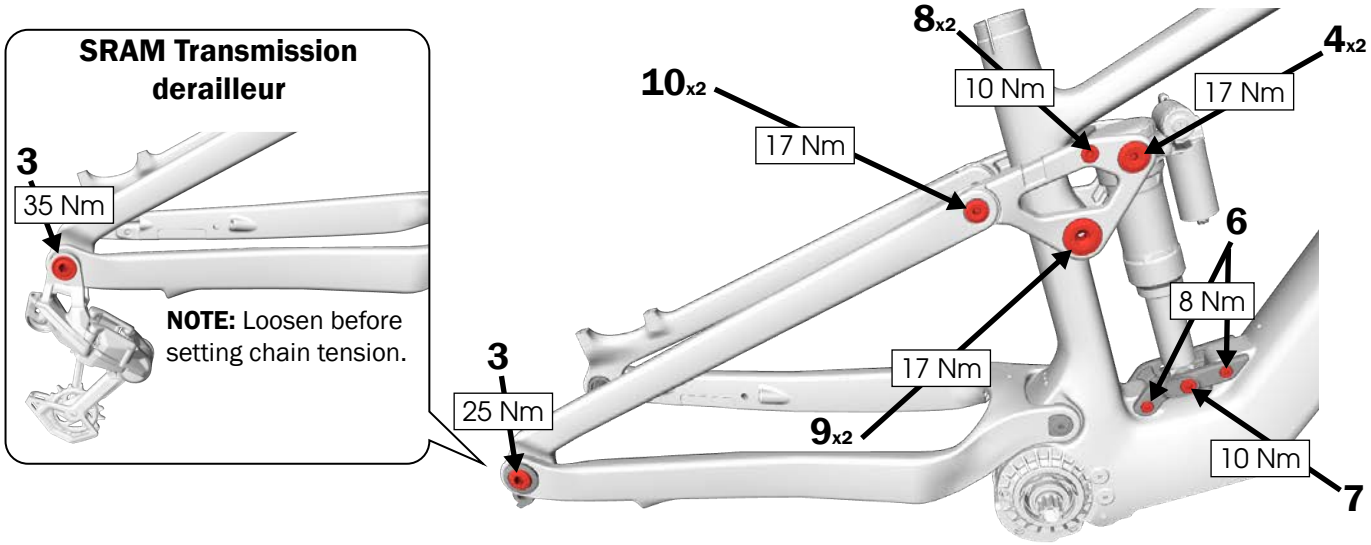

# Change rocker links

You can change out the rocker links to adjust the ride feel and geometry.

| | Rocker links | Wheel size | | Shock stroke | Recommended fork travel | Rear wheel travel | Lower shock mounts |
|---|---|---|---|---|---|---|---|
| | | Front | Rear | | | | |
| **EX** | *5341114*  | 29" | 29" | 60 mm | 150 mm | 145 mm | *5341117*  |
| **LX** | *5341116*  | 29" | 29" | 65 mm | 170 mm | 160 mm | |
| **MX** | *5341115*  | 29" | 27.5" | 60 mm | 160 mm | 150 mm | *5341118*  |

## Fork travel

Before changing rocker links, verify the fork is compatible with the rear wheel travel listed above (you may need to change forks).

**NOTE:** For EX to MX conversions, most stock forks can be upgraded to 160 mm travel with a new air spring.

## Shock stroke

Before changing rocker links, verify the shock is compatible with the shock stroke listed above.

**EX to LX requirements**

- RockShock — new shock with longer stroke
- Fox — increase travel limiting clip

# Change rocker links — remove rocker links

1. Remove the rear wheel.
2. If replacing, remove the fork.
3. Add padding between the seat tube/rocker bridge, seat stays/chainstay, and around the down tube (where the shock would hit it).

   **NOTICE:** Add padding in the locations shown below to avoid falling parts damaging the frame as you disassemble.

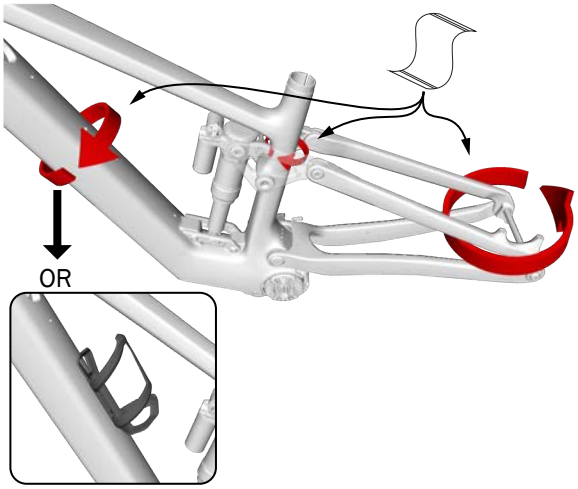


4. Loosen all rocker link fasteners and lower shock mount bolts.

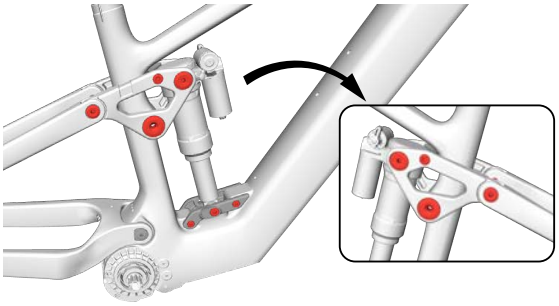

5. Remove the upper shock fasteners and spacers. Carefully lay the shock forward.

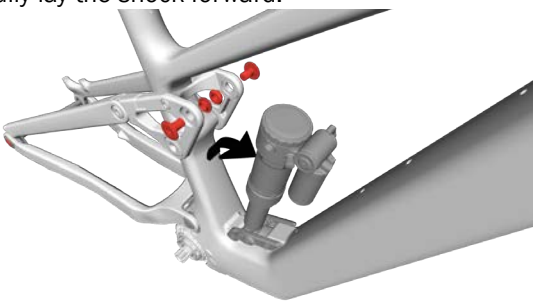

6. Remove the lower shock mount fastener, shock, and progression chip.

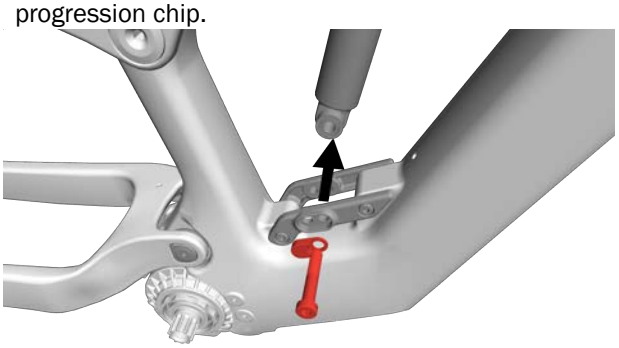

7. If you are replacing the lower shock mounts, remove them.

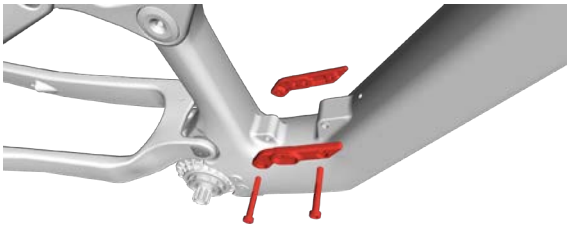

8. Remove the rocker hardware from the seatstays.

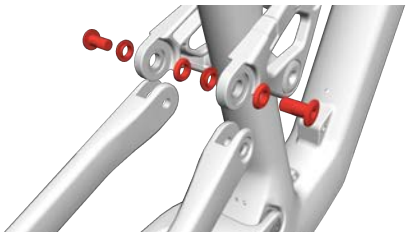

9. Remove the drive side rocker. Repeat for other side.

   **NOTE:** You will use the same rocker bridge for another set of rocker links.

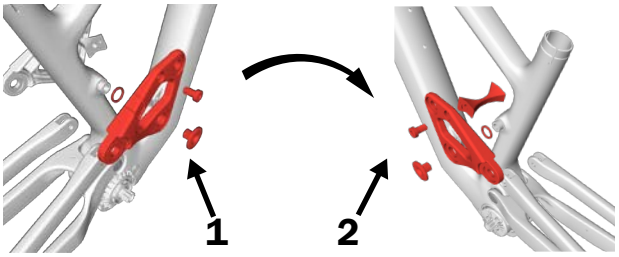

# Change rocker links — install rocker links

**BEFORE YOU BEGIN**: Inspect all parts for damage and replace if necessary. Clean all greased parts/surfaces.

**IMPORTANT:** Do not tighten any hardware more than hand tight. Overtightening the hardware can cause misalignment of the suspension system which can lead to creaking or binding.

1. Grease the frame and loosely install the drive side rocker link.

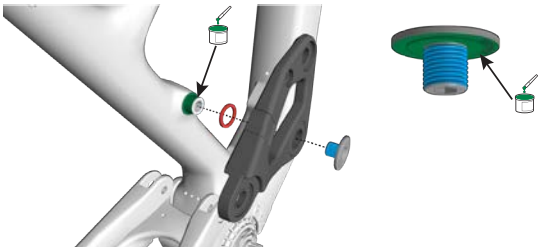

2. Grease the rocker bridge and insert it into the non-drive side rocker link. Then grease the frame and loosely install the non-drive side rocker link assembly.

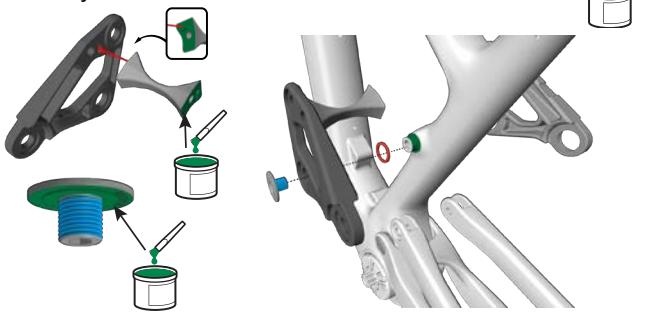

3. Loosely install the bridge bolts.

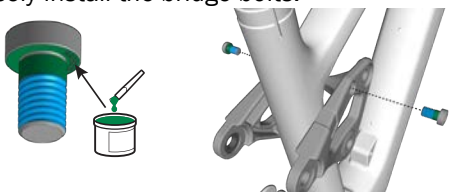

4. Insert the seatstay spacers and loosely install the seatstay bolts.

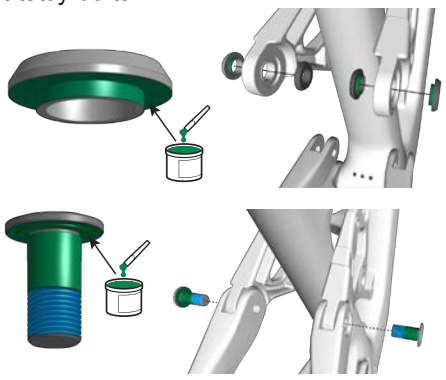

5. Grease the frame and loosely install the lower shock mounts. Then install the shock and progression chip.

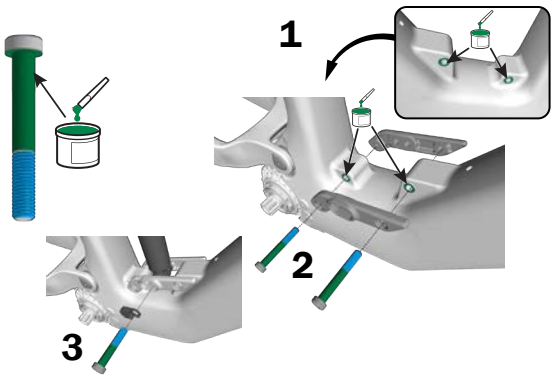


6. Insert the shock spacers and loosely install the shock bolts.

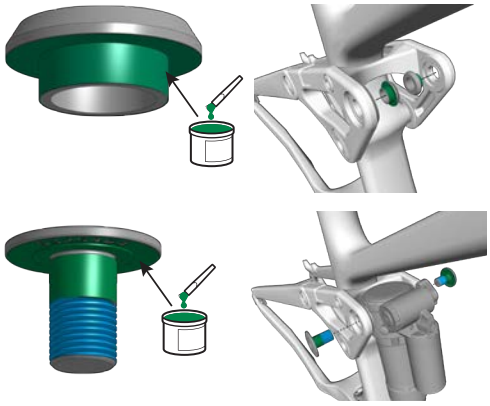

7. Install the fork and rear wheel.
8. Verify chain length. If there is slack in the smallest cog, reduce the chain length by two links (one inner and one outer).
9. Fully tighten all hardware following the procedure on Suspension system tightening on page 7.
10. If you change your rear wheel size, you must visit your local Trek retailer to have the e-system updated in TQ Dealer Software for the new wheel diameter. Not doing so may cause your bike to provide assist above the legally allowed speed limit, which makes it illegal. Or it may cause your bike to stop providing assist below the legally allowed speed limit.

# Routing — carbon

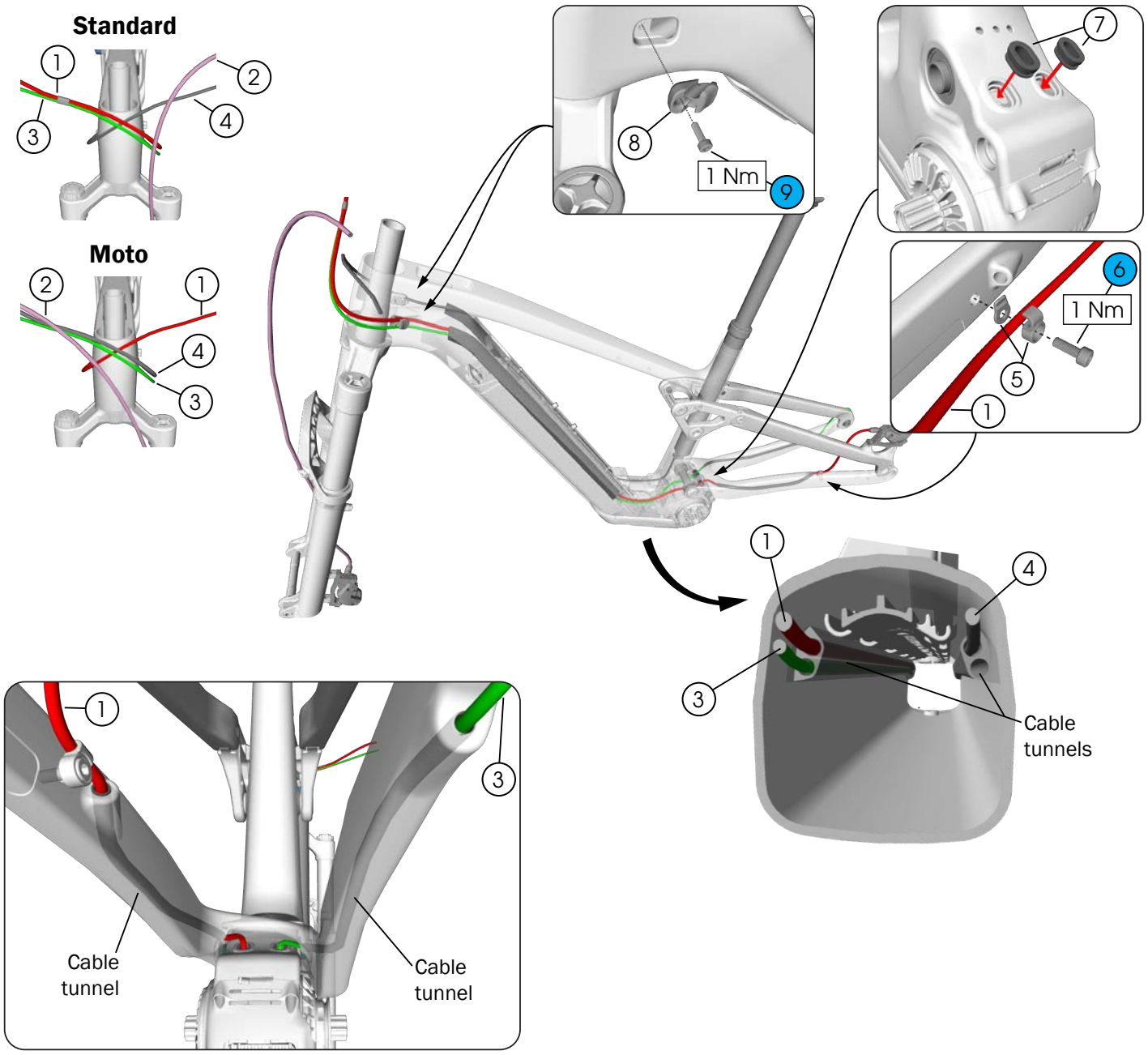


1. Rear brake hose
2. Front brake hose
3. Rear derailleur cable
4. Dropper seatpost cable
5. Cable guide
6. Fastener (M5 x 14 mm) — 4 — *5343654*
7. Grommets — *W5255861*
8. Control Freak cable guide — *W5317471*
9. Fastener (M3 x 10 mm) — *W545633* — 2.5

# Routing — alloy

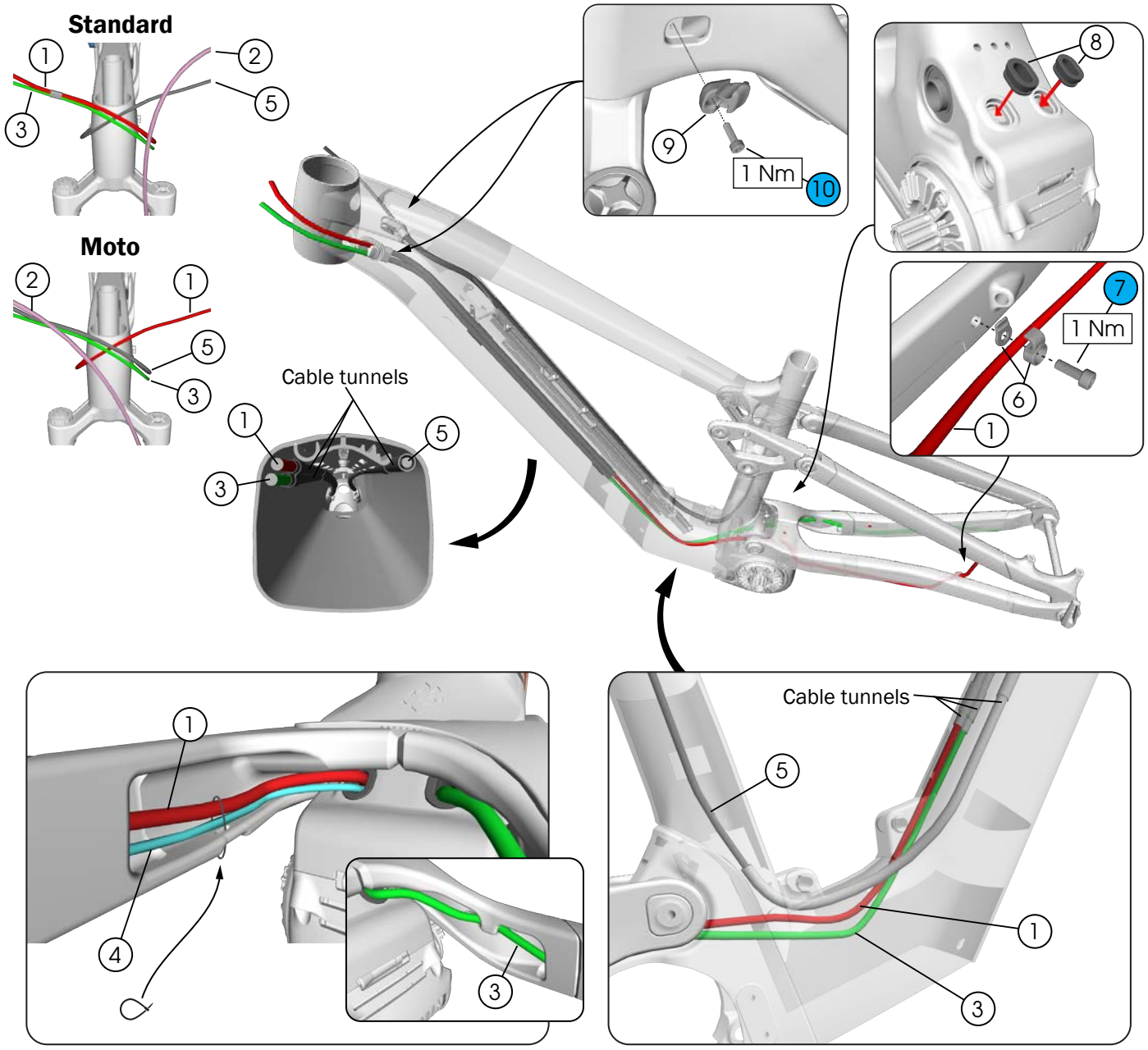


1. Rear brake hose
2. Front brake hose
3. Rear derailleur cable
4. Speed sensor cable
5. Dropper seatpost cable
6. Cable guide
7. Fastener (M5 x 14 mm) — *5343654*
8. Grommets — *W5255861*
9. Control Freak cable guide — *W5317471*
10. Fastener (M3 x 10 mm) — *W545633*

# Routing — e-system

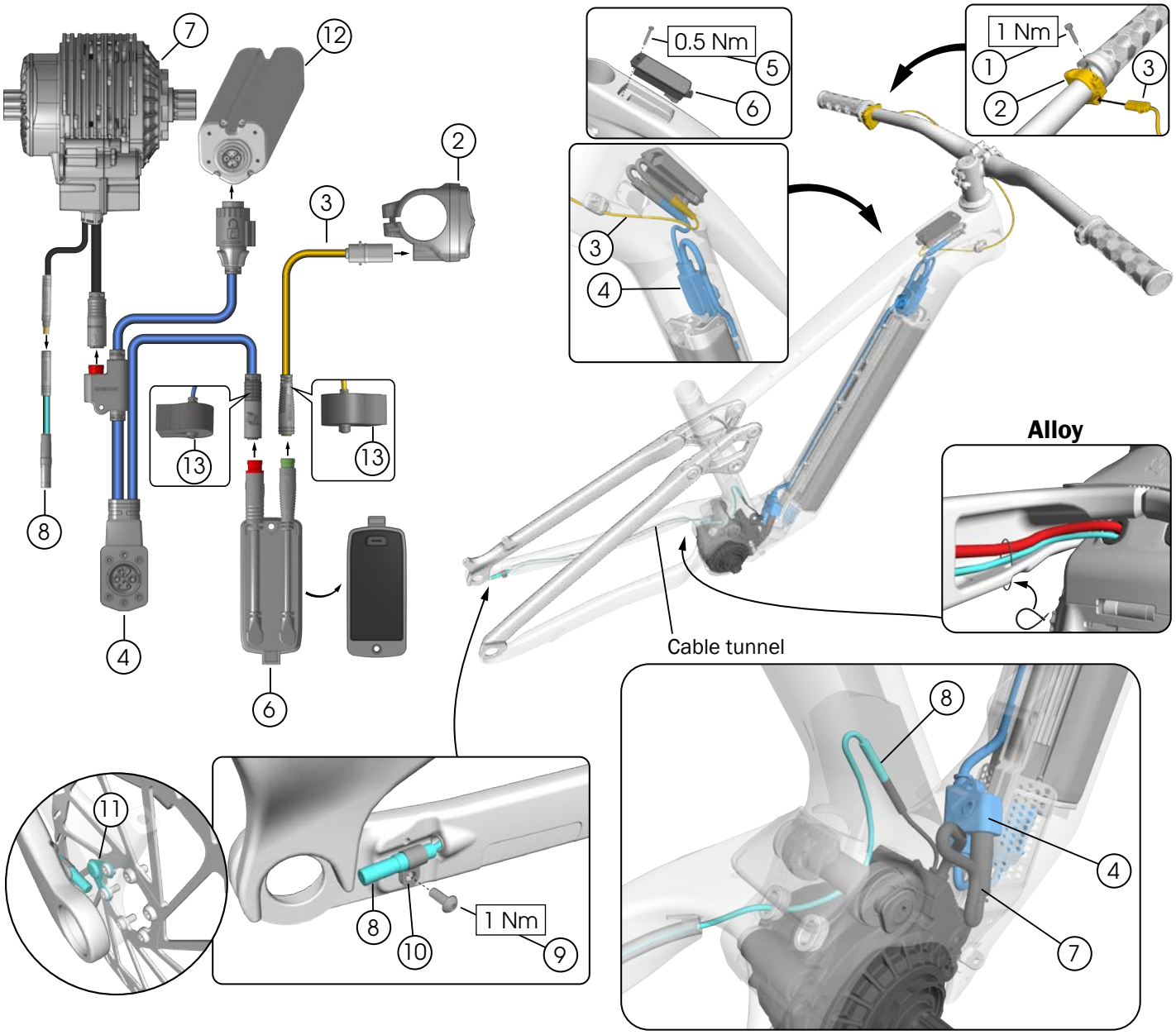


1. Fastener (M3 x 12 mm) — 2.5 — *5289561*
2. Remote — *5289561*
3. Remote cable — *5289561*
4. Wiring harness — *5289573*
5. Fastener (M3 x 20 mm) — T10 — *5289562*
6. Display (black/white) — *5289562*
7. Drive unit, HPR60 — *5343943*
8. Speed sensor — *5289567*
9. Fastener (M4 x 10 mm) — 2.5
10. Clip — *W5327061*
11. Magnet — *5289568*
12. Battery, 580 Wh — *W5317507*
13. Foam blocks — *5305634*

# Routing — wired AXS

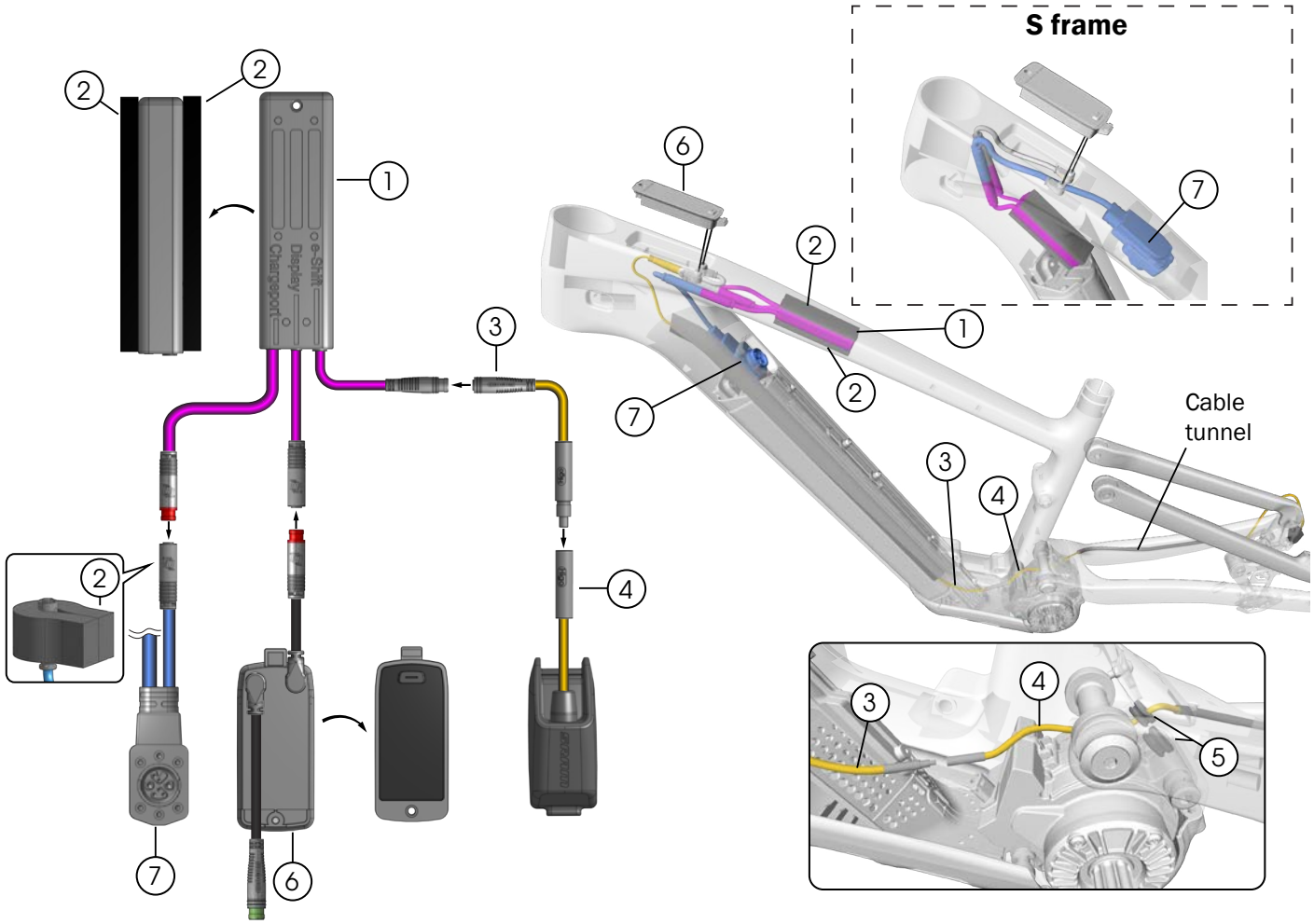


1. TQ Smart Box — *5289564*
2. Foam blocks — *5305634*
3. Cable adapter — *W5312855*
4. AXS cable (880 mm) — *W5312654*
5. Grommets — *W5255861*
6. Display (color) — *5343942*
7. Wiring harness — *5289573*

## Install Smart Box

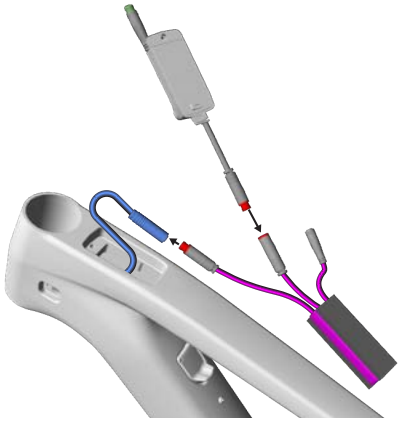

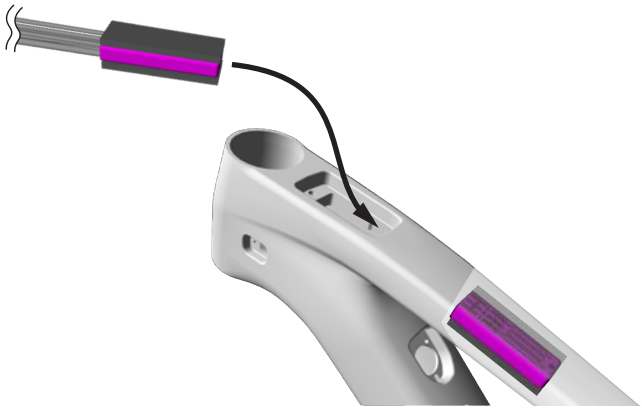

# Routing — Di2

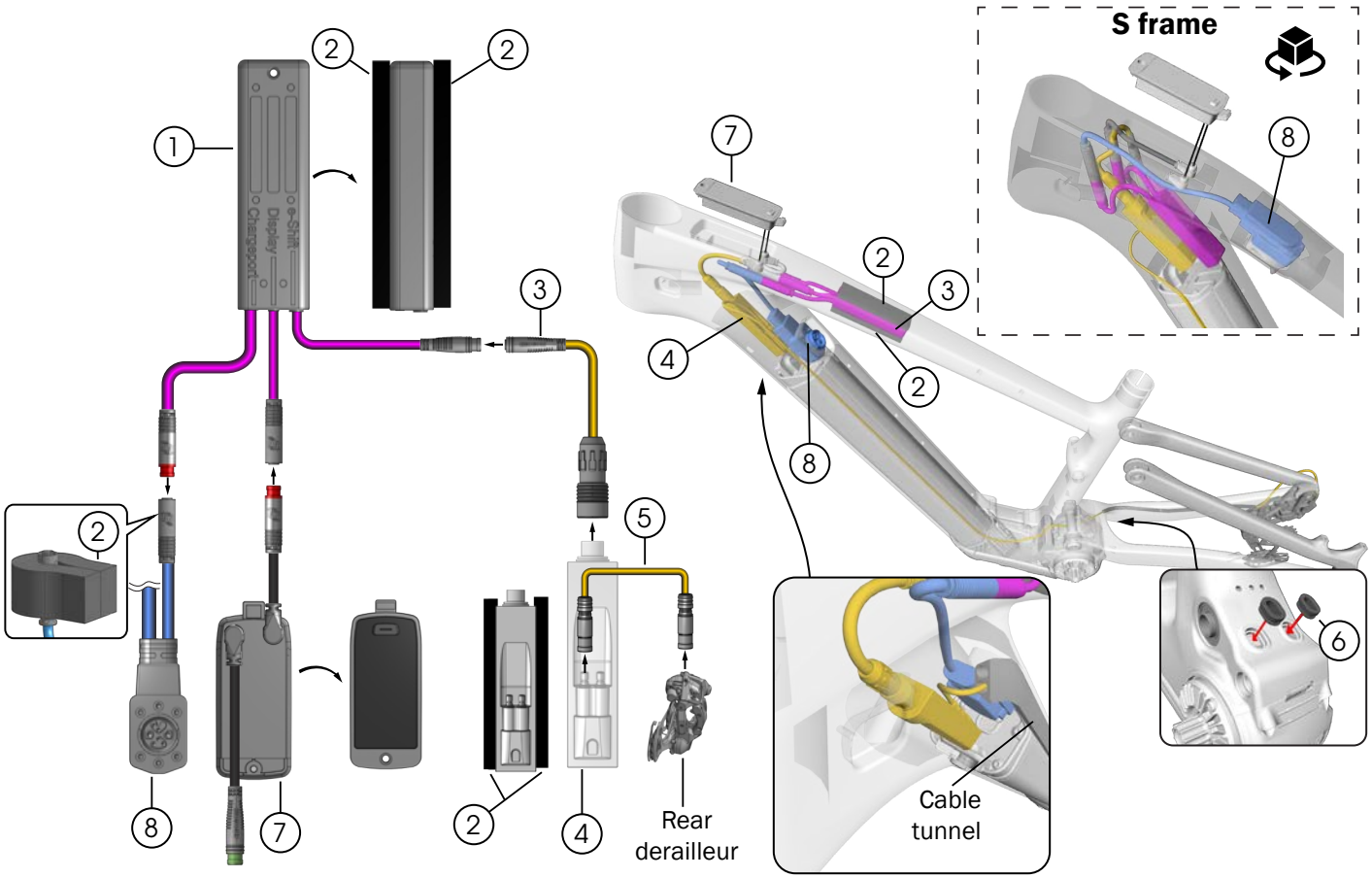


1. TQ Smart Box — *5289564*
2. Foam blocks — *5305634*
3. Di2 cable — *5289565*
4. CAN bus — **EW-EX310*
5. Di2 cable — **EW-SD300*
6. Grommets — *W5255861*
7. Display (color) — *5343942*
8. Wiring harness — *5289573*

**Shimano part number*

## Install CAN bus

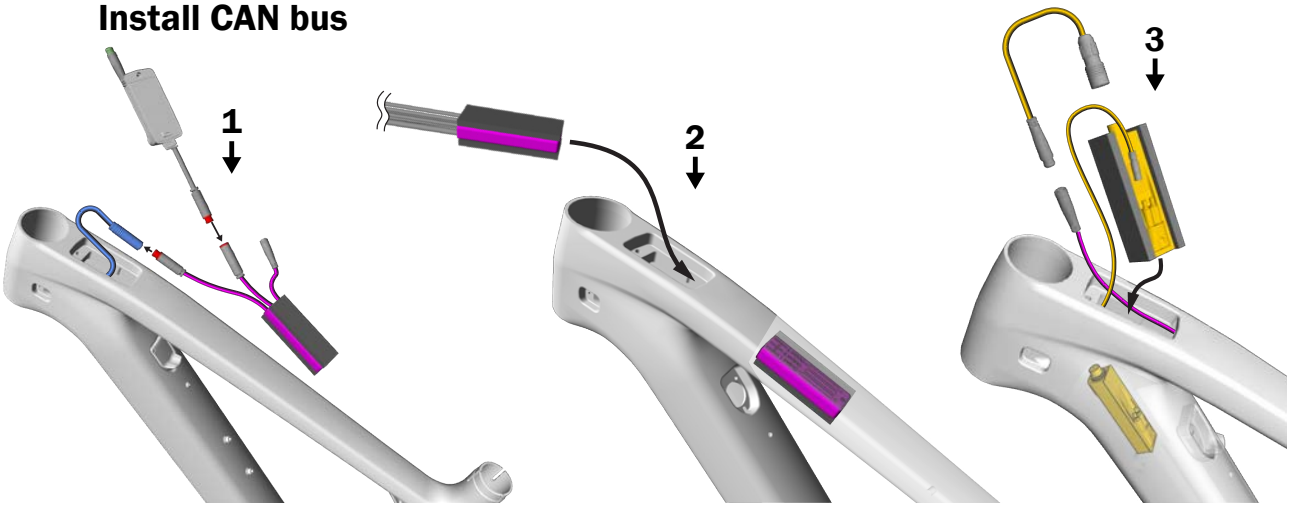

# Charge port cover

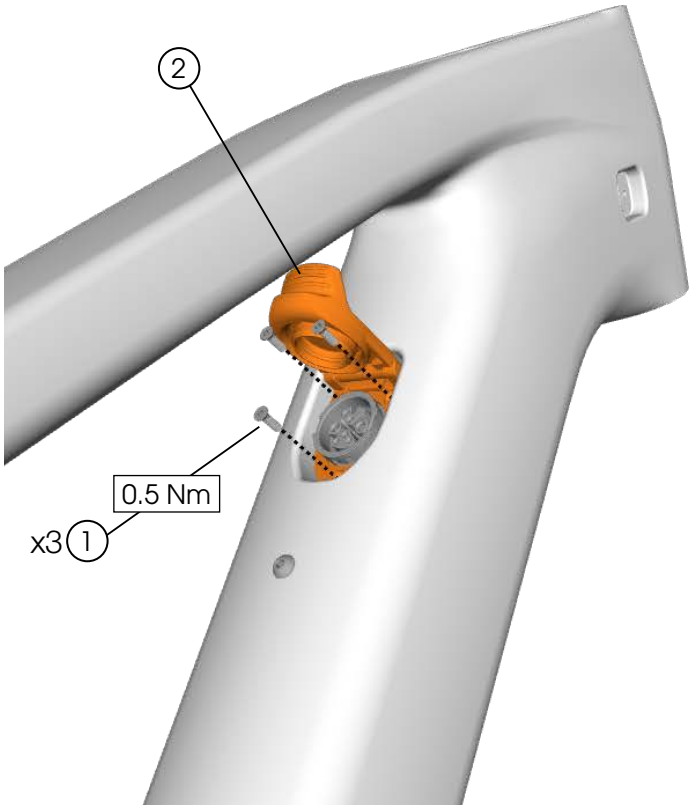


**S frame**



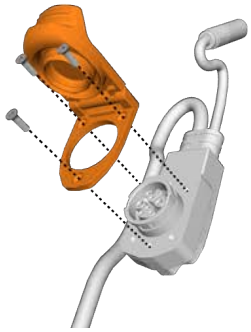

1 Fasteners (M2.5 x 8 mm) T8

2 Charge port cover

*5289578*

# Cable tray and motor covers

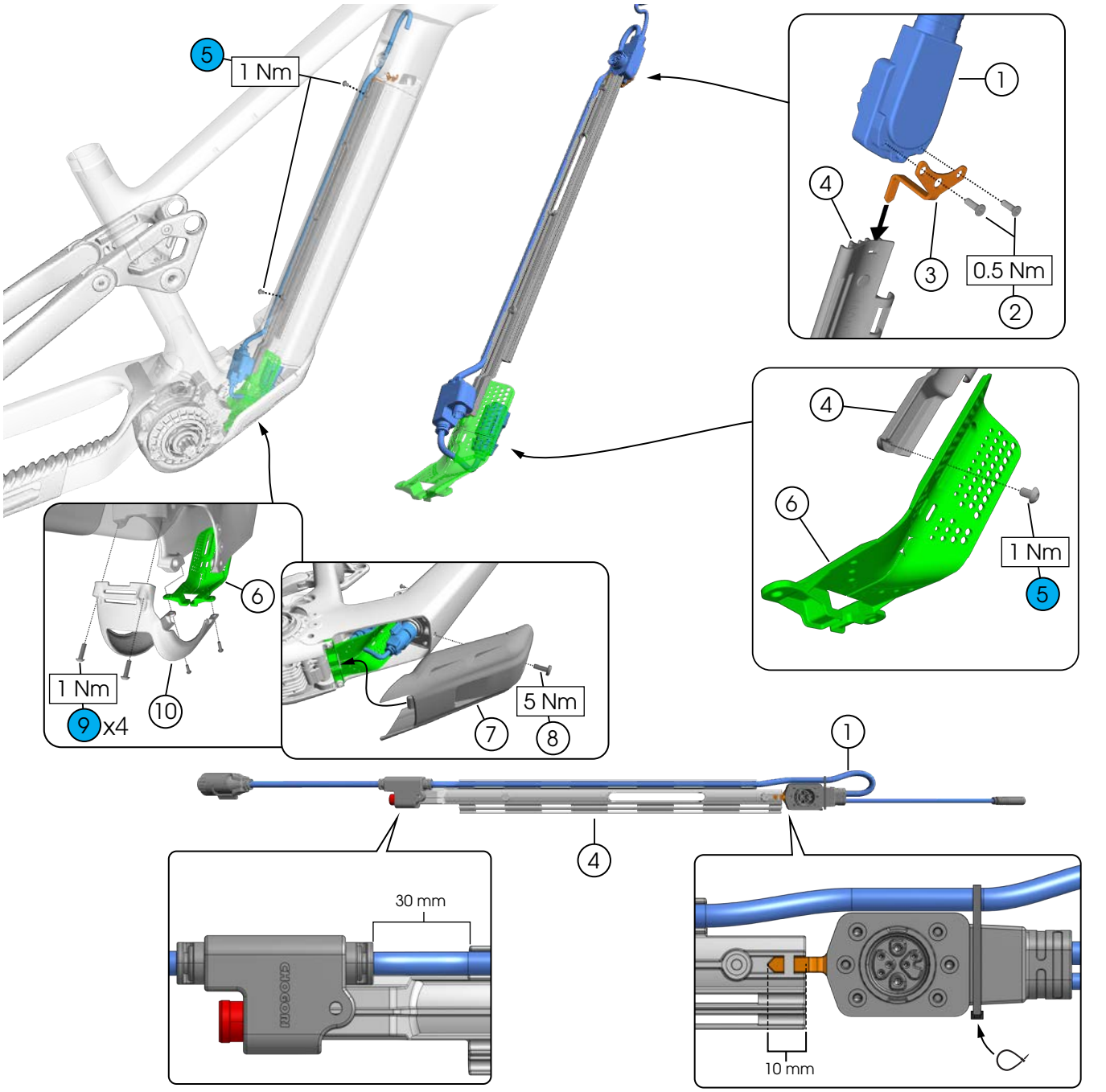


1. Wiring harness — *5289573*
2. Fasteners (M2.5 x 8 mm) — T8
3. Charge port bracket — *W5333205*
4. Cable tray — *W5328201*
5. Fasteners (M4 x 6 mm) — 2.5
6. Divider — *W5328202*
7. Battery cover — *W5328204*
8. Fastener (M6 x 16 mm) — *W5275266* — 4
9. Fasteners (M4 x 14 mm) — 2.5
10. Drive unit cover — *W5328203*

# Install the cable tray

**1.** Assemble the cable tray and wiring harness (see more detail on previous page).

**NOTE:** S frames do not use the charge port bracket (see Charge port cover on page 16).



**2.** Insert the cable tray assembly into the down tube and loosely tighten the top fastener using a hex tool to hold the assembly in place.

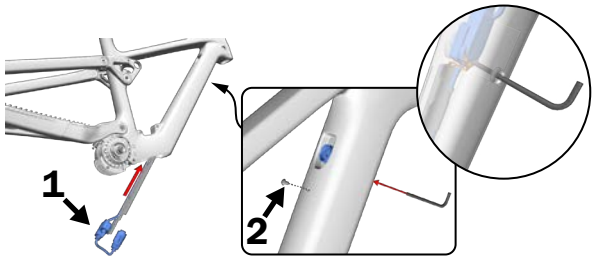


**3.** Loosely tighten the lower fastener using your hand to hold it in place.

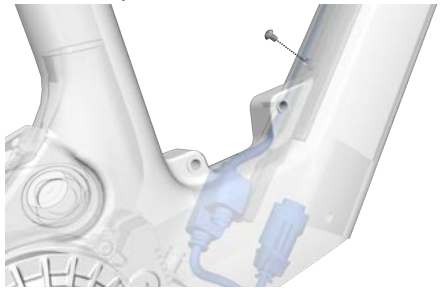

**4.** Install the charge port cover using a hex tool to hold the assembly in place.

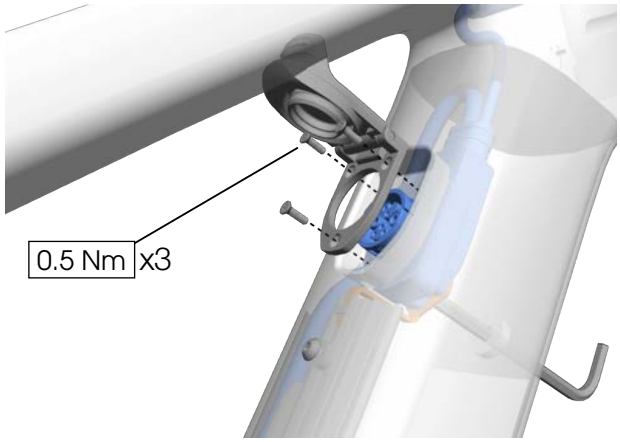


**5.** Fully tighten the two cable tray fasteners.

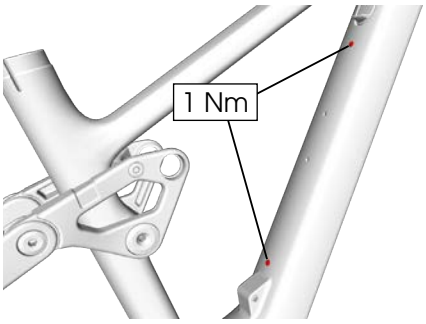


**6.** Install the motor cover and divider.

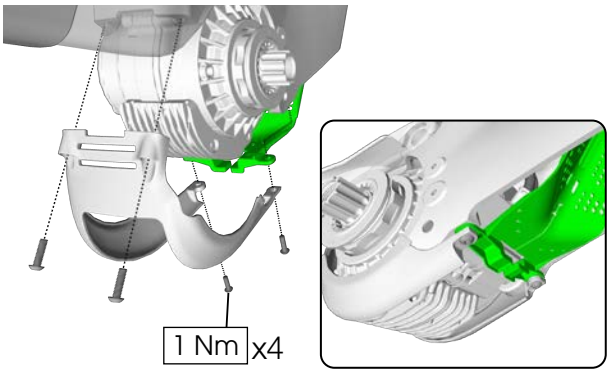


**7.** Connect the divider to the cable tray.

**NOTE:** Stretch the divider into the down tube to ensure the flexible section is tight.

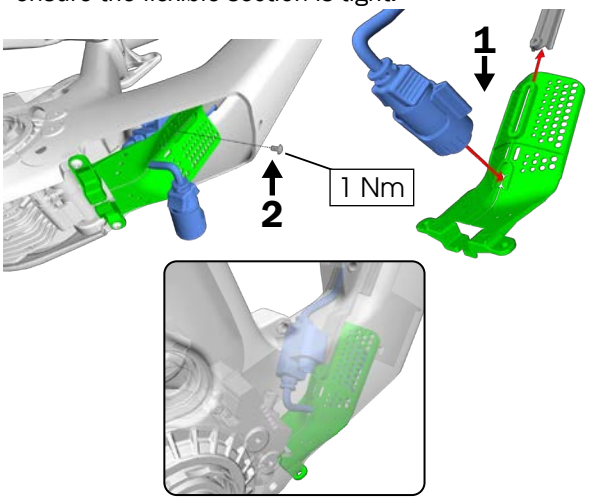


**8.** Install the battery (see Battery on page 21).

# Drive unit

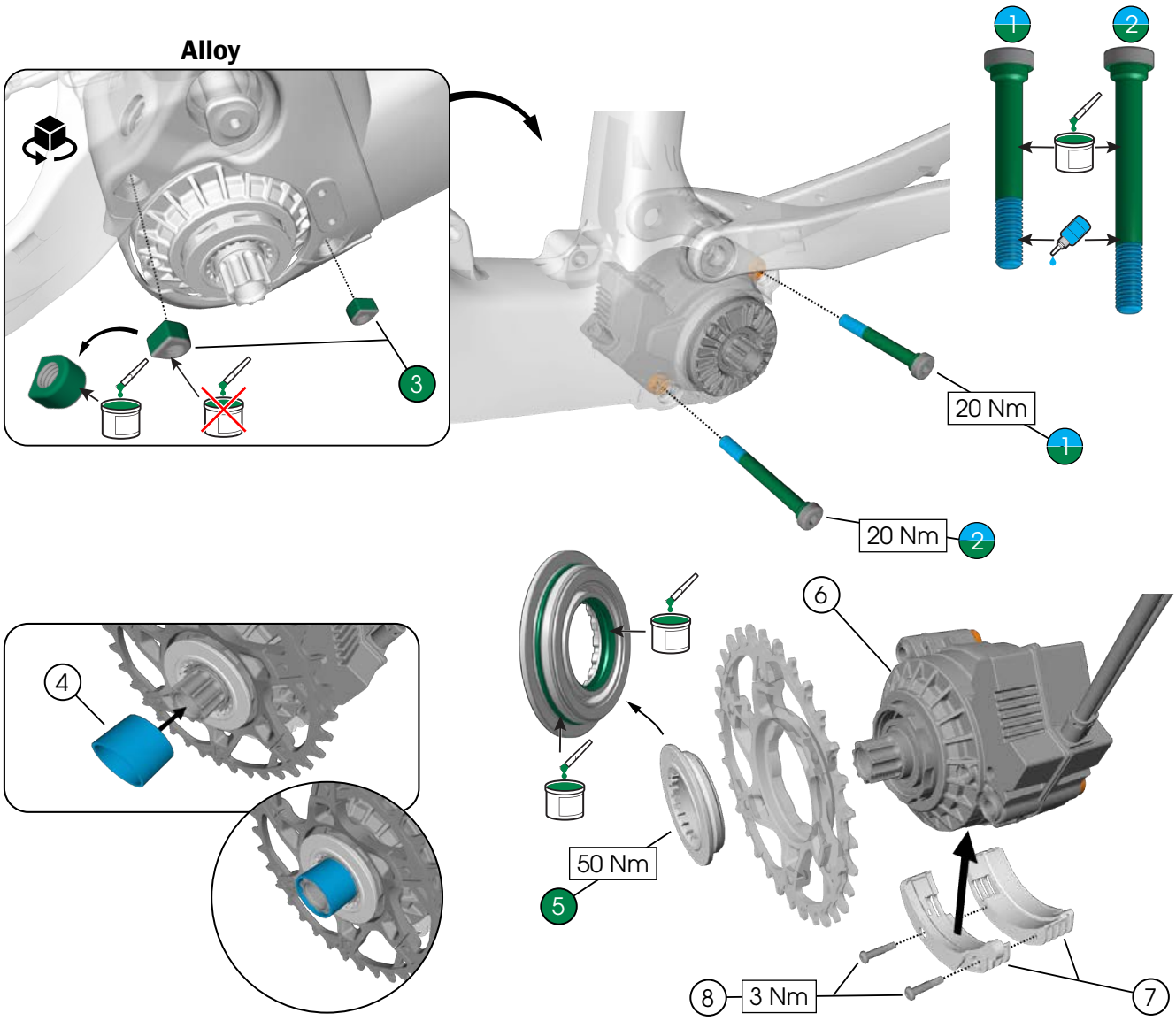


1. Fasteners (M8 x 62 mm) — 6
2. Fasteners (M8 x 76.5 mm) — 6
3. D-nuts — *W5304866*
4. Lockring sleeve (install only)
5. Lockring — BB20 — *5309454*
6. Drive unit, HPR60
7. Cooling fins — *5343944* — *5343943*
8. T20 security fasteners

## Removing the drive unit

Before removing the drive unit fasteners, unplug the drive unit from the speed sensor and wiring harness.

**IMPORTANT:** Unplug the speed sensor by the connector — not the cable itself — or you may damage the cables.

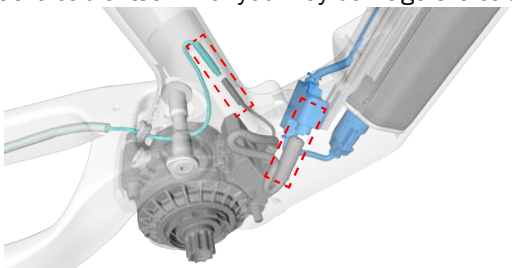

# Install the drive unit and cranks

If replacing the drive unit, measure the widths of the frame in the locations shown below. Then adjust the compensations crews to match the width you measured (about 58 mm front / 47.5 mm rear, depending on frame tolerances).

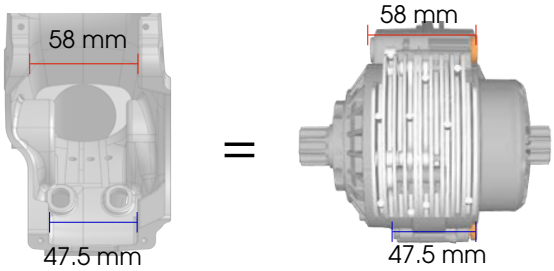


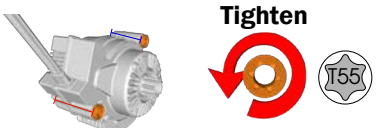


If replacing cooling fins — clean the underside of the drive unit before installing. See the HPR60 service manual at TQ-ebike.com > Manuals for further information.

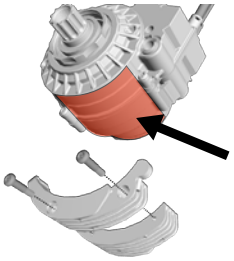

Route all cables and (including speed sensor) and install the cable tray assembly.

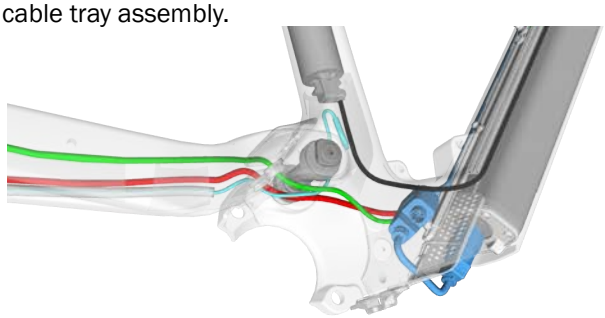

**1.** Connect the speed sensor and wiring harness to the drive unit plugs.

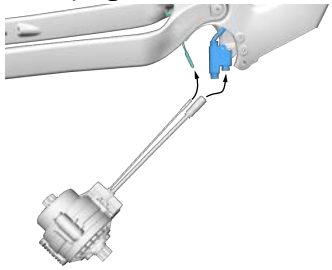

**2.** Install the drive unit.

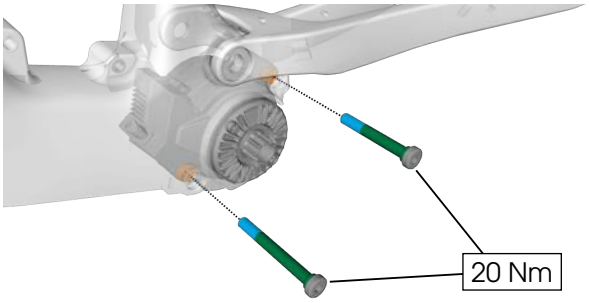


**3.** Install the non-driveside crank — aligning the notch on the spindle with the crank orientation.

**NOTE:** Installing the cranks in a different position may result in the assistance not working properly.

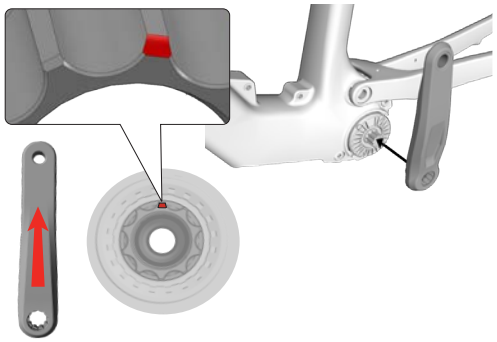

**4.** Install the lockring.

**IMPORTANT:** Failure to use the protective sleeve could damage the seal on the lockring and allow water to damage the drive unit.

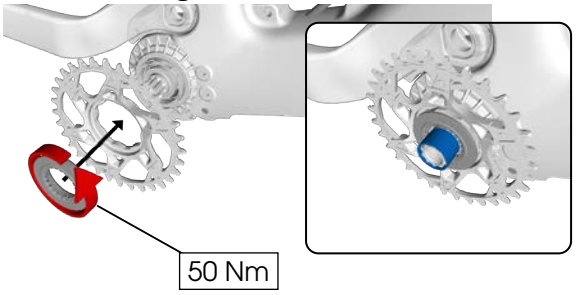


**5.** Install the driveside crank.

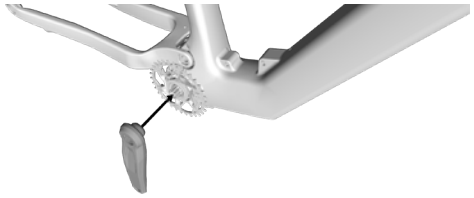

**6.** Install the battery cover, drive unit cover, and divider (see Cable tray and motor covers on page 16).

# Battery

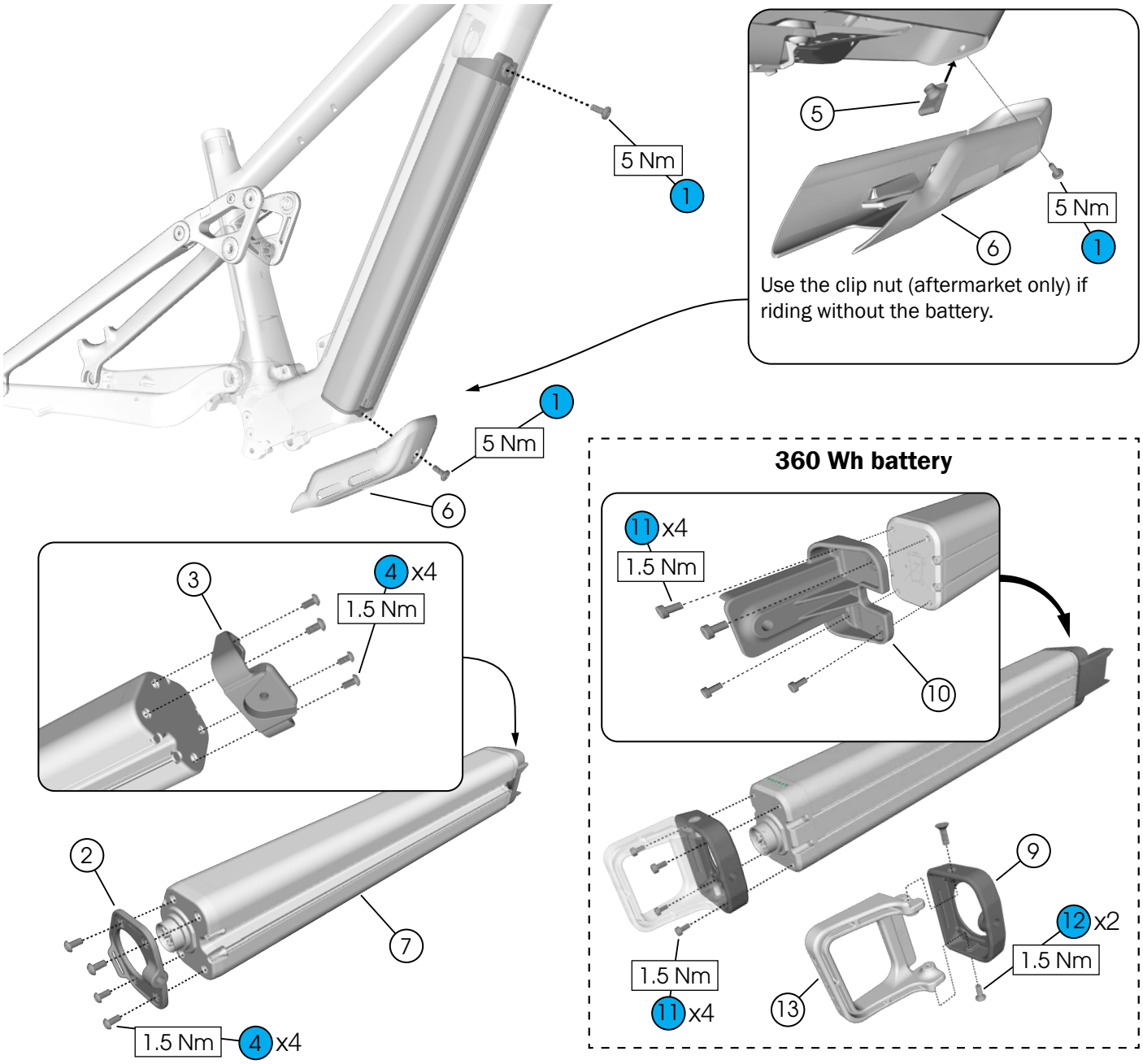


1. Fasteners (M6 x 16 mm) — *W5275266* — 4
2. End cap, lower — *W5316286*
3. End cap, upper — *W5332662*
4. Fasteners (M4 x 8 mm) — *W547053* — 2.5
5. Clip nut — *W5284890*
6. Battery cover — *W5328204*
7. Battery, 580 Wh — *W5317507*
8. Battery, 360 Wh — *5289554*
9. End cap, lower — *W5273187*
10. End cap adapter, upper — *W5316287*
11. Fasteners (M3 x 6 mm) — *W581747* — T10
12. Fasteners (M5 x 12 mm) — 2.5
13. Handle — *W5273188*

# Range extender

**NOTE:** Range extenders are sold aftermarket.

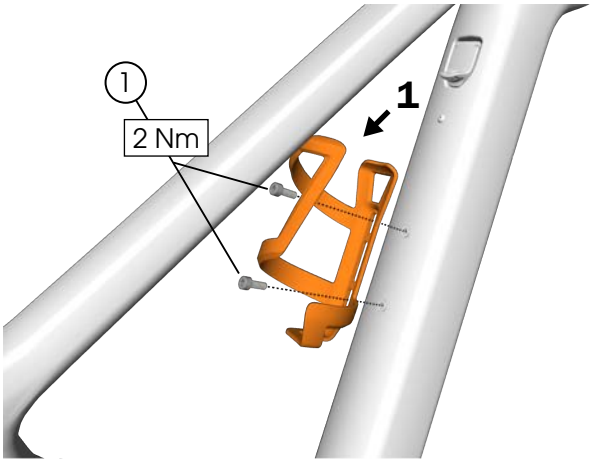


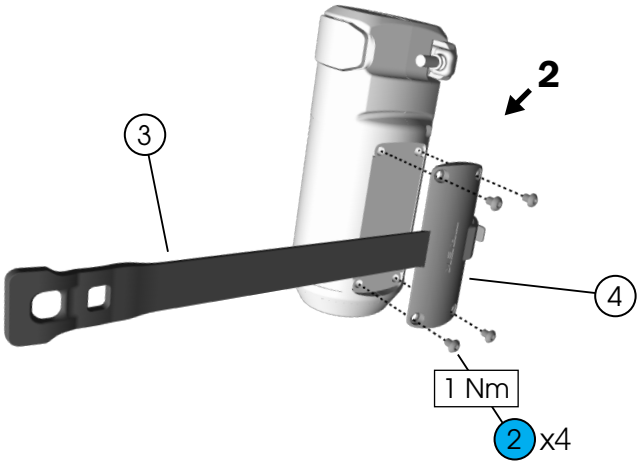


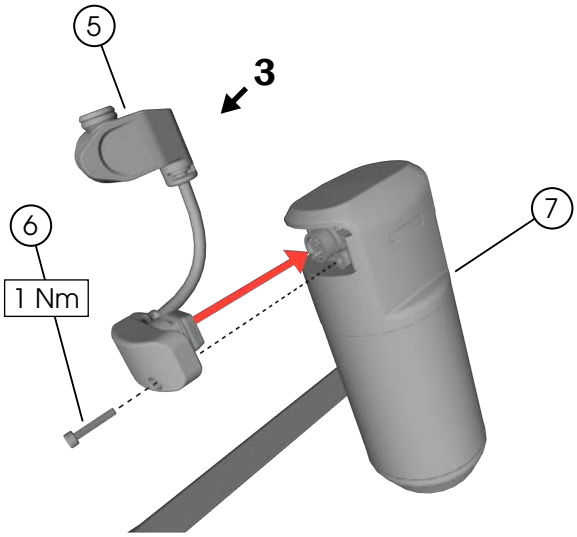


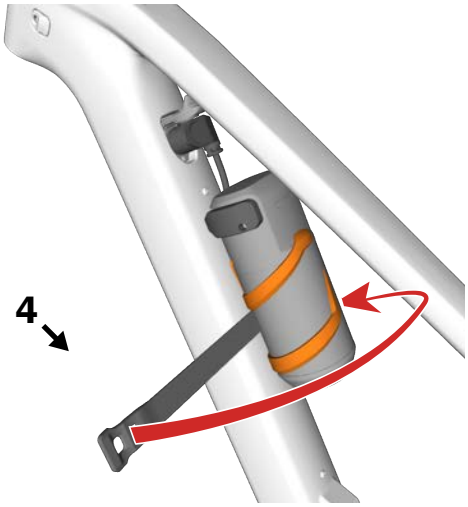


1. Fasteners (M5 x 8 mm) — *W596823* 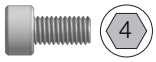 4
2. Fasteners (M4 x 6 mm) — *5331618*  2.5
3. Strap — *5299107*
4. Back plate — *5299107*
5. Cable — *5289575*
6. Fastener (M3 x 16 mm)  4 — *5289575*
7. Range extender battery — *5289555*

# Headset

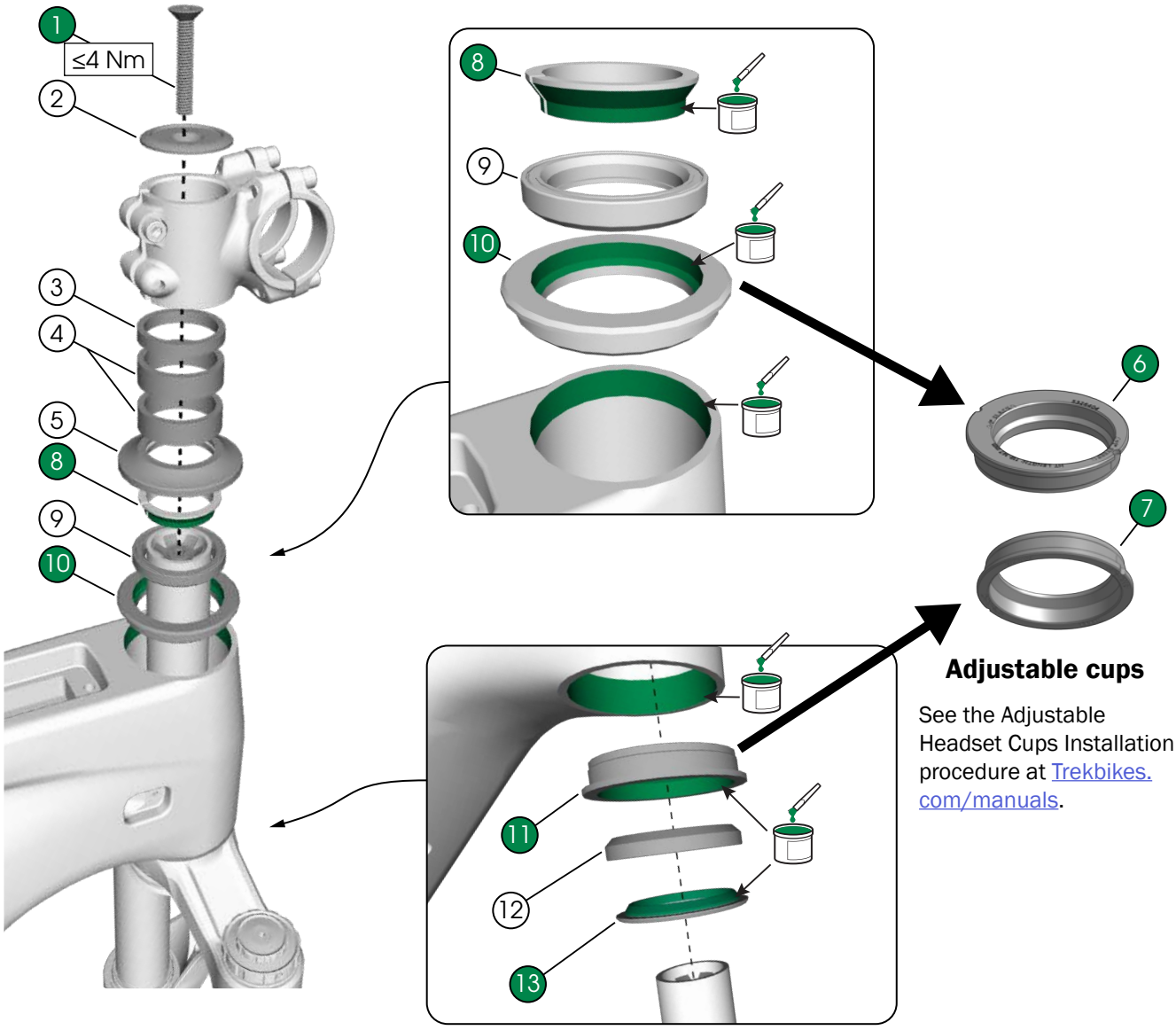


**Adjustable cups**

See the Adjustable Headset Cups Installation procedure at Trekbikes.com/manuals.

1. Fastener (M6 x 35 mm)
2. Top cap
3. Spacer (5 mm)
4. Spacers (10 mm) — *W547432*
5. Bearing cover, upper — *W5275173*
6. Bearing cup, upper (+/– °1)
   - 90-117 mm — *W5326405*
   - 118-147 mm — *W5326404*
   - 148-175 mm — *W5326406*
7. Bearing cup, lower (+/– °1) — *W5294449*
8. Compression ring — *W532842*
9. Bearing, upper — *W531676*
10. Bearing cup, upper — *W5304949*
11. Bearing cup, lower — *W5304949*
12. Bearing, lower — *W532843*
13. Crown race — *W532844*

*W5344366*

# Guards

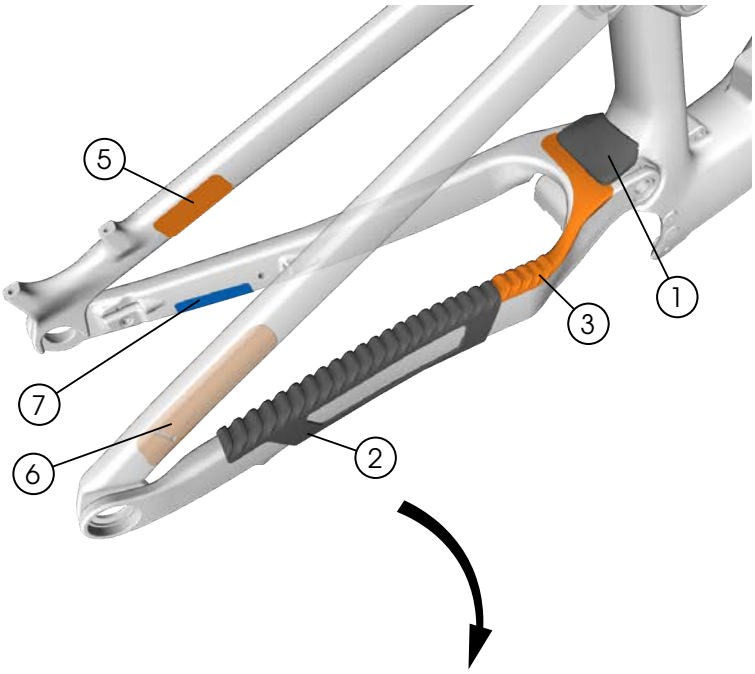


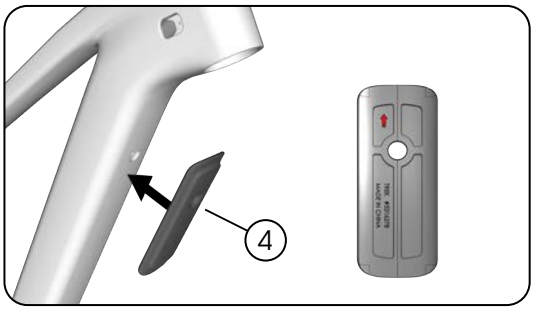


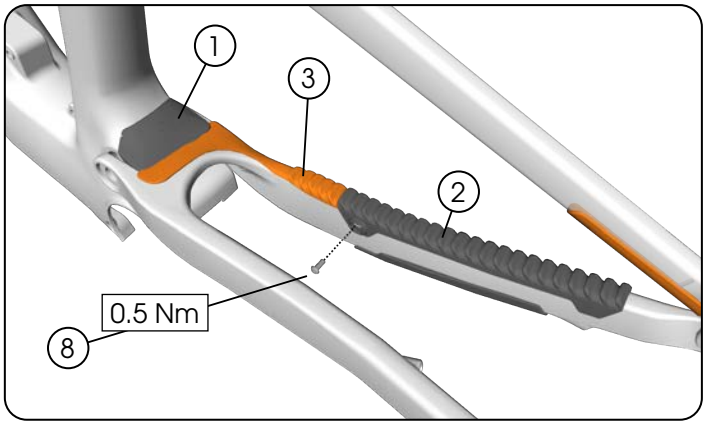


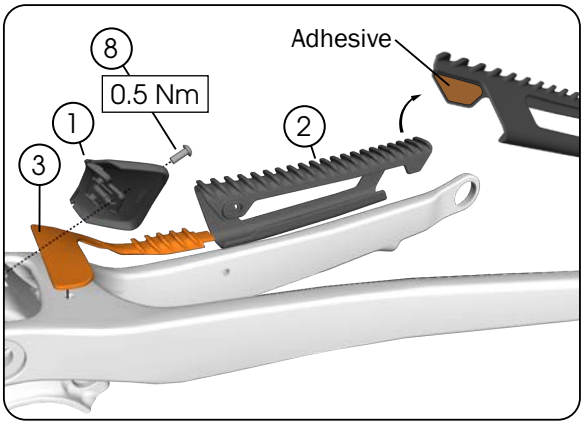


1. Gap guard — *5330875*
2. Chainstay guard — *5332532*
3. Yoke guard — *W5331332*
4. Shuttle guard — *5316278*
5. Rub armor — *W326986*
6. Seatstay armor — *W5255862*
7. Rotor guard — *W580881*
8. Fasteners (M4 x 10 mm) — *W575056* 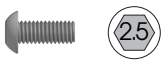


## Adhesive guards 2 3 4 5 6

Use isopropyl alcohol to clean the frame surface where the guard attaches. Wait for the alcohol to dry before applying the guard.

**NOTICE:** Do not clean the entire frame with isopropyl alcohol. Isopropyl alcohol could damage the paint.

## Bonded guard 7

Use sandpaper to roughen the backside of the guard and remove remnants of the old guard from mating surfaces. Then use a two-part epoxy to attach the guards following the manufacturer's instructions.

# Chainguide

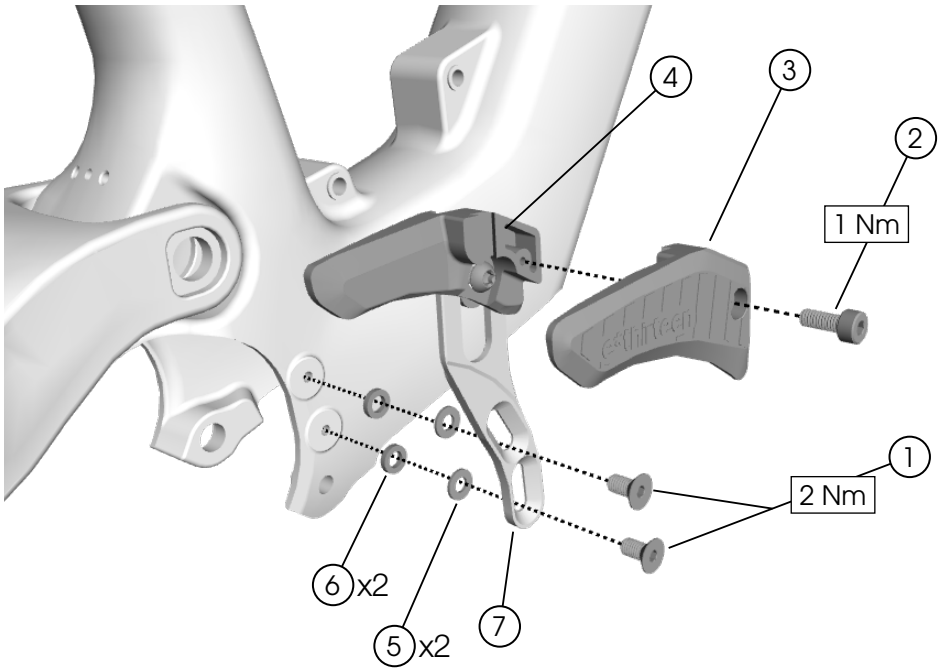


**Rotate**

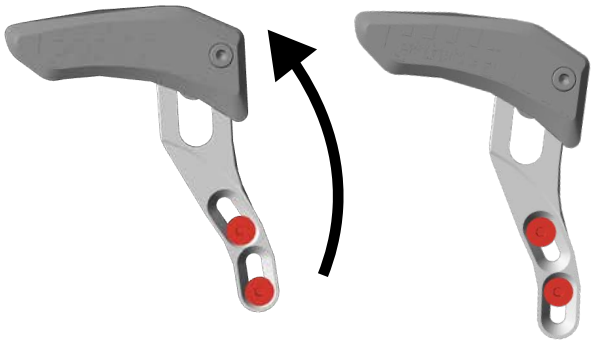

**Raise/lower**

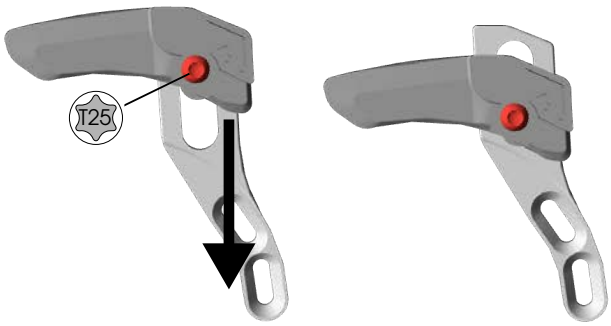


1. Fasteners
2. Fastener
3. Chainguide, outer
4. Chainguide, inner
5. Washers (M5)
6. Spacers (2 mm)
7. Arm

T25
3

*W5276728*

# Install the chainguide

**BEFORE YOU BEGIN**

Remove the cranks and chainring.

**1.** Attach the inner chainguide assembly to the frame and rotate counterclockwise to the lowest position. Then tighten the fasteners.

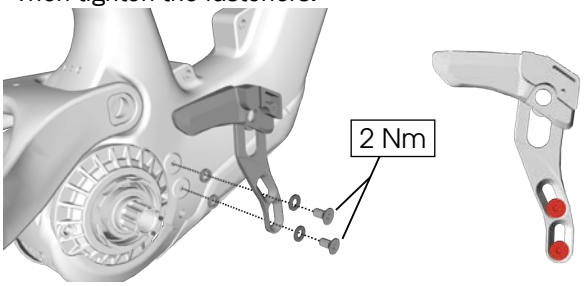


**2.** Slide the chainring onto the drive unit — do not install the lockring. Then wrap the chain around the chainring.

**NOTE:** For steps 2-4, make sure the chainring is fully seated on the drive unit to ensure proper alignment of the chainguide.

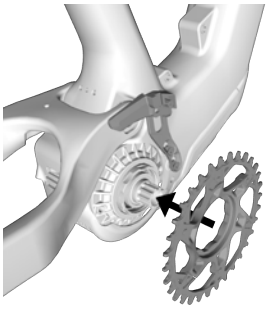

**3.** Install the outer chainguide.

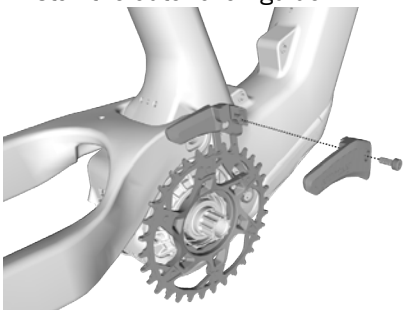

**4.** Verify the chainring is in the middle of the chainguide (front and back). Add or remove spacers as necessary (between chainguide arm and the frame).

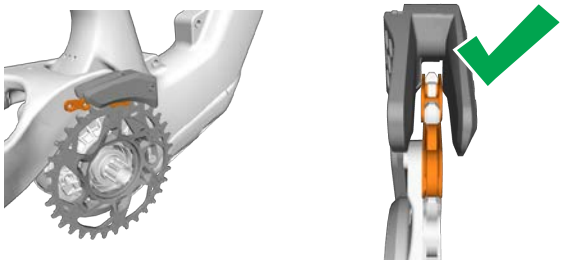

**5.** Remove the outer chainguide.

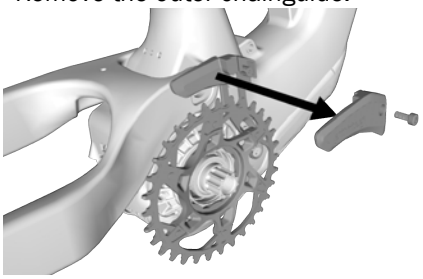

**6.** Raise or lower the chainguide until it is 1-2 mm above the chain (if necessary). Then tighten the fastener.

**NOTE:** You may need to remove the chain to reach the fastener.

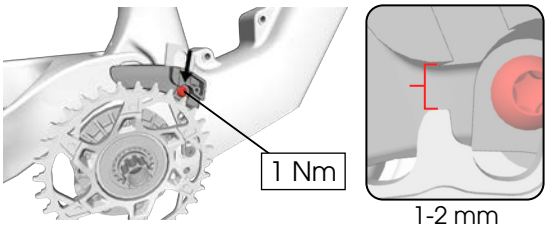


**7.** Attach the outer guide

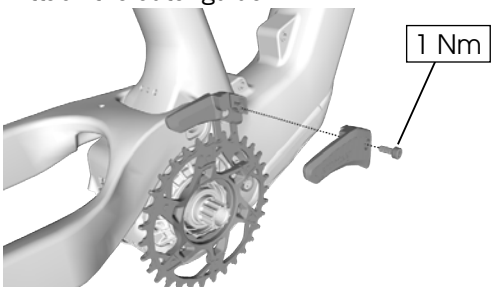


**8.** Install the lock ring and crank arms (see Install the drive unit on page 20).

# Specifications

## Frame

| | | Fuel+ |
|---|---|---|
| **Hub OLD** | Front | 110 mm |
| | Rear | 148 mm |
| **Fork steerer tube OD** | Upper | 28.6 mm / 1-1/8" |
| | Lower | 38.8 mm / 1-3/8" |
| **Brake rotor diameter min/ max** | Front | Fork-specific |
| | Rear | 180/203 mm |
| **Tire width max 29"** | | *2.5" / 63.5 mm |
| **Fender compatible** | Rear | No |
| | Front | Fork-dependent |
| **Dropper post compatible** | | Yes |

**as measured when the tire is seated on the rim*

## Fork

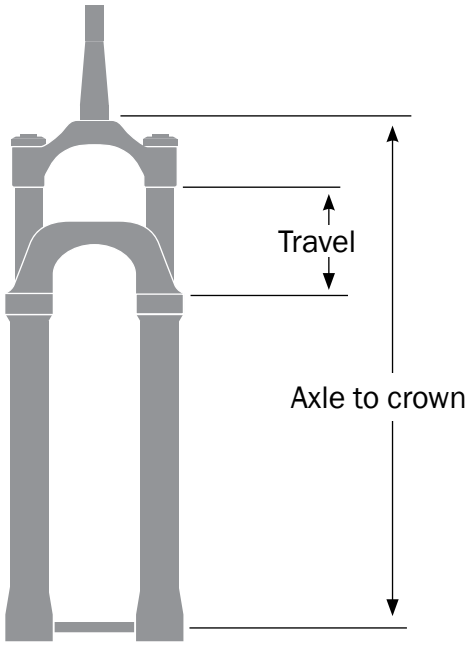


| Axle to crown | | Travel max |
|---|---|---|
| Maximum | 586 mm | 170 mm |

**Recommended sag:** Refer to the suspension calculator at Trekbikes.com/suspension-calculator.

## Seatpost

**WARNING**

Always follow the seatpost manufacturer's minimum insertion recommendation. Failure to follow the recommendation could cause damage to the seatpost and result in injury to the rider.

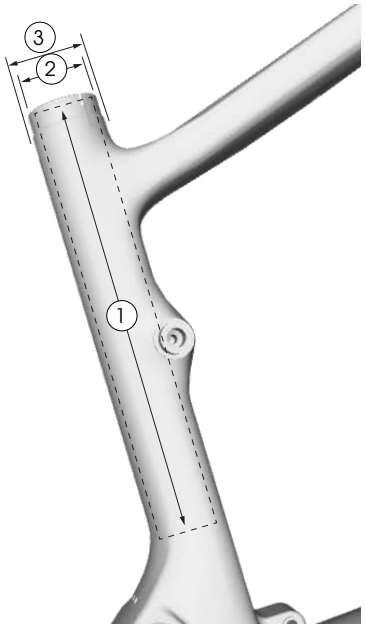


| | | Carbon | Alloy |
|---|---|---|---|
| ① **Maximum insertion** | **S** | 280 mm | 280 mm |
| | **M** | 310 mm | 305 mm |
| | **L** | 330 mm | 330 mm |
| | **XL** | 365 mm | 365 mm |
| | **XXL** | 385 mm | — |
| ② **Seatpost OD** | | 34.9 mm | |
| ③ **Seatpost clamp ID** | | 39.7 mm | |

## Chainline/chainring

| Chainline | Max chainring teeth (T) | | |
|---|---|---|---|
| | Small | Large | Single (1x) |
| 55 mm | — | — | 34T |