

2023 FUEL EXE

SERVICE MANUAL

Rev 4 September 2023

Contents



Safety

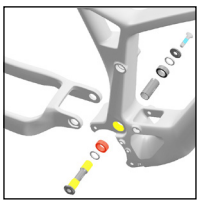

Main pivot and chainstay



Guards and water bottle mounts

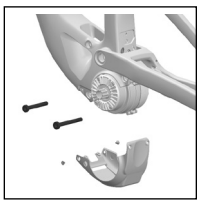

Drive unit and cranks



Battery

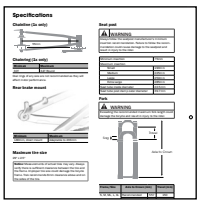

Specifications



Derailleur hanger

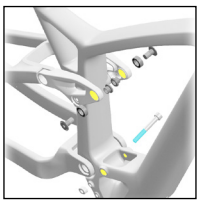

Rear shock

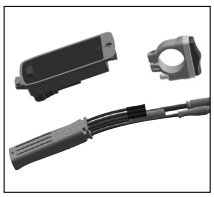

Remote, display, and Smart Box

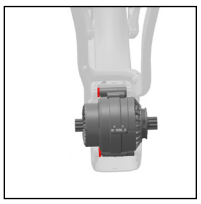

Adjust the compensation screws

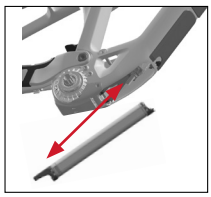

Remove and install the battery

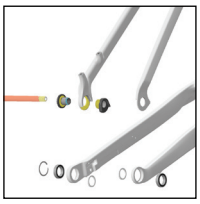

Active Braking Pivot (ABP)

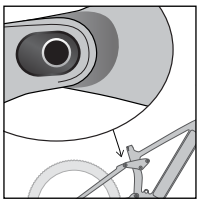

Adjust the geometry



Charge port cover

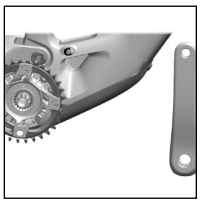

Re-installing the cranks

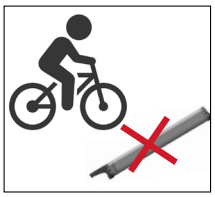

Ride the bike without the battery

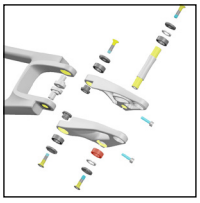

Rocker pivot and seatstay

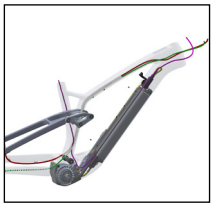

Brake, derailleur, and dropper post routing



Wiring harness and cable tray organizer



Speed sensor

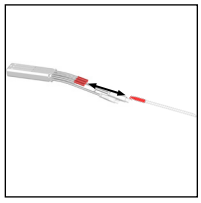

Connect lights to the TQ Smart Box

Copyright 2022 Trek Bicycle Corporation All Rights Reserved

Safety

WARNING

Properly tighten hardware

Always tighten hardware to the specified torque. Over-tightening hardware could deform or break the hardware or components. Under-tightening hardware could cause hardware or components to become loose. Either situation could damage the bicycle and result in injury to the rider.

WARNING

Reapply threadlocker

All reused-fasteners with pre-applied threadlocker must be cleaned with isopropyl alcohol and have new thread-locker applied before re-assembly. If threadlocker is not applied, the fasteners may loosen which could damage the bicycle and result in injury to the rider.

Legend


Apply grease


Do not apply grease


Apply threadlocker

Nm
Torque


Hex tool


Torx tool


Drift size

Zip tie

Derailleur hanger

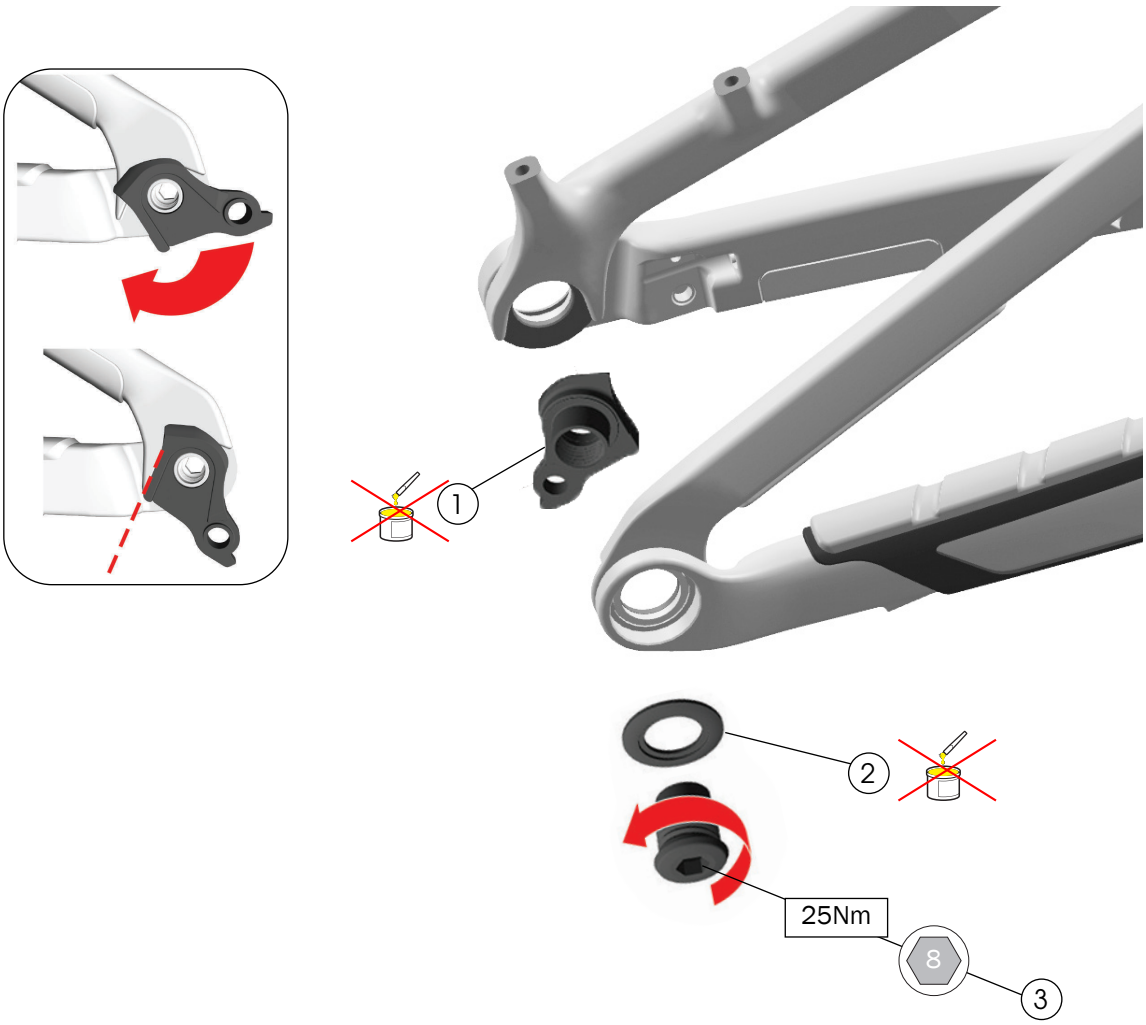

1	Derailleur hanger	– W5271425
2	Washer, 30mm	
3	Bolt	

Tools

- 8mm hex tool
- Torque wrench (left-hand thread) with 8mm hex bit

WARNING

Do not apply grease to the derailleur hanger or bolt.

This bicycle frame is designed to use a Universal Derailleur Hanger (UDH).

NOTICE: The washer is frame-specific. Install only the washer size specified.

NOTICE: Do not over-tighten. Over-tightening the bolt could cause the hanger to break.

For additional information about the UDH, refer to the SRAM user manual at sram.com.

Active Braking Pivot (ABP)

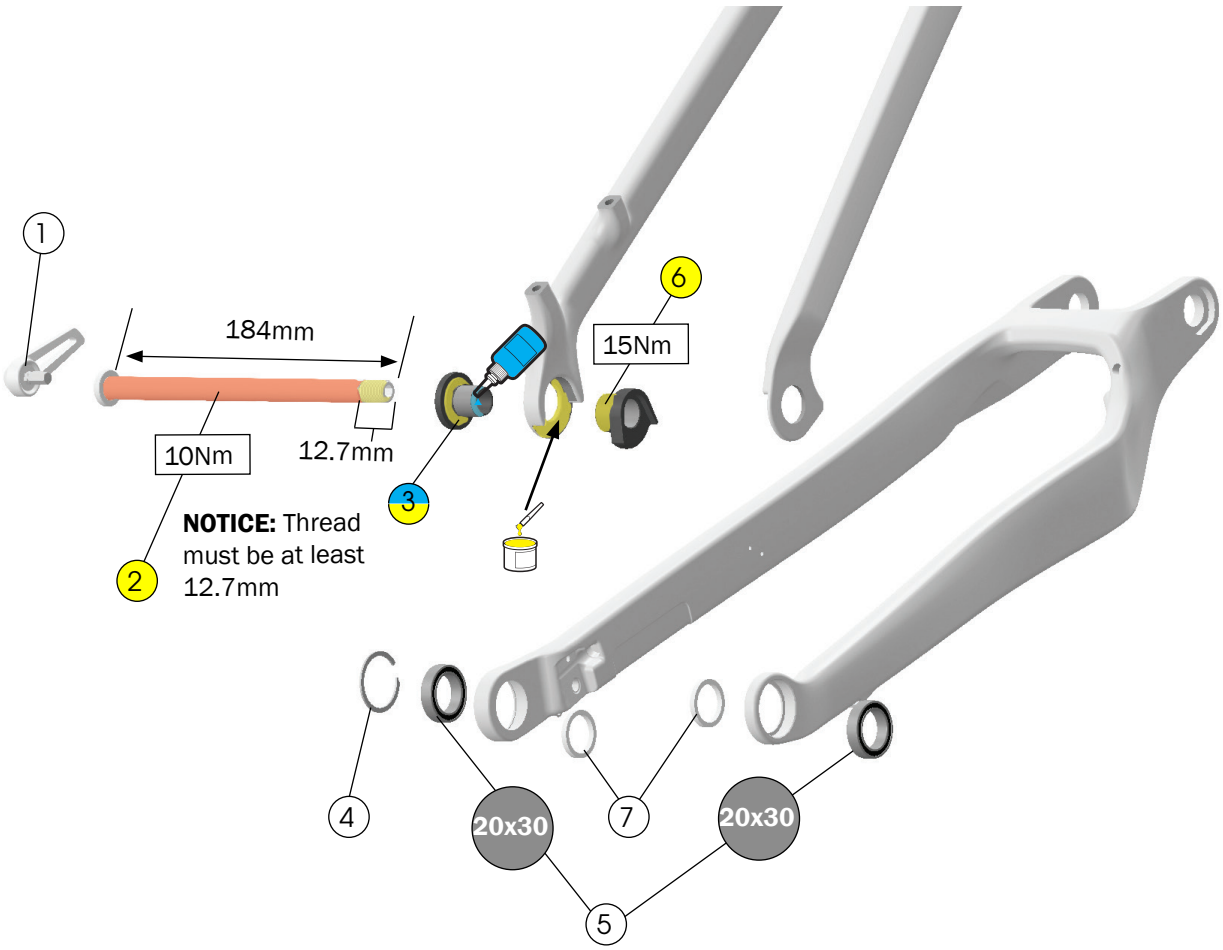

1. Lever — W573860
2. Thru axle — W583469
3. Non-driveside ABP bolt — W5251141
4. Retaining ring — W5251279
5. Bearings — W5256340
6. ABP Non-driveside guide nut — W5269707
7. Spacers (for use with carbon frame only) — W583422

— W5272776

Tools

- Bearing press
- Cassette lockring tool
- Grease
- Threadlocker

Rocker pivot and seatstay

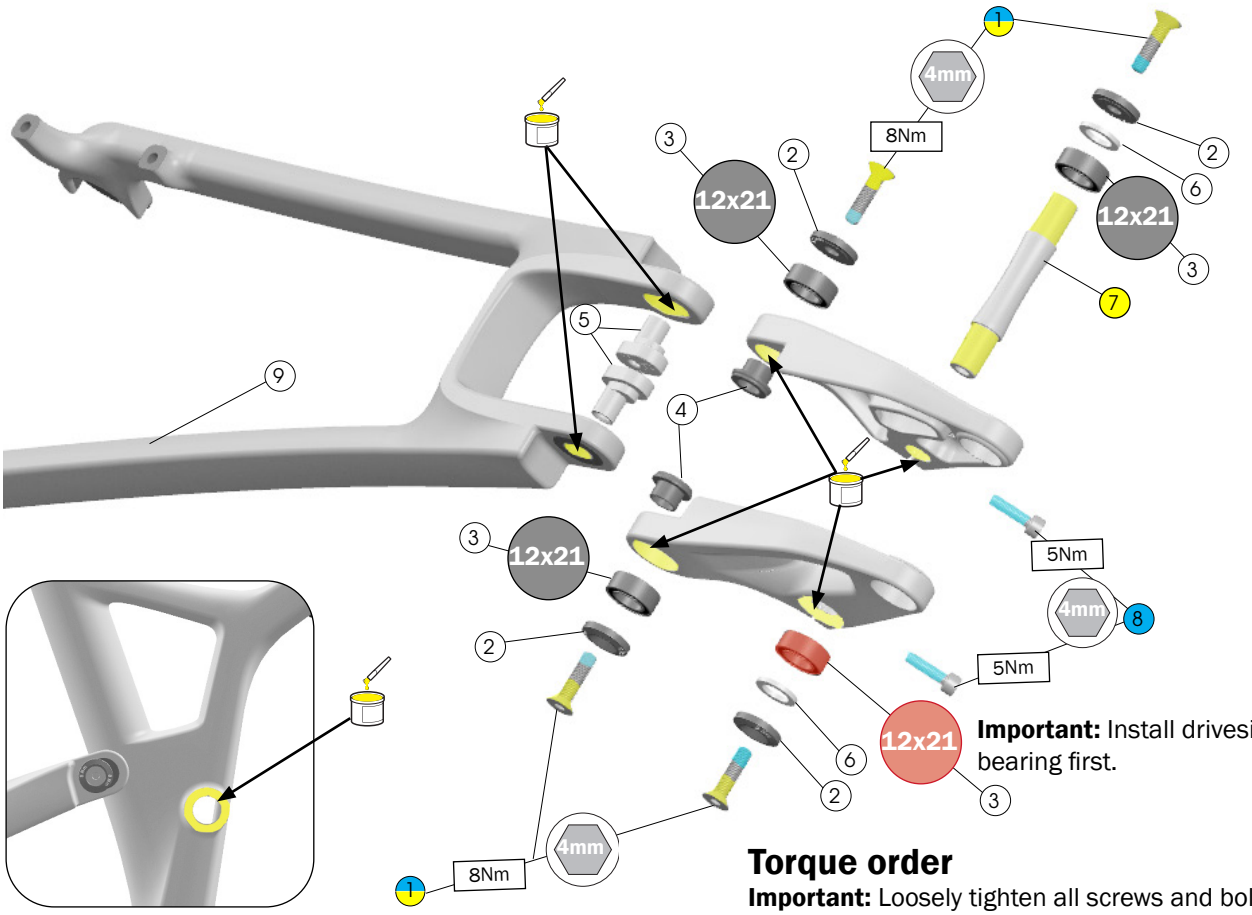

Important: Install driveside bearing first.

Torque order

Important: Loosely tighten all screws and bolts, then torque in the order shown below. To achieve proper torque on all bolts, rocker link pinch bolts (8) must be torqued last.

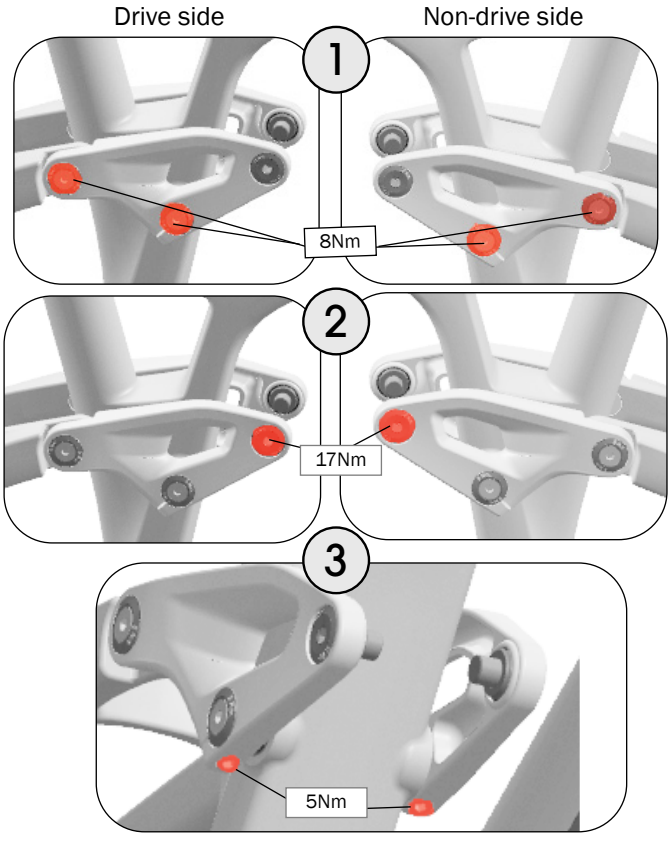

1. Screws — W5270150
2. Concave washers — W5270027
3. Bearings — W5256341
4. Hat style washers — W5270030
5. Mino link nuts — W5270028
6. Frame spacers — W290057
7. Rocker pivot axle — W5271369
8. Rocker link pinch bolts — W5256244
9. Seatstay — 40468
   Search trekbikes.com to find the color-matched part for your bike.

Tools

- Bearing press
- 4mm hex wrench
- Torque wrench with 4mm hex bit
- Grease
- Threadlocker

Main pivot and chainstay

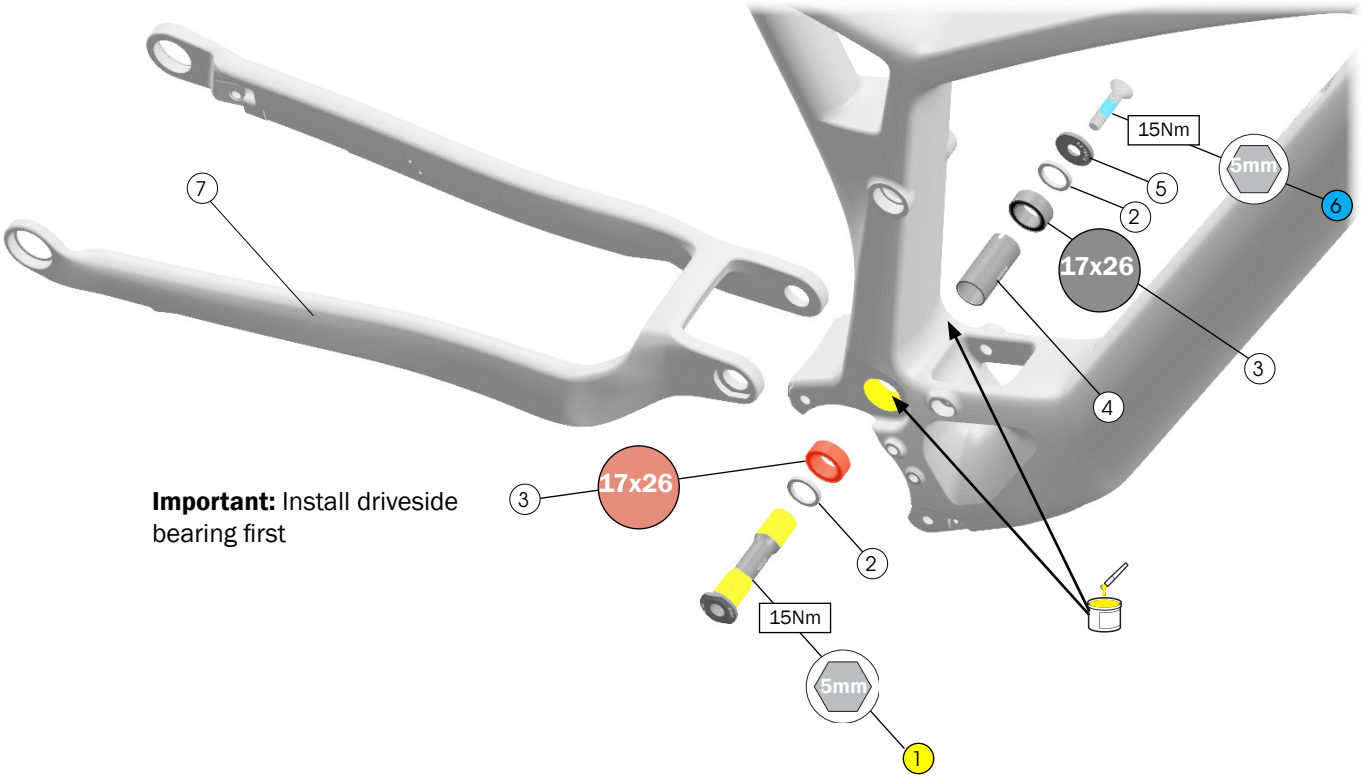

Important: Install driveside bearing first

1. Main pivot axle — W5270022
2. Frame spacers — W440921
3. Bearings — W5256338
4. Main pivot sleeve — W600642
5. Concave washers — W5270024
6. Screws — W5270149
7. Chainstay — 40466
   Search trekbikes.com to find the color-matched part for your bike.

Tools

- Bearing press
- 5 mm hex tool
- Torque wrench with 5mm hex bit
- Grease
- Threadlocker

Rear shock hardware and dimensions

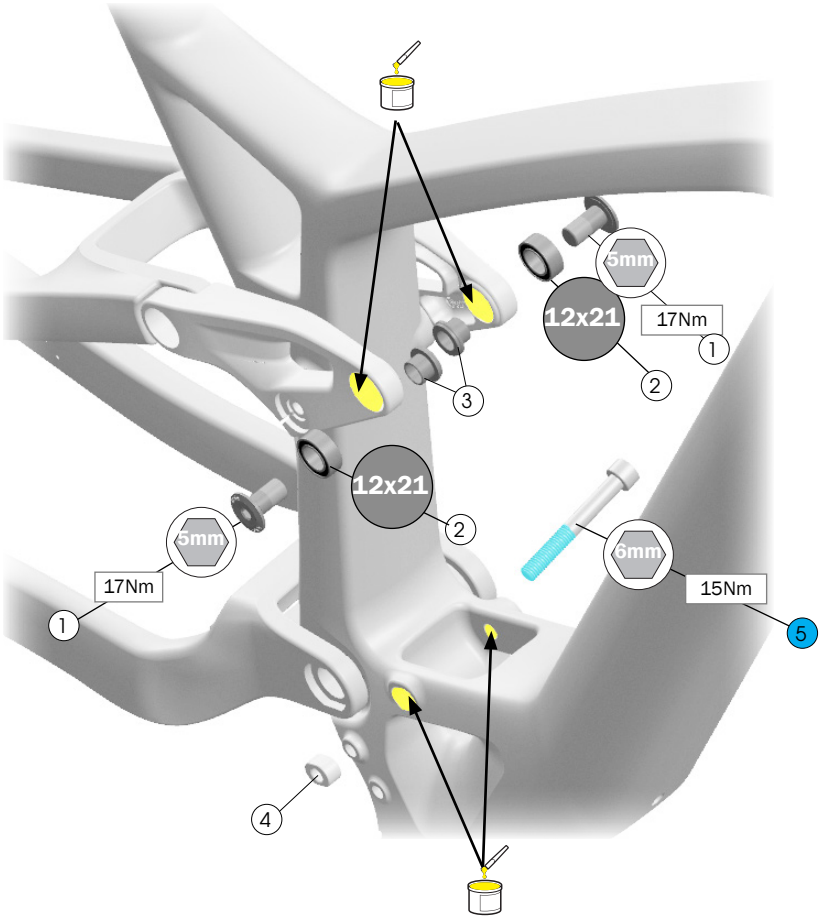



Shock Dimensions
Eye-to Eye-length: 205mm
Stroke length: 60mm
Upper width: 54mm x 10mm
Lower width: 40mm x 8mm

1. Upper bolts, M10 x 1 x 19mm — W5270031
2. Bearings — W5256341
3. Hat-style washers — W5270030
4. Nut — W286347
5. Lower bolt, M8 x 1 x 60mm

— 5272748

Tools

- Bearing press
- 6mm hex wrenches
- Torque wrench with 6mm bit
- Grease
- Threadlocker

Setup

Recommended sag: 30%, 18mm

Refer to the suspension setup card included with your bike or the suspension calculator at trekbikes.com/suspension-calculator.

For recommended rebound settings refer to the suspension calculator at trekbikes.com/suspension-calculator.

Adjust the geometry

Flip the Mino link to change the bike's geometry to fit your riding style or the terrain.

Steeper head tube angle

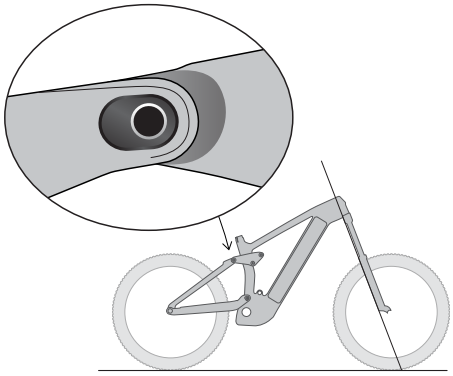

Mino link in the high position

- Pulls in the front fork for quicker steering
- Raises the bottom bracket for improved climbing

Slacker head tube angle

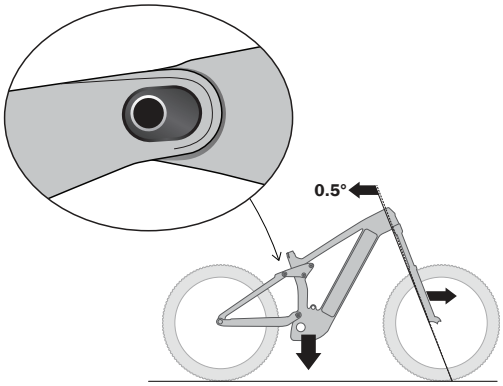

Mino link in the low position

- Pushes the head tube angle back 0.5° and pushes out the front fork for slower steering that is more stable at high speed
- Lowers the bottom bracket up to 9mm for more stability

Tools

- 4mm hex tool
- Torque wrench with 4mm hex bit

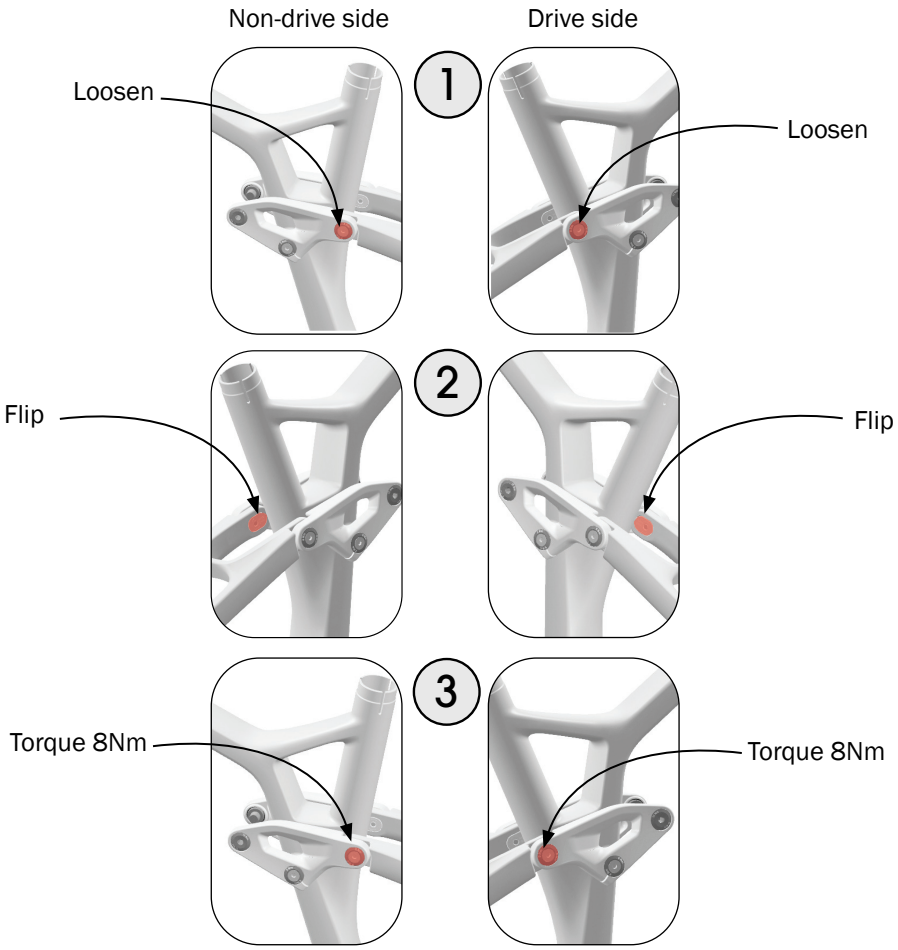

Brake, derailleur, and dropper post routing

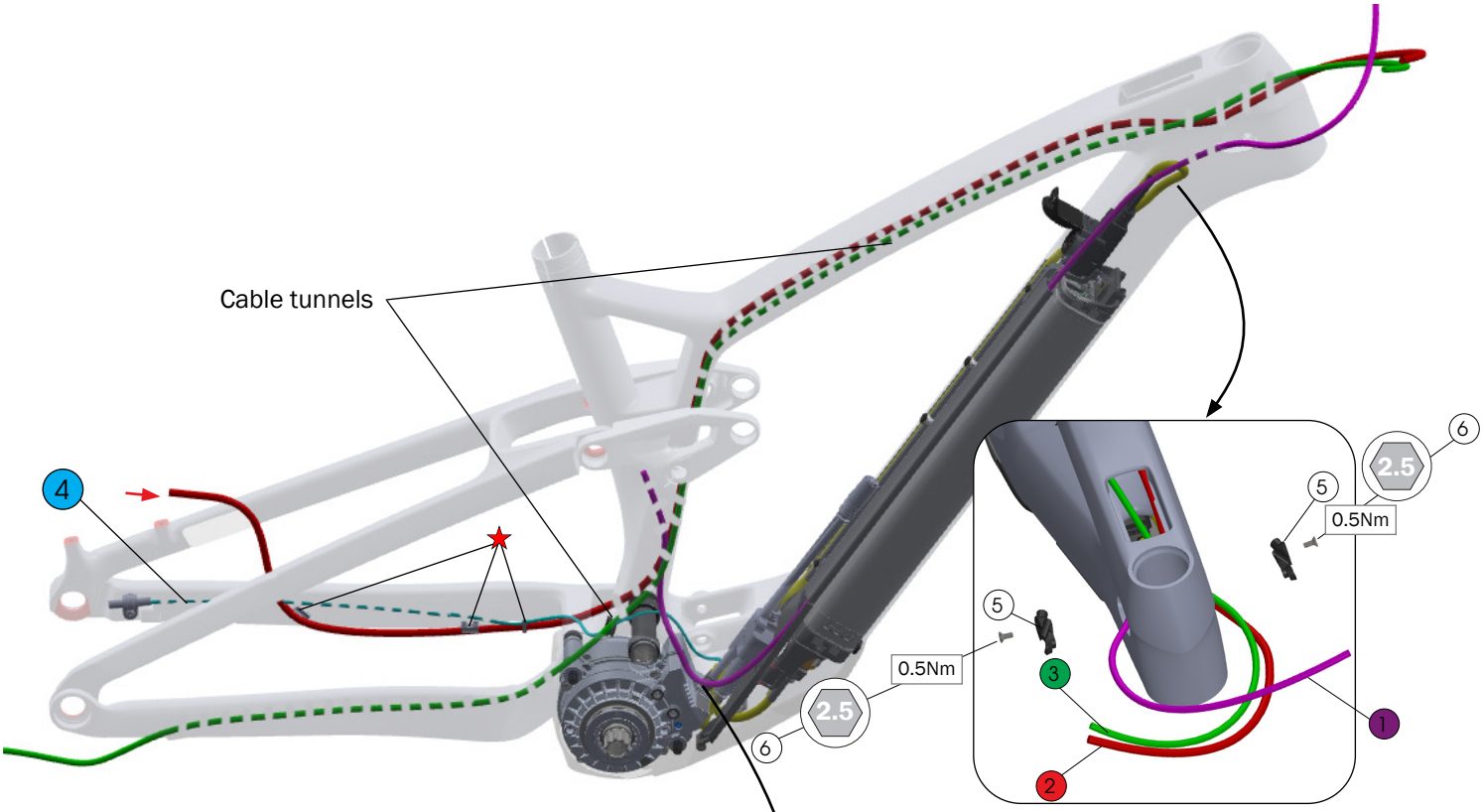

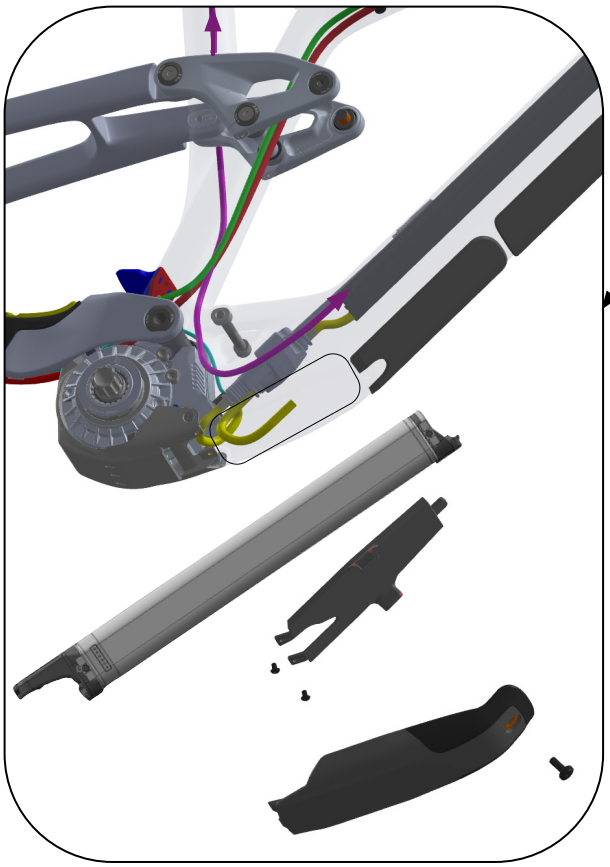

Dropper post cable routing
(See pages 9 and 11 for part information)

1 Dropper post cable

1. Remove the battery cover, access cover and battery (See Remove and install the battery on page 19.
2. Route the cable from the bottom up through the seat post and up through the cable tray in the down tube.

2 Brake hose

1. Remove the display from the top tube for easier access.
2. Route the brake hose back to front.

3 Derailleur cable housing

1. Remove the display from the top tube for easier access.
2. Route the cable housing back to front.

4 Speed sensor cable

5 Exit guide — W519232

6 Bolts — W532763

★ Zip tie

Guards and water bottle mounts

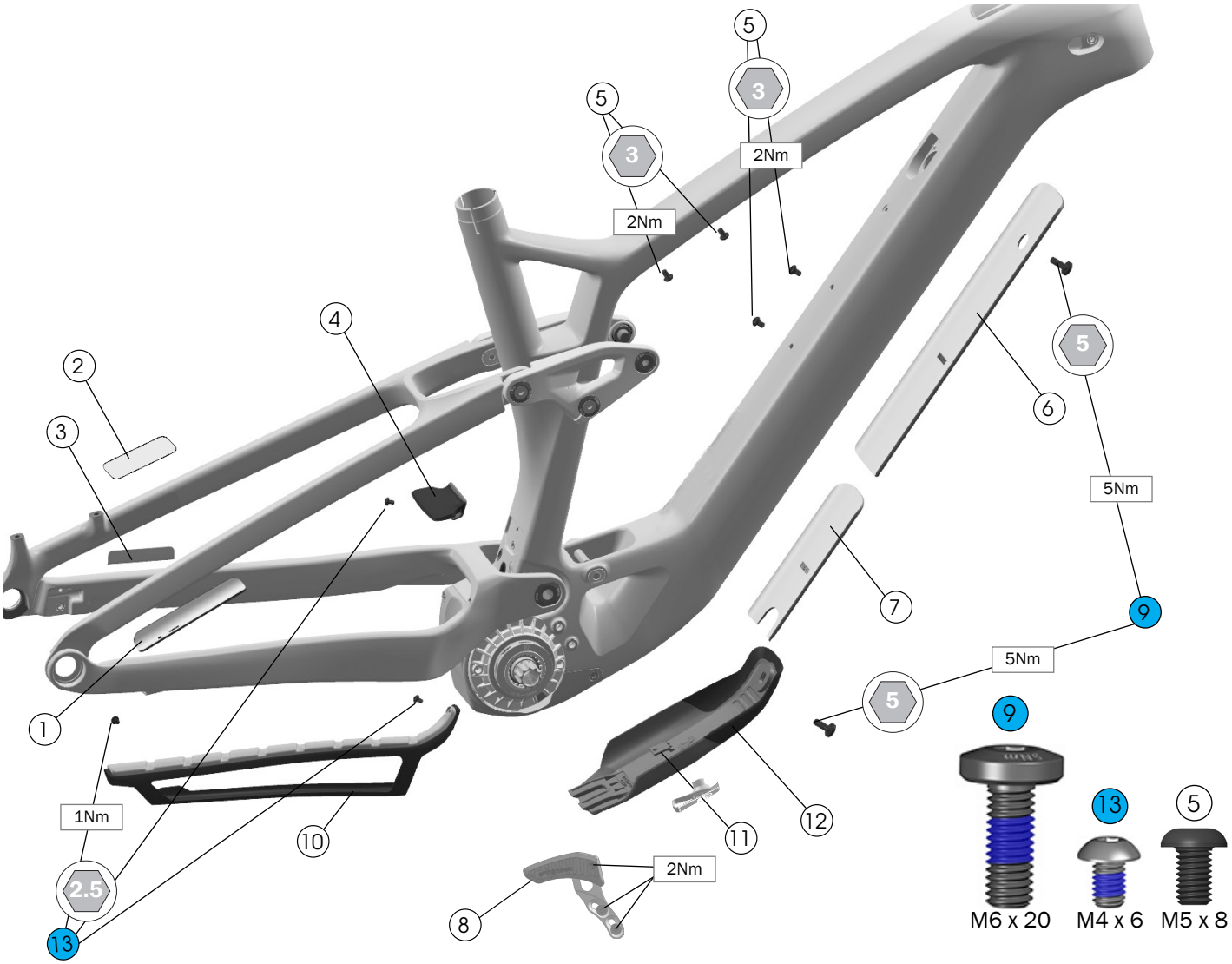

1. Seatstay adhesive guard — W5271371
2. Brake hose adhesive guard — W326986
3. Rotor guard — W580881
   1. To improve adhesion, use sandpaper to roughen the backside of the guard and the area of the frame where epoxy will be applied.
   2. Attach the guard with a two-part epoxy.
   3. Allow the guard and epoxy to cure for 24 hours.
4. Main pivot mud flap — W5275234
5. Accessory mount screws — W598484
6. Shuttle adhesive guard (optional) — W5280162
7. Down tube adhesive guard — W5273589
8. Chain guard with bolts — W5276728
9. Battery mount bolt — W5275266
10. Chainstay guard — W5271370
11. Clip nut (Use when battery is not installed) — W5284890
12. Battery cover — W5271937
13. Button head screws — W575056

Adhesive Guards 1 2 7 8

Use isopropyl alcohol to clean the frame surface where the guard attaches. Wait for the alcohol to dry before applying the guard.

Notice: Do not clean the entire frame with isopropyl alcohol. Isopropyl alcohol could damage the paint.

Charge port cover

Tip: Not sure if you have a T8 Torx wrench? Before you buy a new one check your SRAM bleed kit to see if one is included with the kit.

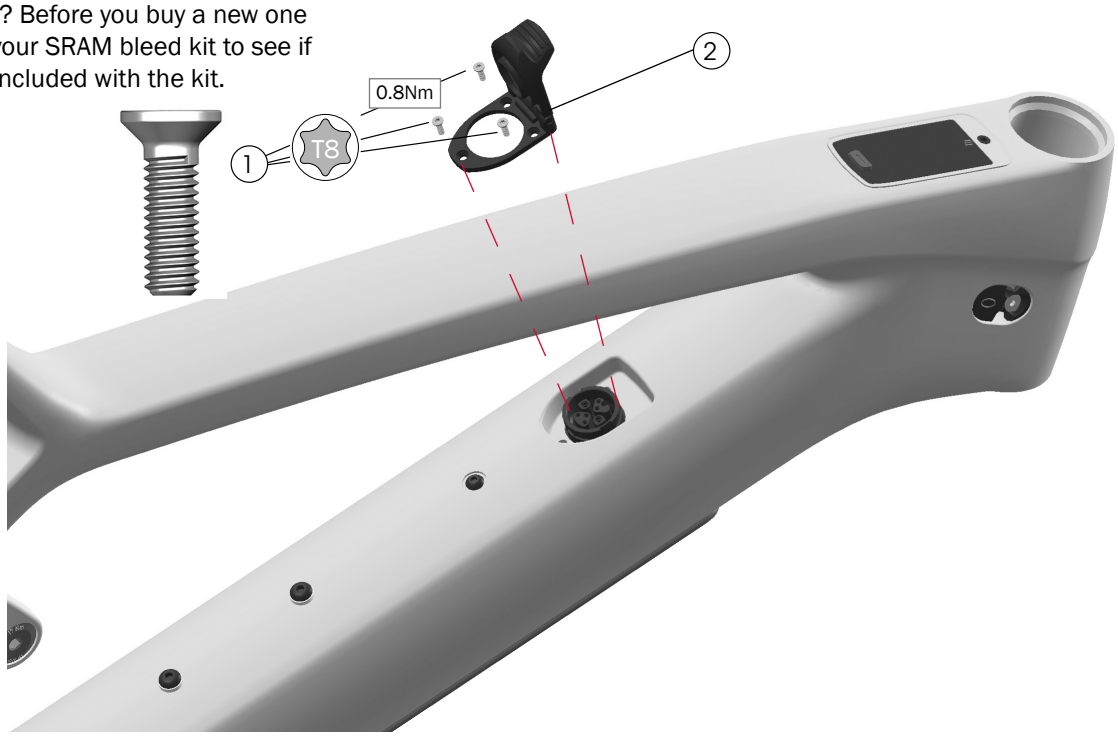

1. Bolts, M2.5x8mm
2. Charge port cover

— 5289578

Tools

- T8 Torx wrench
- 5mm hex wrench

Replacement tip

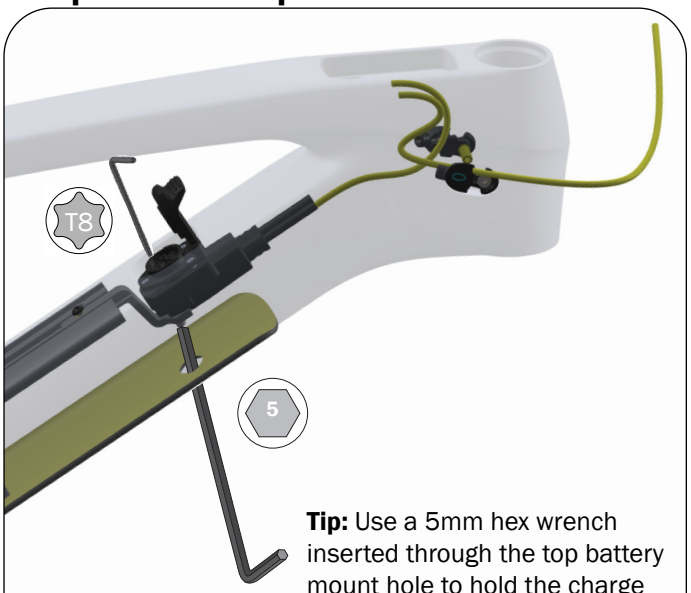

Tip: Use a 5mm hex wrench inserted through the top battery mount hole to hold the charge port into place while tightening the screws.

Remote, display, and Smart Box

For detailed service instructions:

Refer to the TQ service manuals found on tq-ebike.com/en/support/manuals.

Bikes without a TQ Smart Box

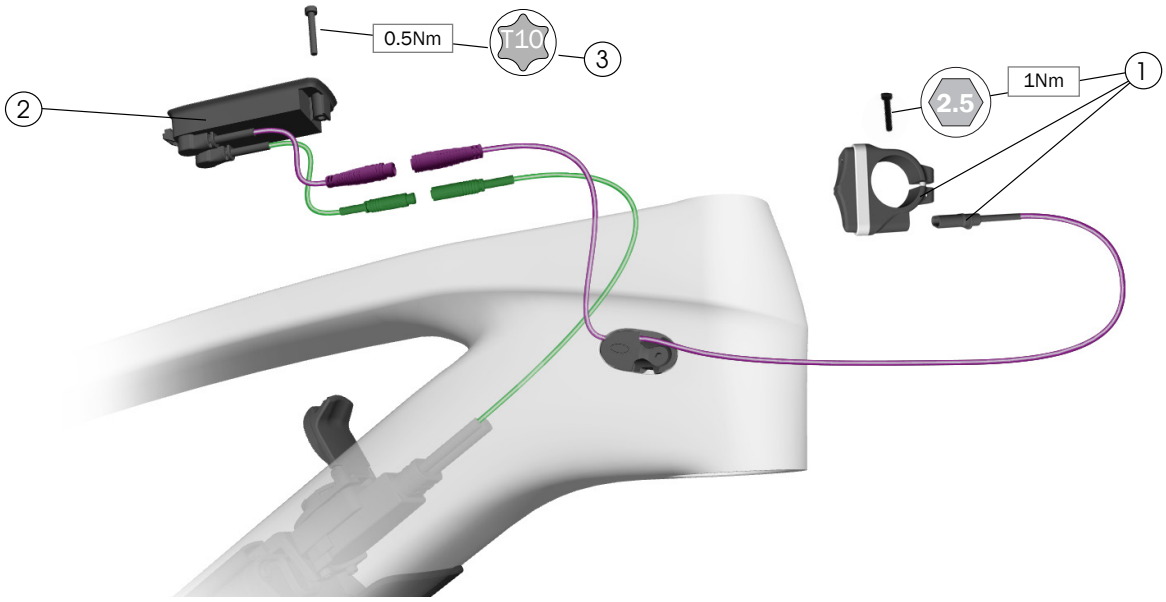

Bikes with a TQ Smart Box

AXS-equipped bikes include the TQ Smart Box. It has connections for front light, rear light, aux 12, and electronic shifting.

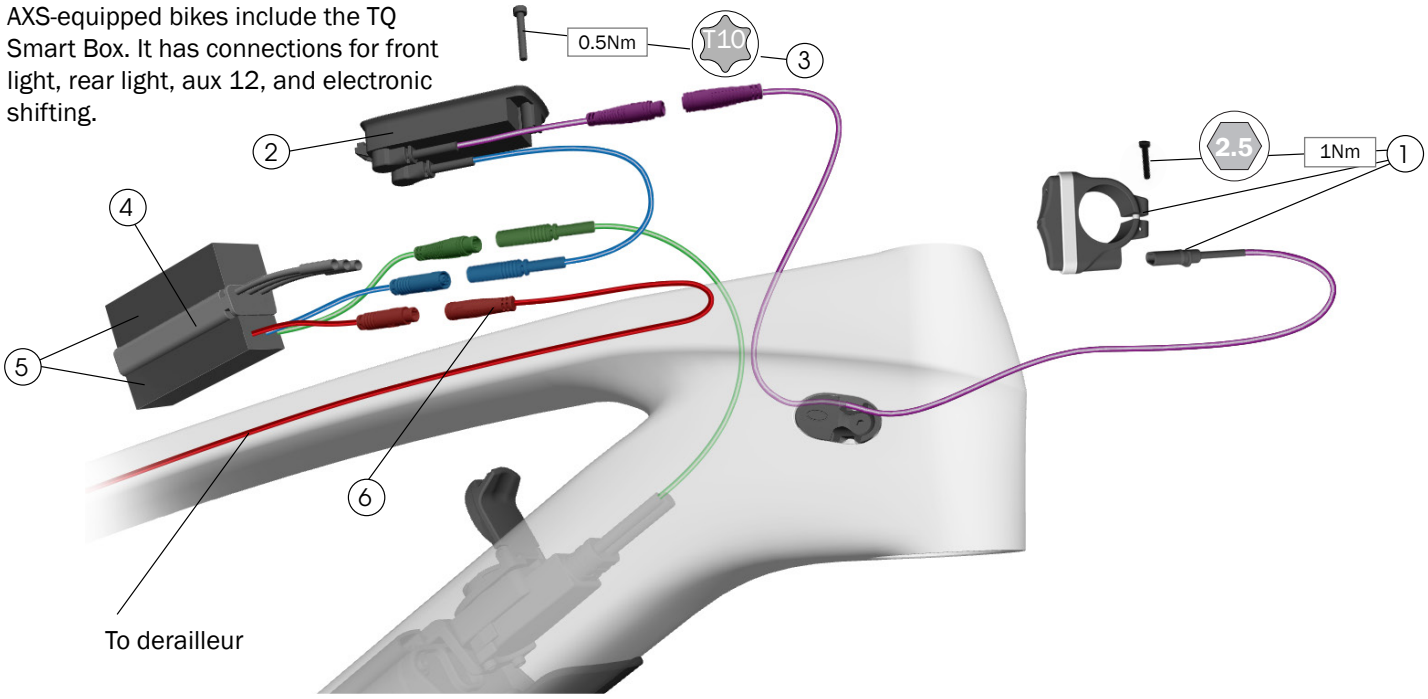

1. Remote, including screw — 5289561
2. Display — 5289562
3. Socket head bolt — 5305631

— 5289562

4. Smart box — 5289564
5. Foam blocks, set of two — 5305634
6. AXS derailleur cable — 5289566

Wiring harness and cable tray organizer

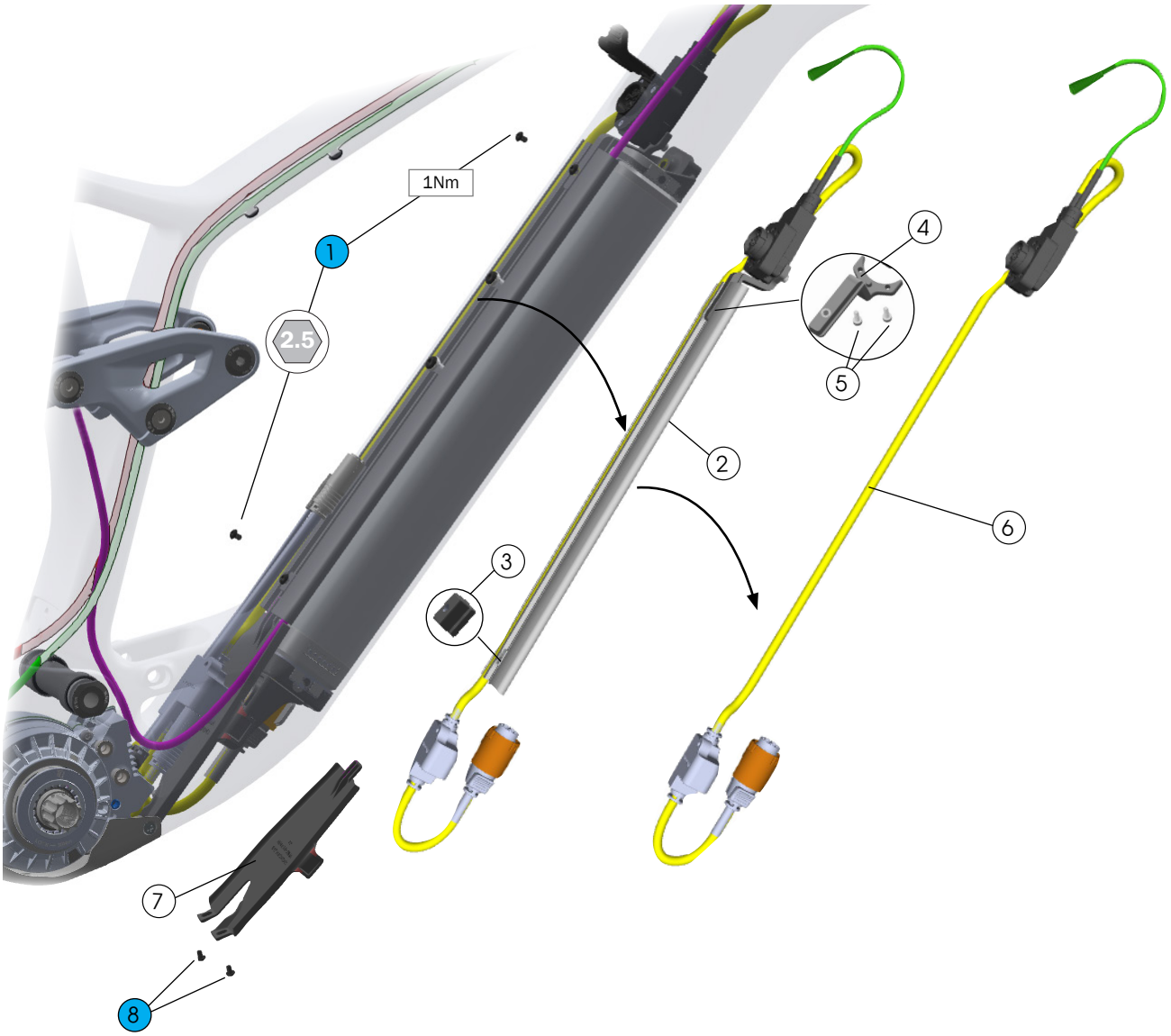

1. Button head cap screws — W575056
2. Cable tray — W5274993
3. Sliding T nut — W5283261
4. Charge port holder — W5274996
5. Screws — W545633
6. Wiring harness — 5289573
7. Access cover — W5271943
8. Screws — W575056

Cable tray replacement tip

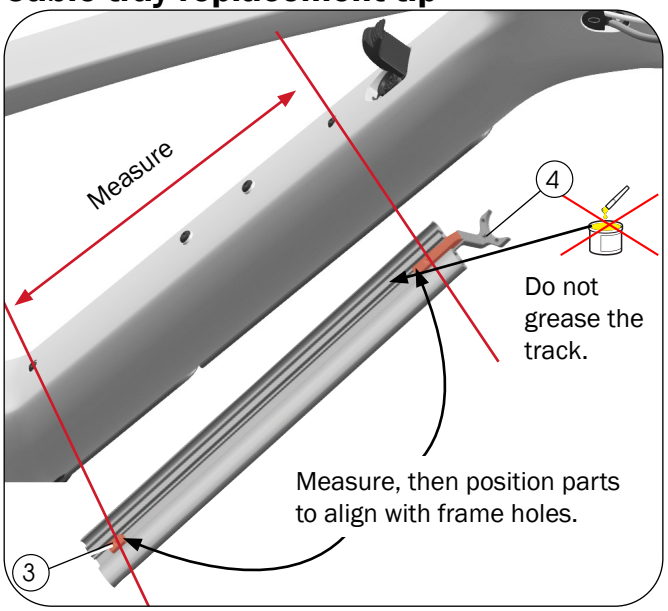

Drive unit

For detailed service instructions:

Refer to the TQ service manuals found on tq-ebike.com/en/support/manuals.

Notice: Before assembling the chainring (spider) or lock-ring, place the included protective sleeve over the bottom bracket spindle. Failure to use the sleeve could damage the seal on the lockring and allow water to damage the motor. Remove after assembly.

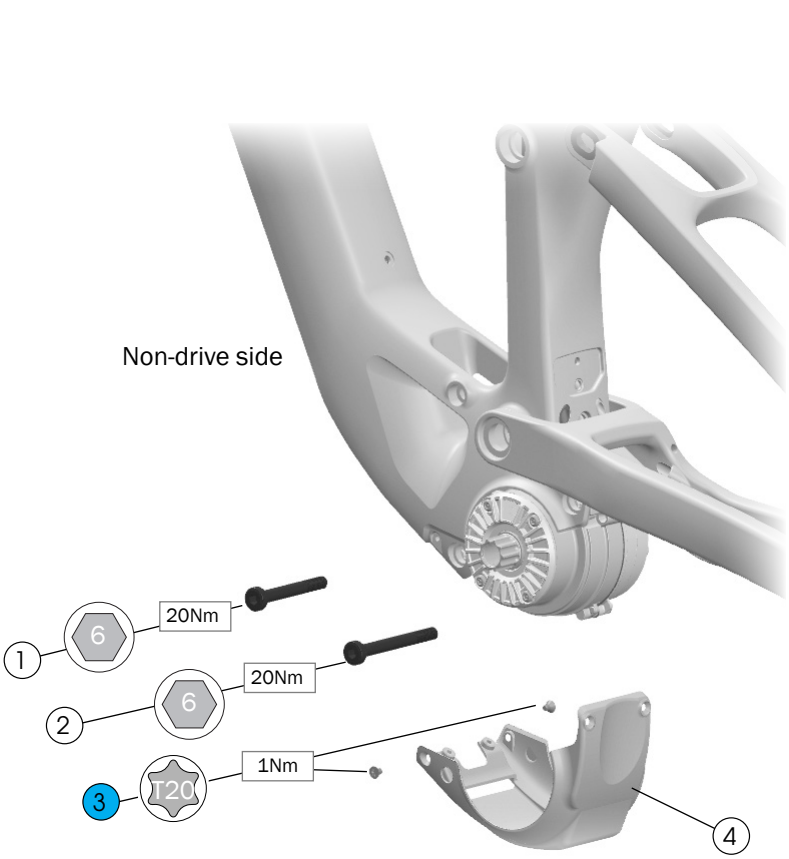

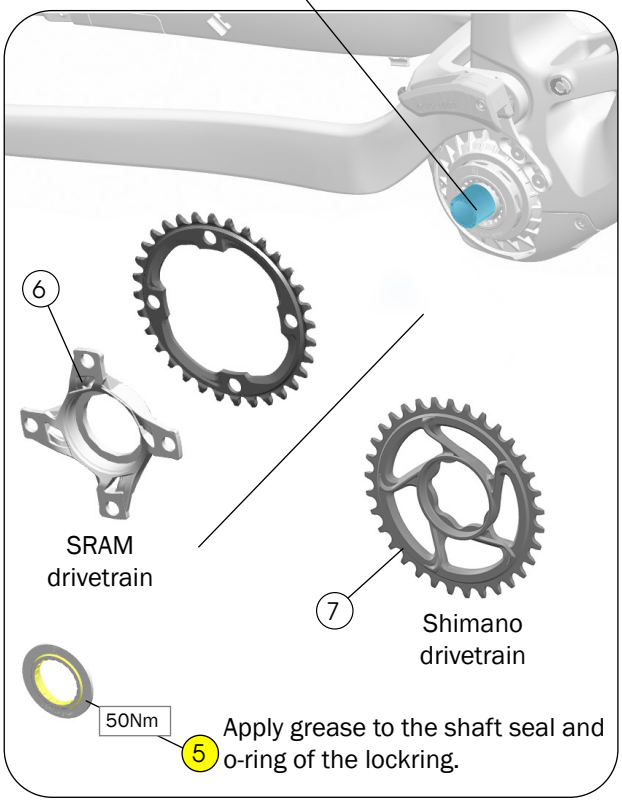

Drive side

Tools

- 6mm hex wrench
- T20 Torx wrench
- Torque wrench with 6mm bit
- BB-UN55 bottom bracket tool — part number 536183

1 Front motor bolt, 73mm
2 Rear motor bolt, 62mm
— 5289570

3 Screws, 4-pack — 5269023

4 Motor guard — W5271938

5 Lockring — 5289572

6 FSA spider for SRAM spec models — W5275013

7 e*Thirteen chainring for Shimano Spec models — W5272388

Notice: To disconnect the speed sensor from the drive unit, hold each connector and gently pull them apart. Do not pull the cable. Pulling the cable could damage the speed sensor.Notice: Do not carry the drive unit by the cables because this could damage the drive unit.

Adjust the compensation screws

Before mounting a replacement drive unit, adjust the compensation screws (tighten or loosen) to match the frame as shown

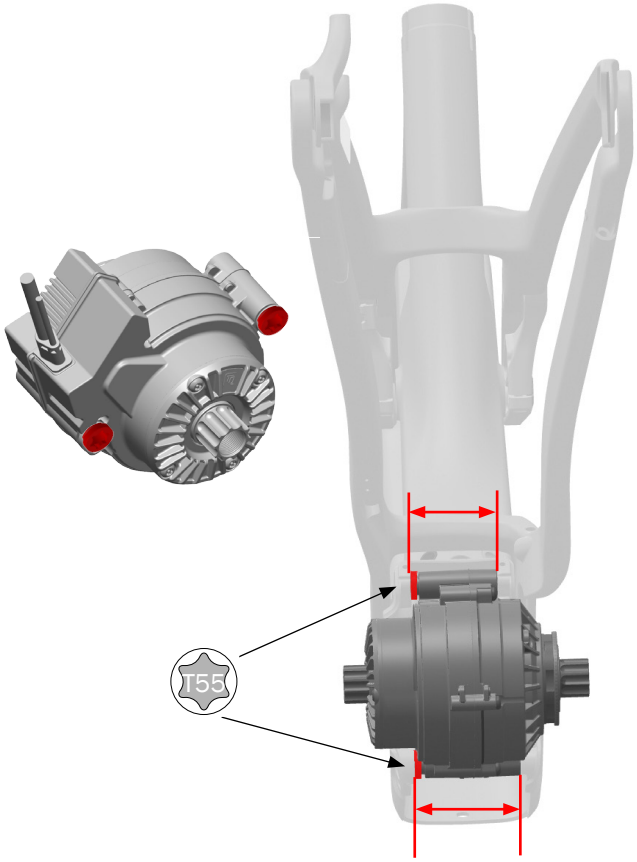

NOTE: Only adjust the compensation screws if you are replacing the drive unit.

Re-installing the cranks

Note: a CWP-7 Crank Puller be helpful to remove some types of crank arms.

The TQ system is designed for cranks to be installed in the UP position and in alignment with the notches on spindle. Installing the cranks in a different position will cause the drive unit to run rough for a few hundred meters until the system re-learns the position of the cranks.

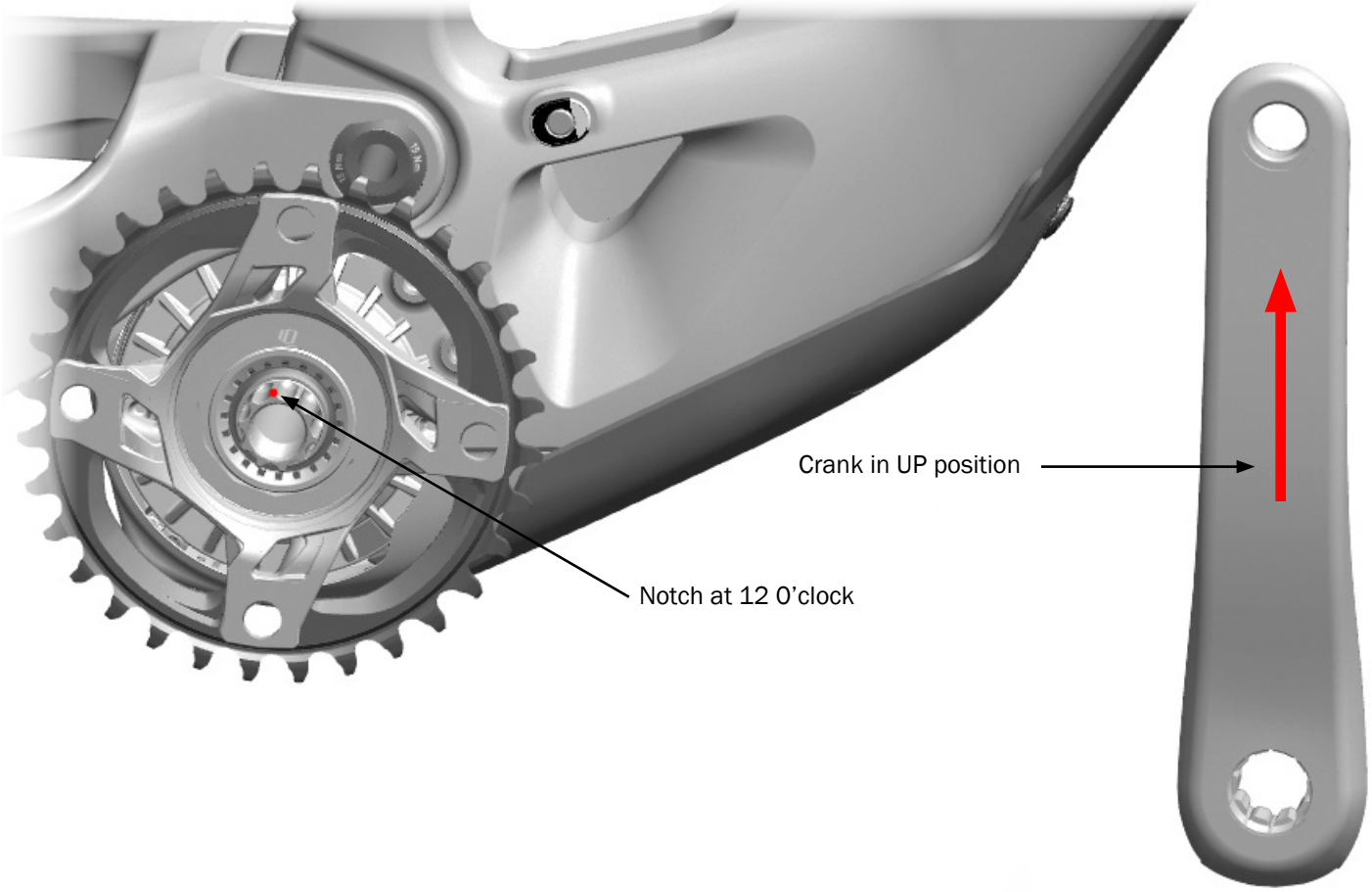

1. Locate the notch on the spindle. There are notches on the driveside and non-driveside.
2. Rotate the spindle until one notch is at the 12 o'clock position.
3. Install the crank in the up position.

Speed sensor

For detailed service instructions:

Refer to the TQ service manuals found on tq-ebike.com/en/support/manuals.

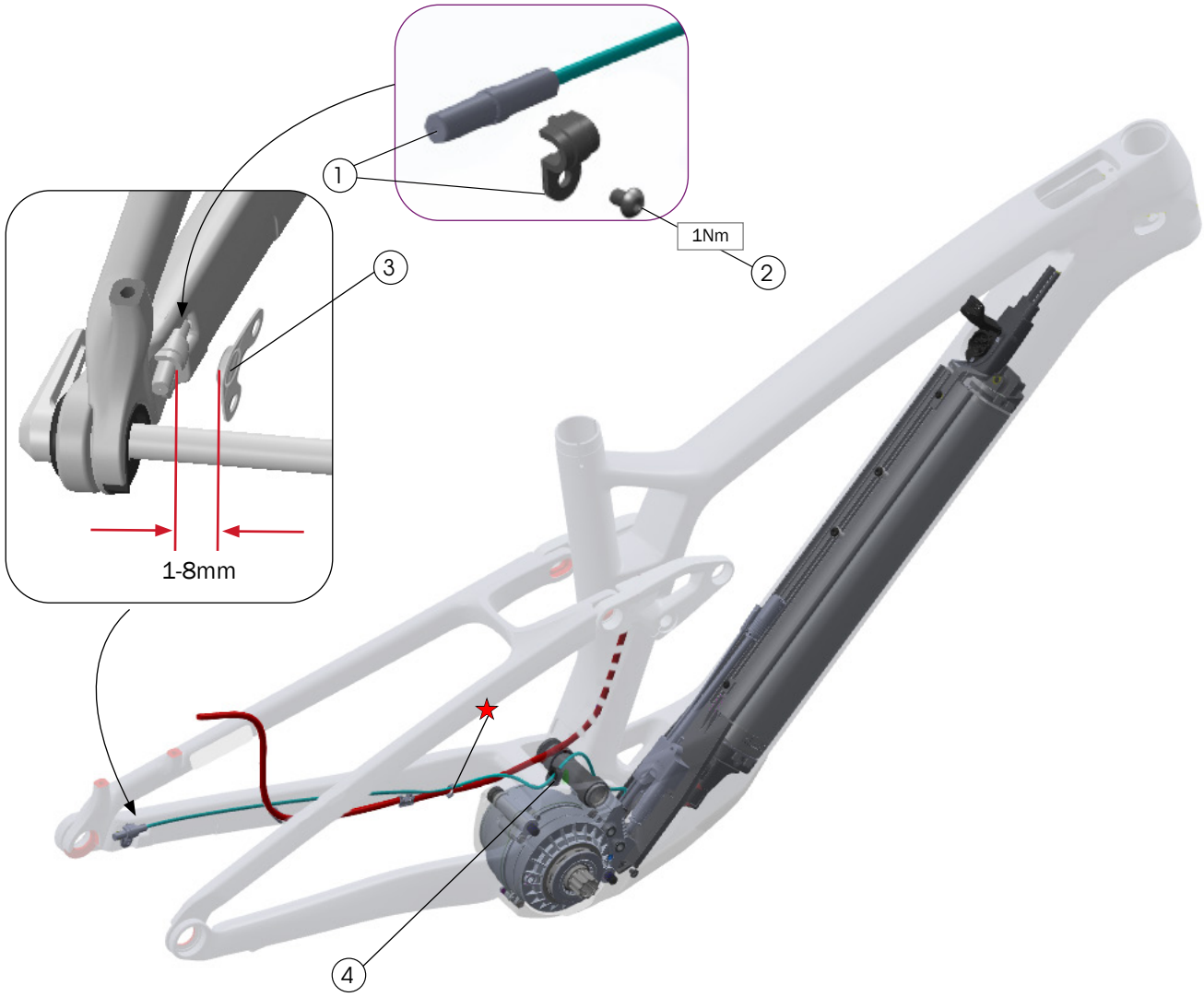

1. Speed sensor cable and clip — 5289567
2. Bolt, M4 x 6mm — W575056
3. Magnet — 5289568
4. Cable grommet — W5255861

Notice: To disconnect the speed sensor from the drive unit, hold each connector and gently pull them apart. Do not pull the cable. Pulling the cable could damage the speed sensor.

Replacement tip

1. To aid in removing the cable, use an internal routing tool to chase the cable as you remove it.
2. Attach a new wire and reverse the process.

Battery

For detailed service instructions:

Refer the TQ service manuals found on tq-ebike.com/en/support/manuals.

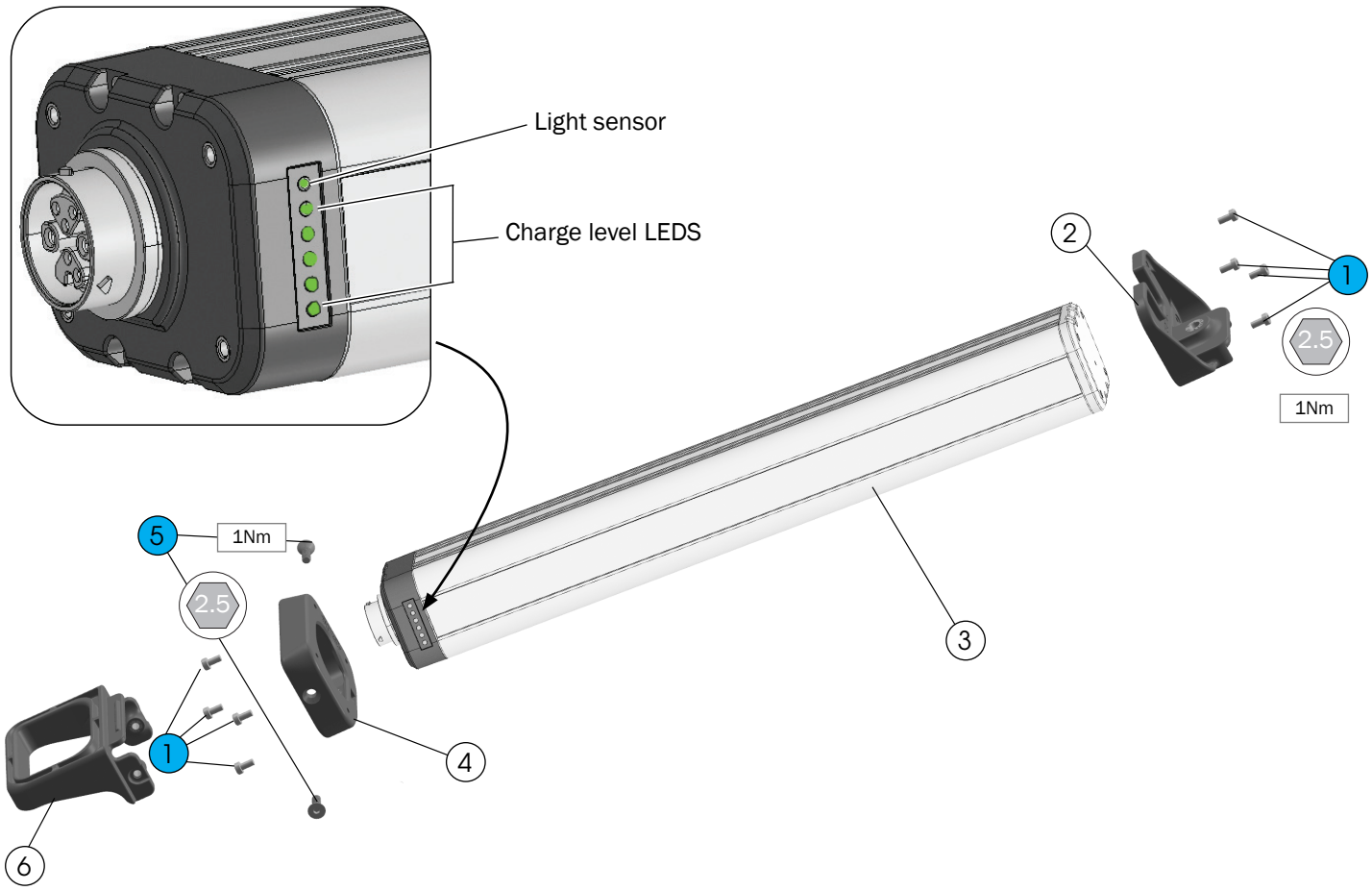

1. Bolts — W581747
2. Upper battery end cap — W5298492
3. Battery — 5289554
4. Lower battery end cap — W5273187
5. Bolts (M5 x 12 mm)
6. Battery pull handle — W5273188

Tools

- 2.5mm hex tool

Assembly

Notice: Assemble the handle in the orientation shown above, and with the battery positioned so the LEDs will be on the drive side. The battery will not install properly if it is assembled incorrectly.

Charge level LEDs

The LEDs on the battery indicate the charge level. To refresh the status, place a finger over the LEDs for a few seconds, then uncover. Each LED represents 20% of the battery charge.

Remove and install the battery

Remove the battery

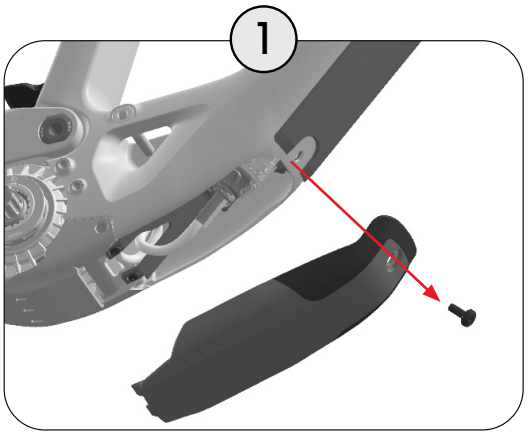

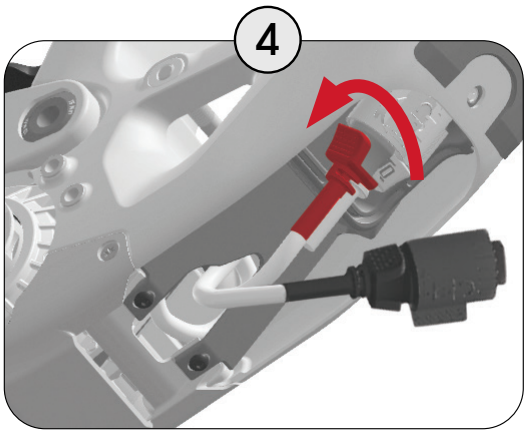

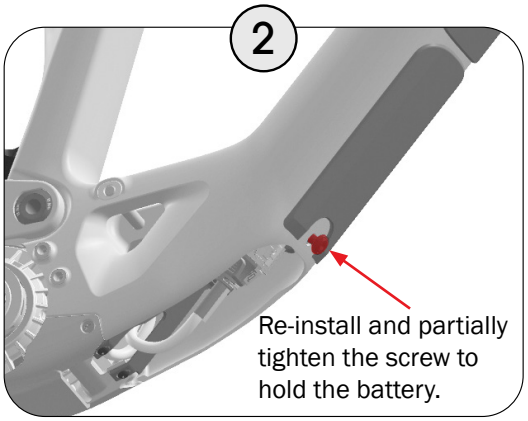

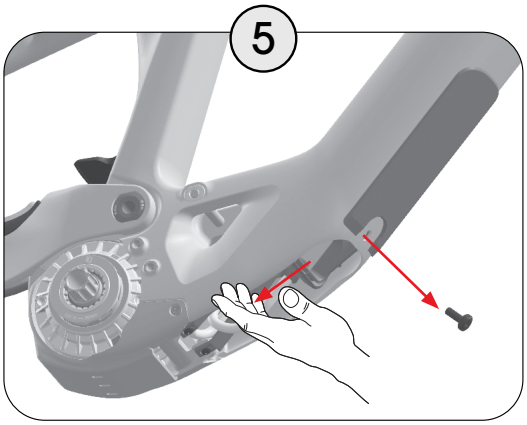

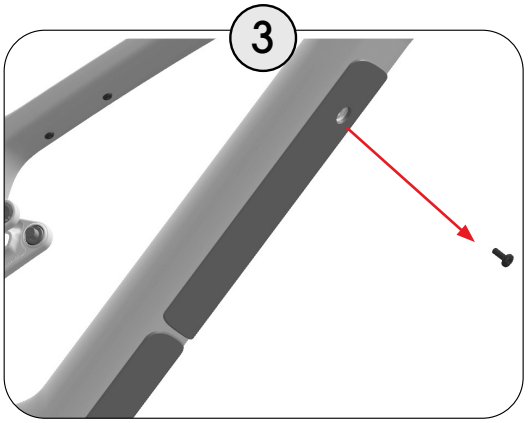

NOTICE: Guide the battery out of the frame. When the last battery mount screw is removed, the battery will slide out of the frame. To prevent the battery from falling, place one hand under the battery to support it while removing the last screw.

Install the battery

1. Insert the battery.
2. Install the top mounting screw to hold the battery in place.
3. Plug in the battery.
4. Rotate the battery lock to the closed position.
5. Gently tug the battery handle to verify the battery is locked into place.
6. Install the battery cover.
7. Torque the top and bottom mountings screws to 5Nm.

Ride the bike without the battery

The battery helps hold the motor cover in place. To ride the bike without the battery, you must install the clip nut to hold the motor cover in place. The clip nut is stored on the inside of the batter cover.

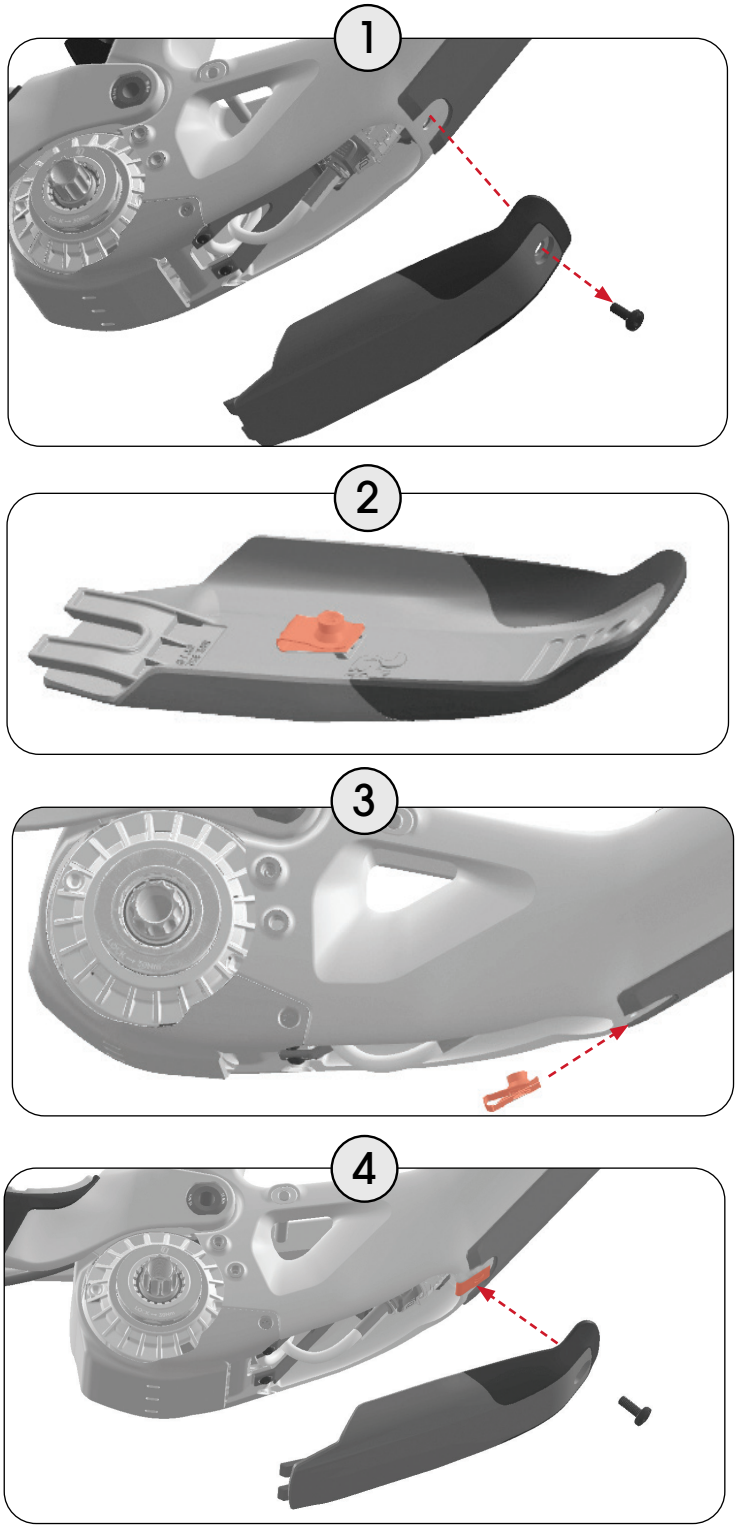

Connect lights to the TQ Smart Box

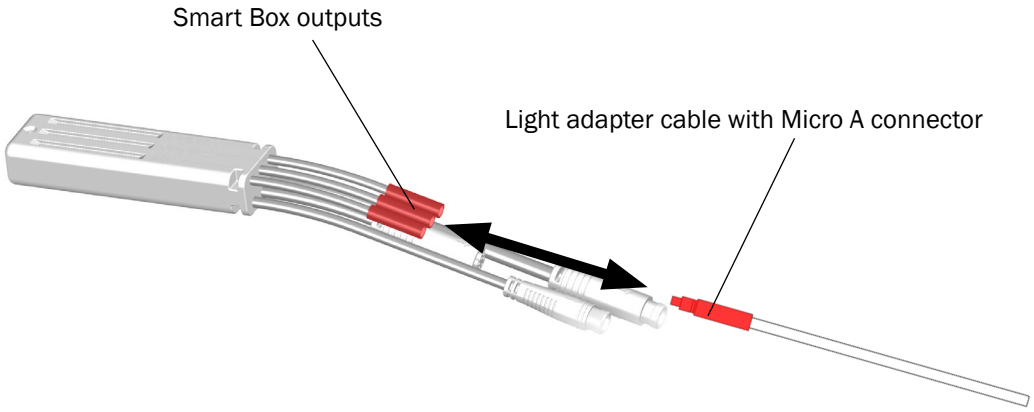

Lights can be connected to the TQ smart box and powered by the bike battery. The Smartbox power outputs must be activated via the Dealer Service Tool.

- **Maximum power (front and rear light combined):** 20W at 12V.
- **List of compatible lights:** refer to TQ's FAQ:
  - **English:** tq-ebike.com/en/support/faq
  - **German:** tq-ebike.com/de/support/faq
- **Required:**
  - A light adapter cable with a Micro A connector.
  - The Dealer Service Tool (shop use only) to activate the power output on the Smart Box.

Specifications

Chainline (1x only)

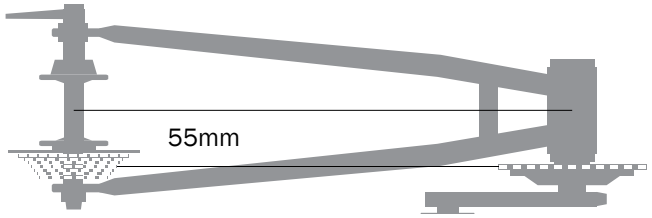

Chainring (1x only)

Minimum	Maximum
30T	34T Round

Oval rings of any size are not recommended as they will affect motor performance.

Rear brake mount

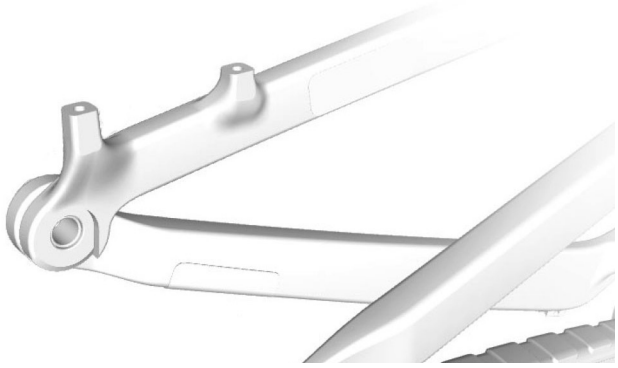

Minimum	Maximum
180mm, direct mount	Adaptable to 203mm

Maximum tire size

29" x 2.5"

Notice: Measurements of actual tires may vary. Always verify there is sufficient clearance between the tire and the frame. Improper tire size could damage the bicycle frame. Trek recommends 6mm clearance above and on the sides of the tire.

Seat post

WARNING

Always follow the seatpost manufacturer's minimum insertion recommendation. Failure to follow the recommendation could cause damage to the seatpost and result in injury to the rider.

Minimum insertion 75mm

Maximum insertion

Small 190mm

Medium 225mm

Large 250mm

Extra Large 285mm

Seat tube inside diameter 34.9mm

Seat tube post clamp outer diameter 39.7mm

Fork

WARNING

Exceeding the recommended maximum fork length could damage the bicycle and result in injury to the rider.

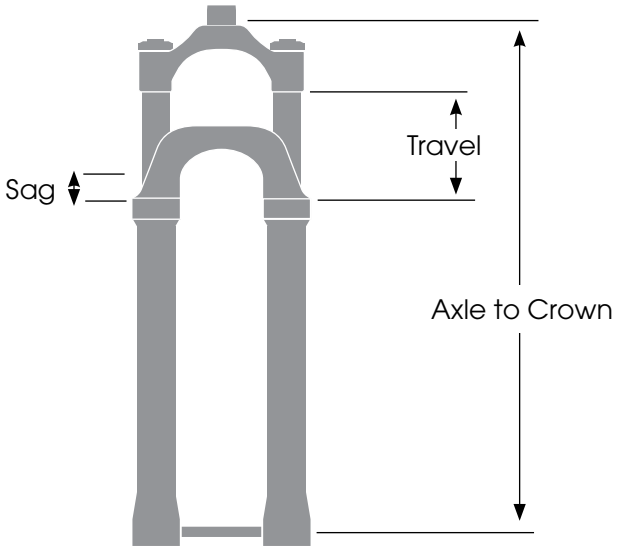

Frame/Size	Axle to Crown (mm)		Travel (mm)
S, M, ML, L, XL	Recommended	557	150
	Maximum	567	160

Recommended sag: Refer to the suspension setup card included with your bike or the suspension calculator at Trekbikes.com/suspension-calculator.