

2023 FUEL EX

SERVICE MANUAL

Contents


Safety


Active Braking Pivot (ABP)

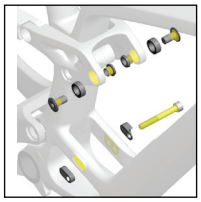
Rear shock hardware and dimensions

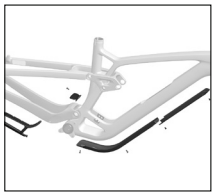
Routing with AXS shift


Adjust the geometry — headset angle


Adjustable headset

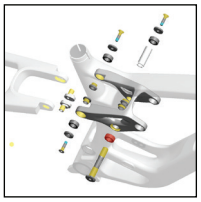
Rocker pivot and seatstay


Adjust the progression


Frame guards — aluminum frame

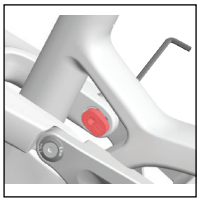
Adjust the geometry — seatstay mino link

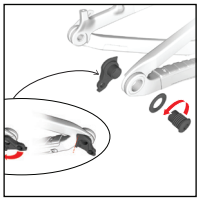
Derailleur hanger

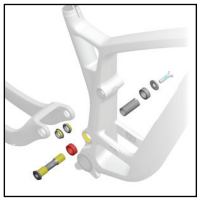
Main pivot and chainstay

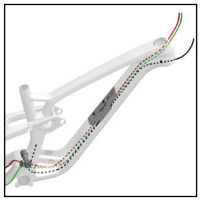
Routing with mechanical shift

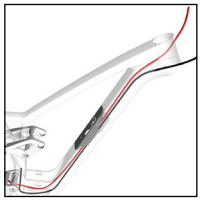
Routing with AXS shift

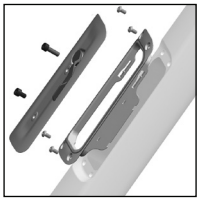
Down tube storage

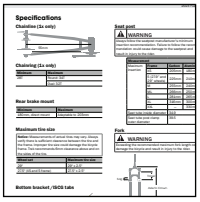
Specifications

Safety

WARNING

Properly tighten hardware

Always tighten hardware to the specified torque. Over-tightening hardware could deform or break the hardware or components. Under-tightening hardware could cause hardware or components to become loose. Either situation could damage the bicycle and result in injury to the rider.

WARNING

Reapply threadlocker

All reused-fasteners with pre-applied threadlocker must be cleaned with isopropyl alcohol and have new thread-locker applied before re-assembly. If threadlocker is not applied, the fasteners may loosen which could damage the bicycle and result in injury to the rider.

Legend

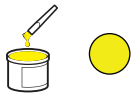
Apply grease


Do not apply grease

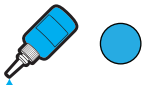
Apply threadlocker

Nm — Torque


Hex tool


Torx tool


Drift size


Zip tie

Copyright 2022 Trek Bicycle Corporation All Rights Reserved

Adjustable headset

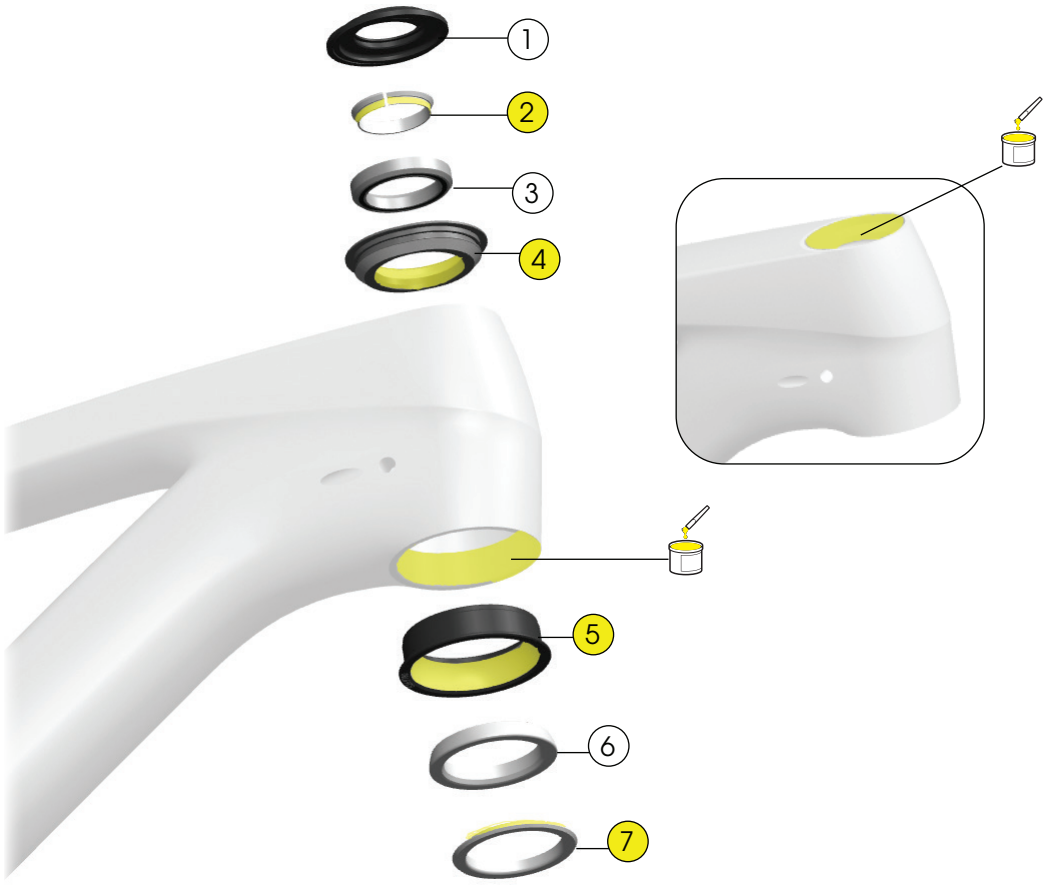

1. Upper bearing cover — W5275173
2. Compression ring — W532842
3. Upper bearing — W531676
4. Upper cup, 0° angle — 5304949
5. Press-fit lower cup, 0° angle — 5304949
6. Lower bearing — W532843
7. Crown race — W532844

— W5285212

Tools

- Headset press
- Grease

Derailleur hanger

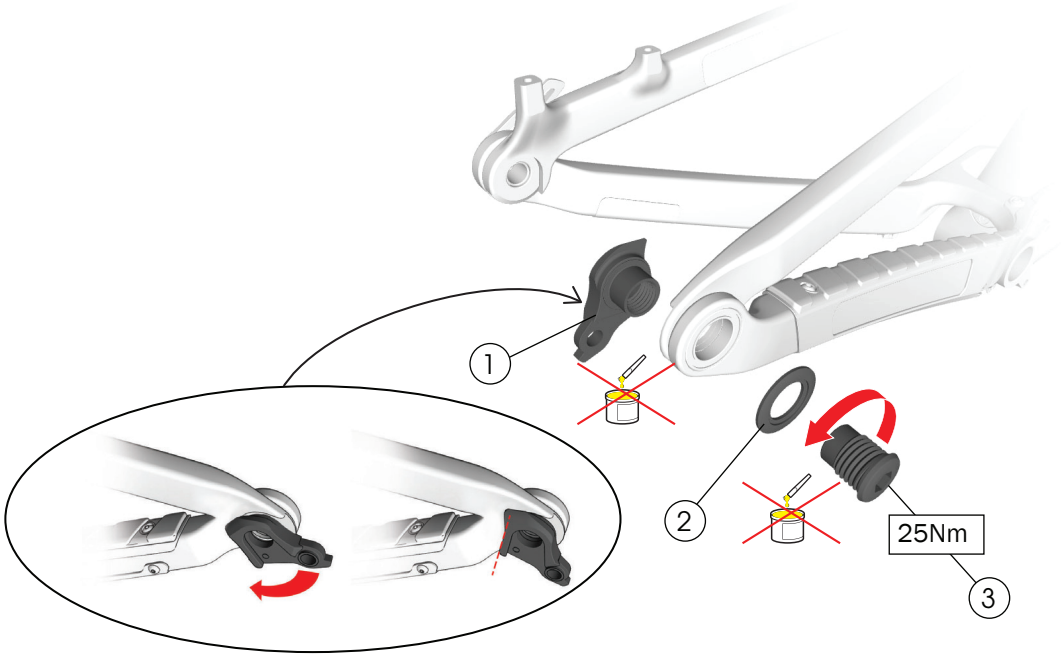

1	Derailleur hanger	— W5271425
2	Washer, 30mm	
3	Bolt	

Tools

- 8mm hex tool
- Torque wrench (left-hand thread) with 8mm hex bit

WARNING

Do not apply grease to the derailleur hanger or bolt.

This bicycle frame is designed to use a Universal Derailleur Hanger (UDH).

NOTICE: The thru axle must be compatible with a UDH and must be M12x1.0 with a 12.7mm thread.

NOTICE: The washer is frame-specific. Install only the washer size specified.

NOTICE: Do not over-tighten. Over-tightening the bolt could cause the hanger to break.

For additional information about the UDH, refer to the SRAM user manual at www.sram.com.

Active Braking Pivot (ABP)

Carbon frame

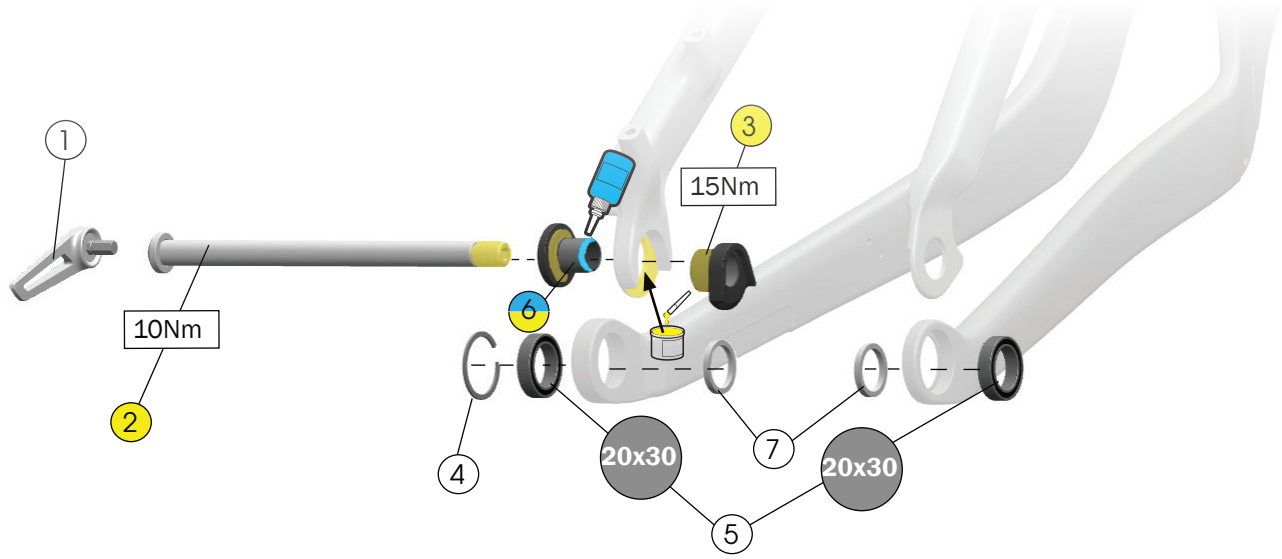

Aluminum frame

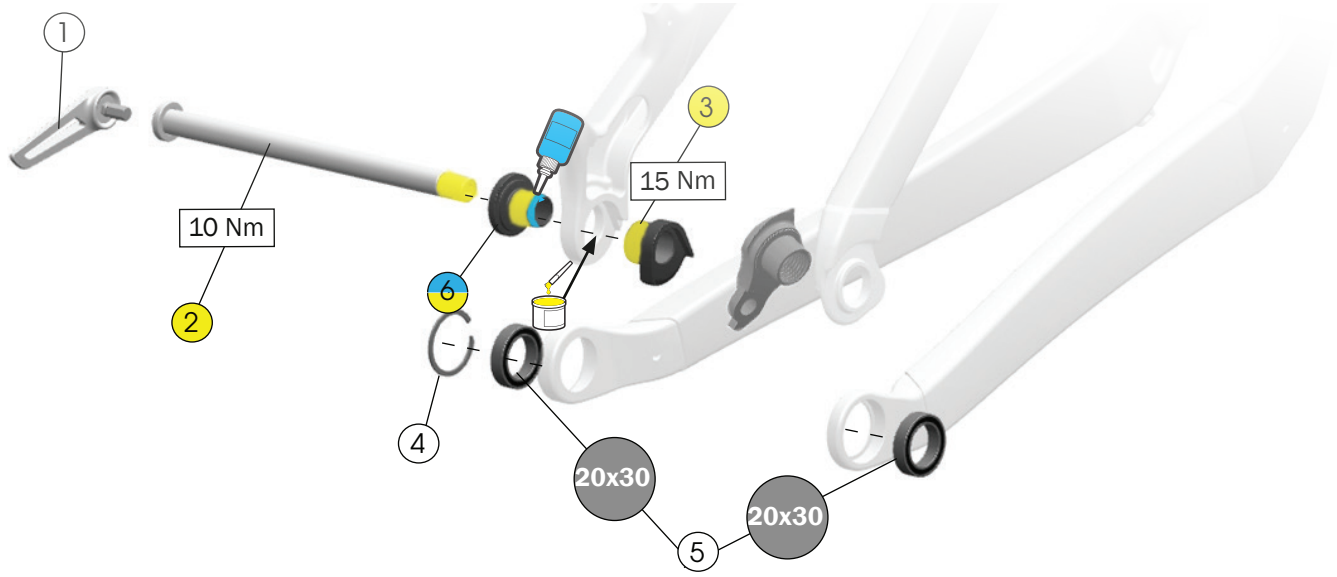

1. Switch lever — W573860
2. Thru axle — W583469
3. Non-driveside ABP dropout nut guide — W5269707
4. Retaining ring — W5251279
5. Bearings — W5256340
6. Non-driveside ABP bolt — W5251141
7. Spacers — W583422

— W5272776

Tools

- Bearing press
- Cassette lockring tool
- Grease
- Threadlocker

Rocker pivot and seatstay

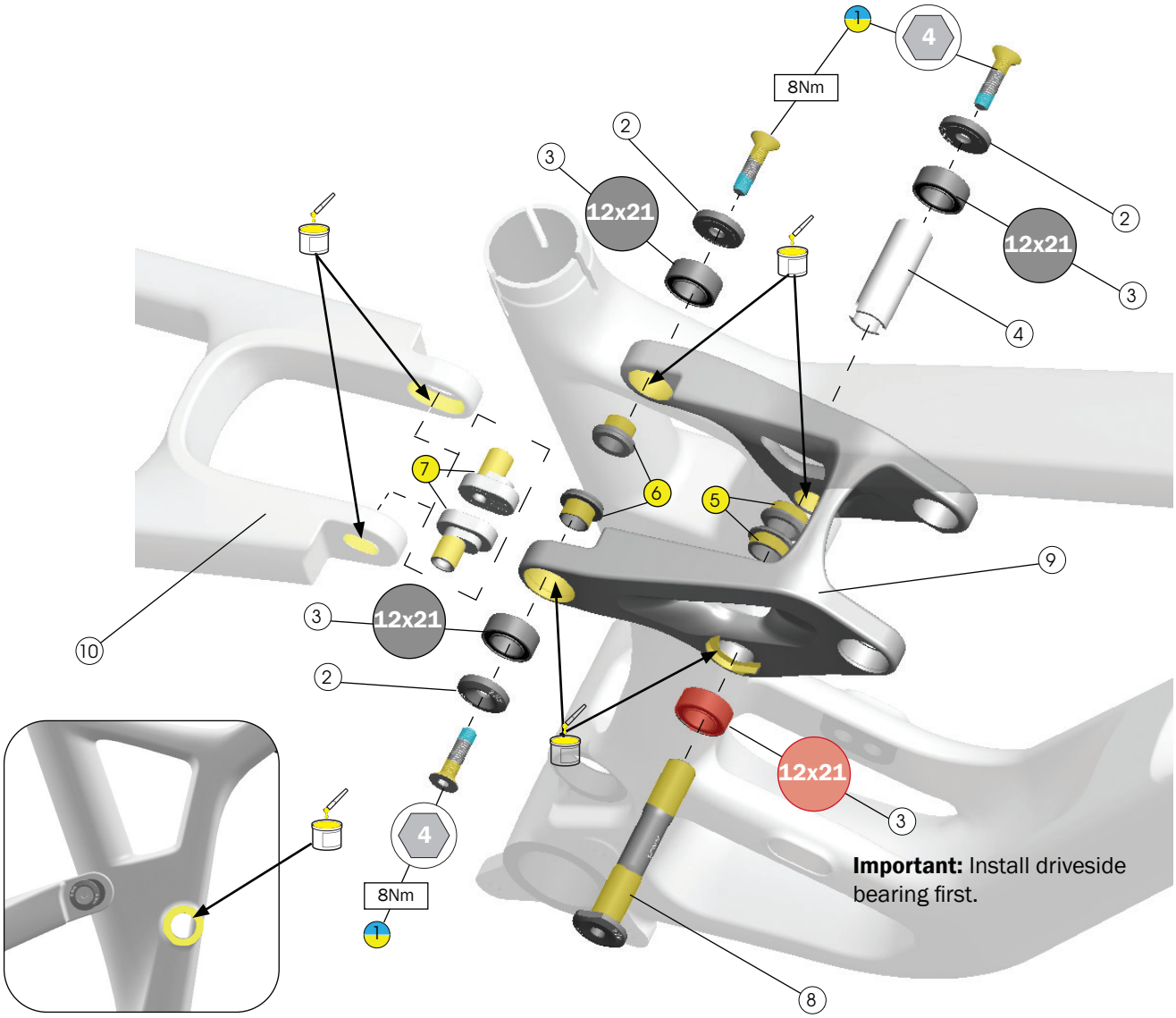

1. Screws — W5270150
2. Concave washers — W5270027
3. Bearings — W5256341
4. Seat tube pivot sleeve — W310155
5. Hat style washers (12mm) — W5270026
6. Hat style washers (10mm) — W5270030
7. Mino link nuts — W5270028
8. Rocker pivot axle — W5270025
9. Rocker pivot:
   Search for part number listed below on trekbikes.com to find the color-matched part for your bike.
   Carbon frame — 40783
   Aluminum frame — 40780
10. Seatstay:
    Search for part number listed below on trekbikes.com to find the color-matched part for your bike.
    Carbon frame — 40777
    Aluminum frame — 38553

Tools

- Bearing press
- 4mm hex wrench
- Torque wrench with 4mm hex bit
- Grease
- Threadlocker

Main pivot and chainstay

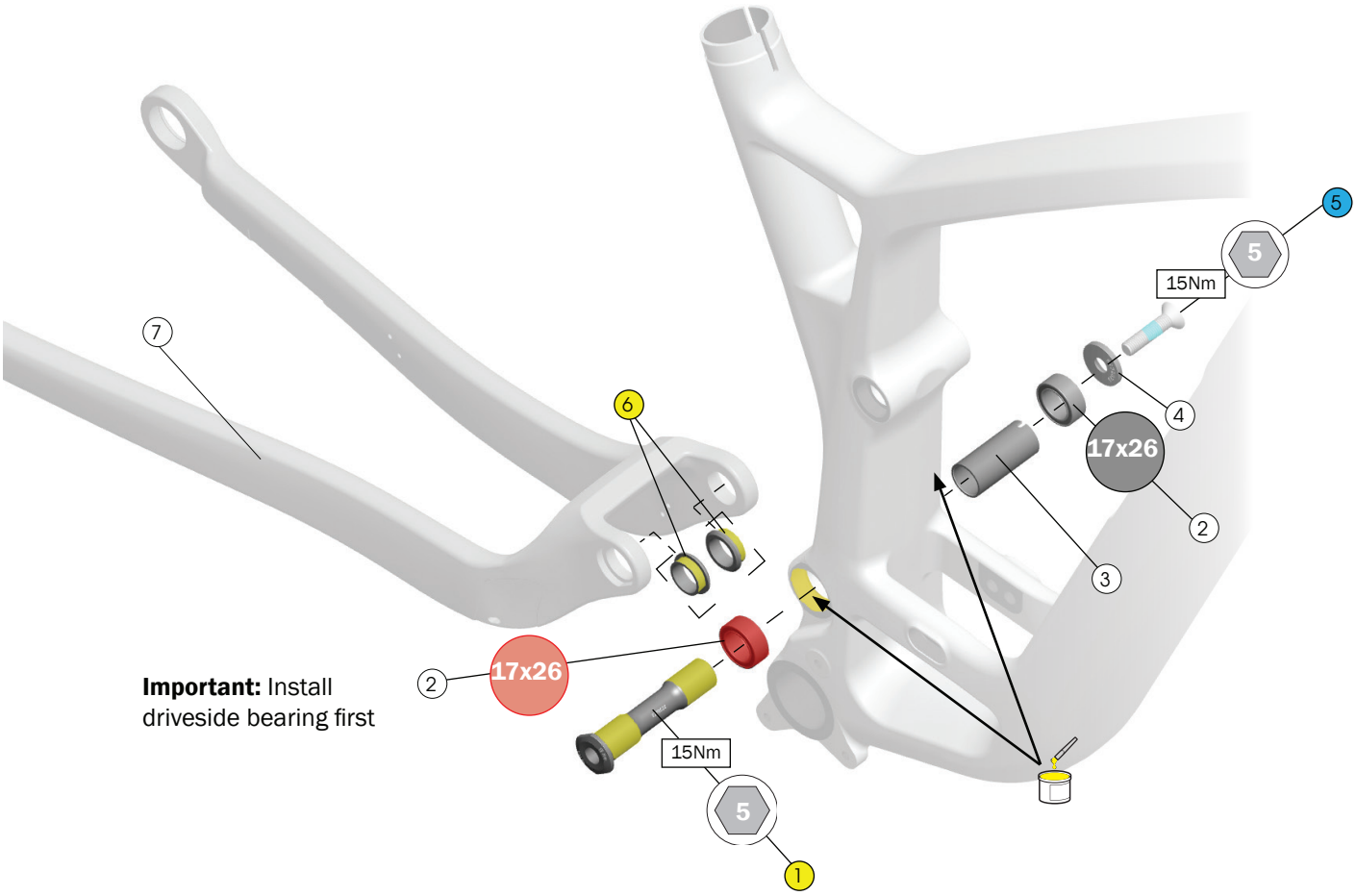

Important: Install driveside bearing first

1. Main pivot axle — W5270022
2. Bearings — W5256338
3. Main pivot sleeve — W600642
4. Concave washer — W5270024
5. Screw — W5270149
6. Hat style washers — W5270023
7. Chainstay:
   Search trekbikes.com to find the color-matched part for your bike.
   Carbon frame — 40776
   Aluminum frame — 38552

Tools

- Bearing press
- 5mm hex tool
- Torque wrench with 8mm hex bit
- Grease
- Threadlocker

Rear shock hardware and dimensions

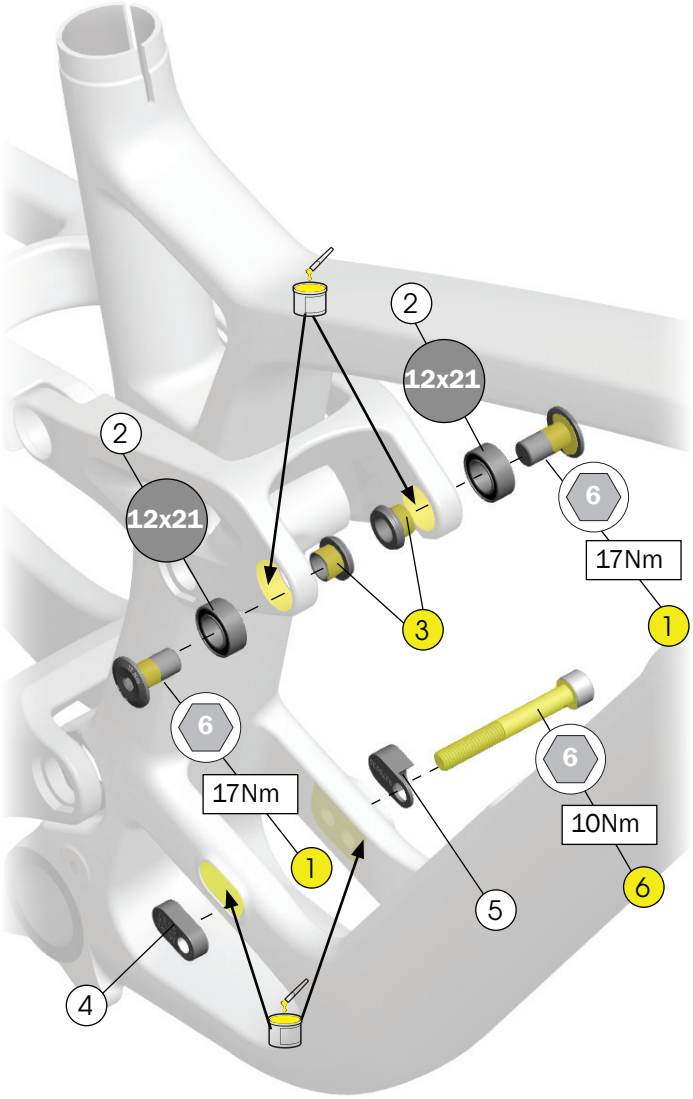



Shock Dimensions
Eye-to Eye-length: 185mm
Stroke length: 55mm
Upper width: 54mm x 10mm
Lower width: 40mm x 8mm

1. Upper bolts, M10 x 1 x 19mm — W5270031
2. Bearings — W5256341
3. Hat-style washers — W5270030
4. Lower shock Mino nut — 5303333
5. Lower shock Mino washer — 5303333
6. Lower bolt, M8 x 1 x 60mm — W5274968

Tools

- Bearing press
- 6mm hex wrenches
- Torque wrench with 6mm bits
- Grease

Setup

Refer to the suspension setup card included with your bike or the suspension calculator at trekbikes.com/suspension-calculator.

For recommended rebound settings refer to the suspension calculator at trekbikes.com/suspension-calculator.

Adjust the progression

The shock mino links can be flipped to fine tune the shock performance for the terrain or rider preference.

Tools

- 6mm hex tool
- Torque wrench with 6mm hex bit

1. Remove the lower shock mount bolt.
2. Flip the mino link nut and washer to the desired positions.
3. Re-insert the shock bolt and torque to 10Nm.

Less progression
More reactive to repeated fast mid-size bumps and square-edge hits.



More progression
More bottom out resistance over big hits and drops



Routing with mechanical shift

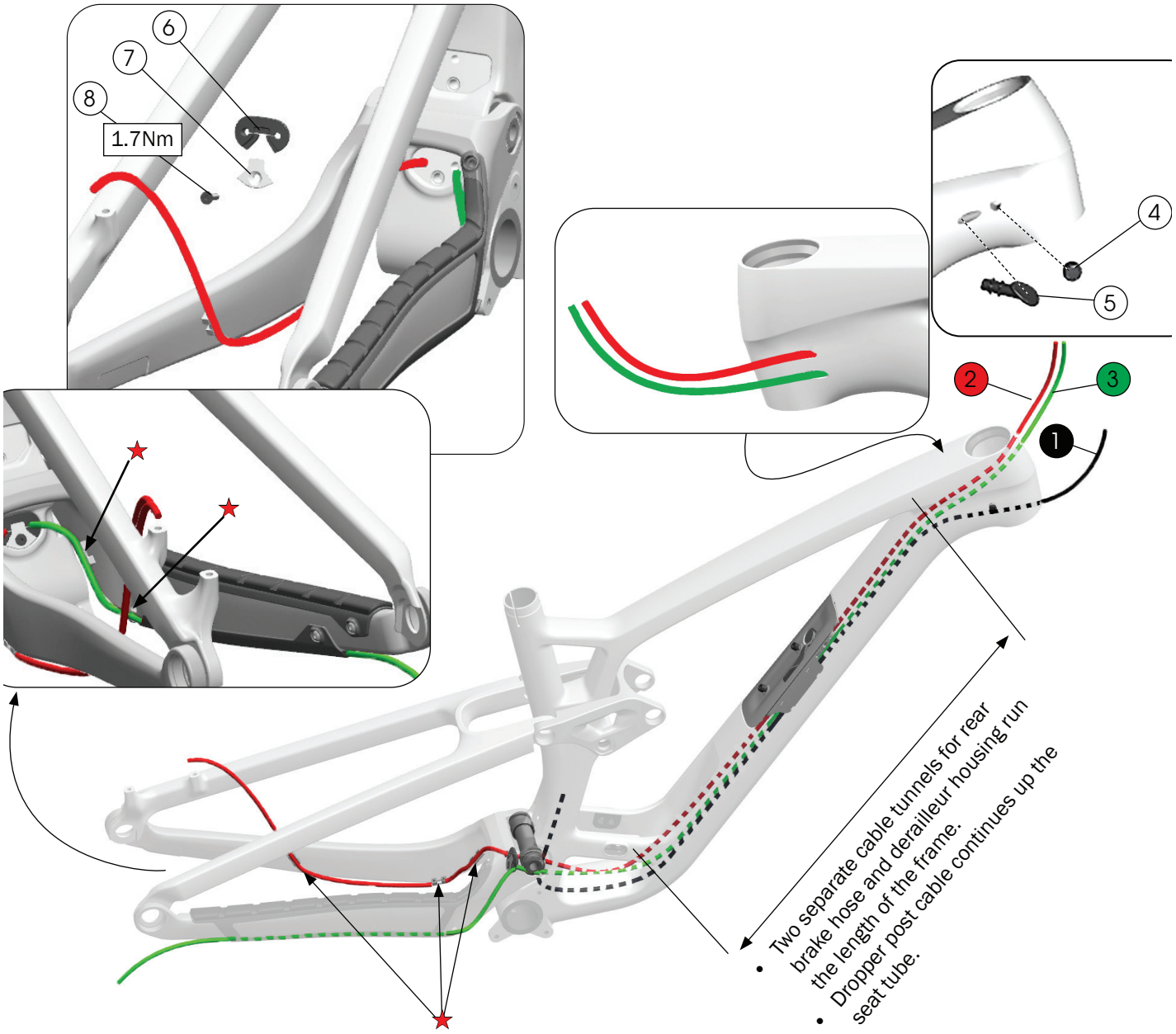

1. Dropper cable
2. Rear brake hose
3. Derailleur housing
4. Plug — W5275264
5. Plug — W5309144
6. Rubber housing guide
7. Exit guide

— 5275988

8. Bolt — W532763
- ★ Zip tie

Routing with AXS shift

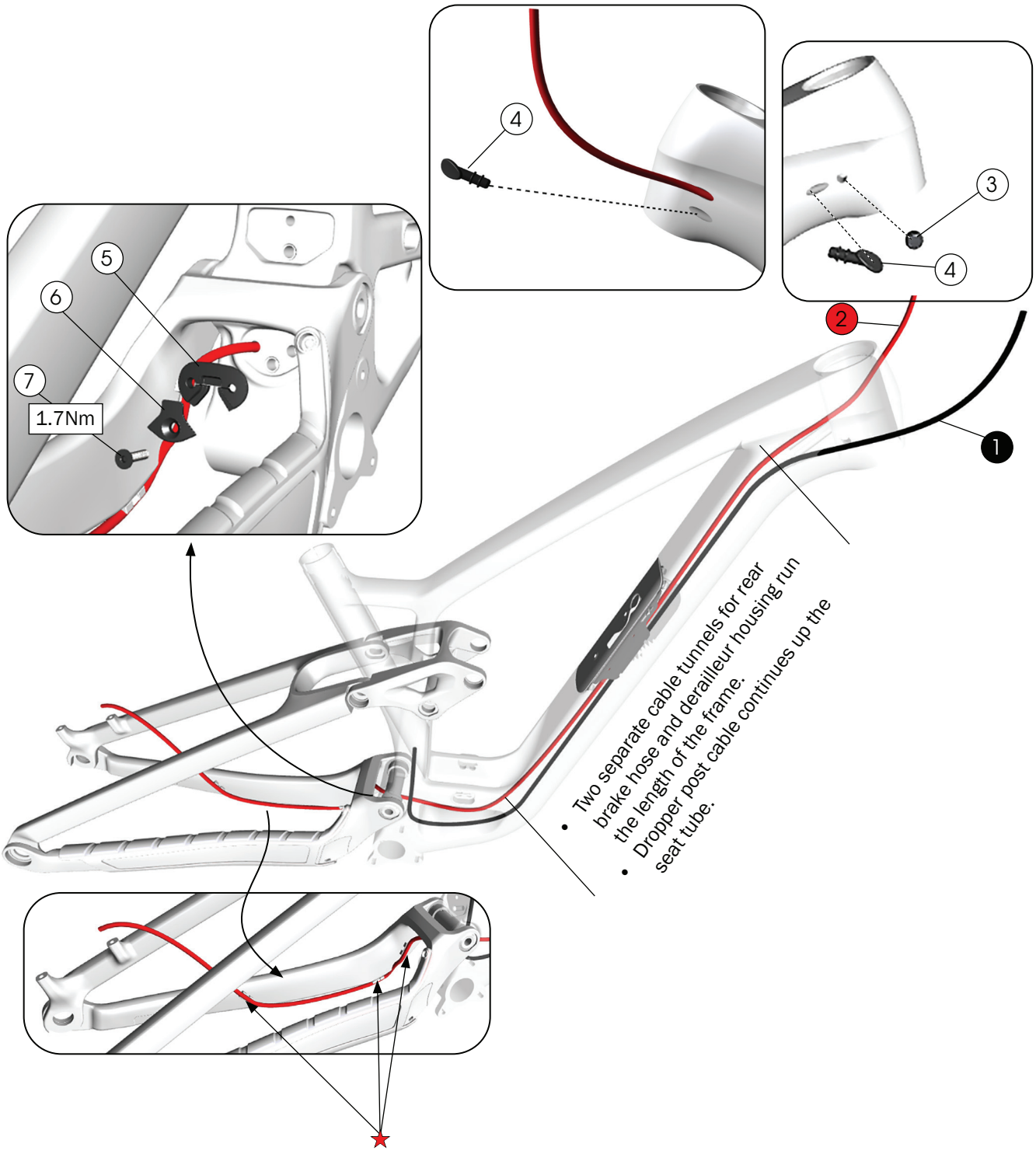

1. Dropper cable
2. Rear brake hose
3. Plug — W5275264
4. Plug — W5309144
5. Rubber housing guide
6. Exit guide

— 5275988

7. Bolt — W532763
★ Zip tie

Frame guards — carbon frame

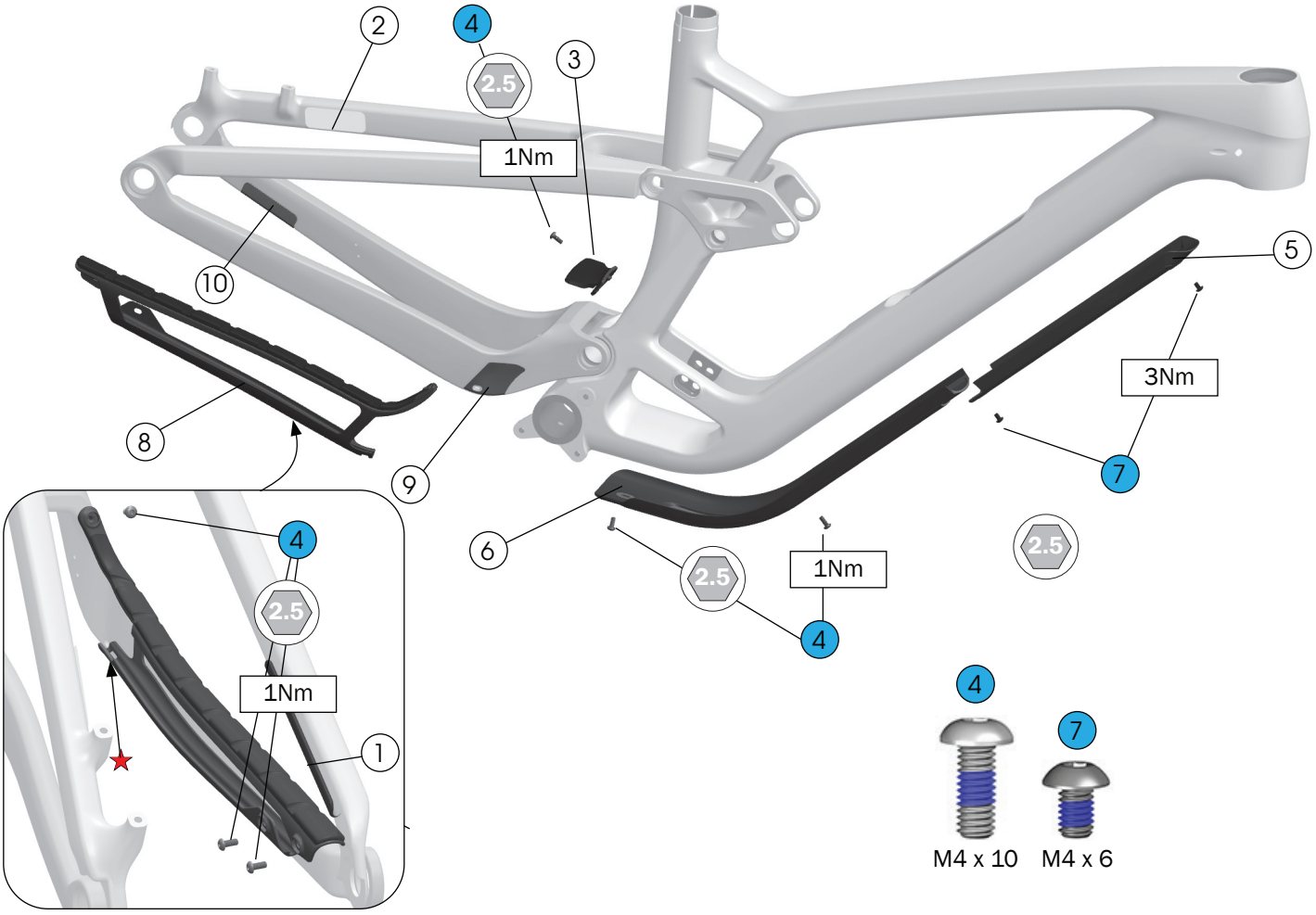

1. Seatstay adhesive guard — W5271371
2. Brake hose adhesive guard — W326986
3. Main pivot mud flap — W5275234
4. Button head screws — W1052364
5. Upper down tube guard:
   XS – ML frames — W5283184
   L – XL frames — W5283185
6. Lower down tube guard:
   XS and S frames — W5283181
   M – XL frames — W5283182
7. Button head screws — W575056
8. Chainstay guard — W5273604
9. Chainstay strike guard — W5273260
10. Rotor guard — W580881

Adhesive guards 1 2

Use isopropyl alcohol to clean the frame surface where the guard attaches. Wait for the alcohol to dry before applying the guard.

Notice: Do not clean the entire frame with isopropyl alcohol. Isopropyl alcohol could damage the paint.

Brazed Guards 9 10

1. To improve adhesion, use sandpaper to roughen the backside of the guard and the area of the frame where epoxy will be applied.
2. Attach the guard with a two-part epoxy.
3. Allow the guard and epoxy to cure for 24 hours.

Frame guards — aluminum frame

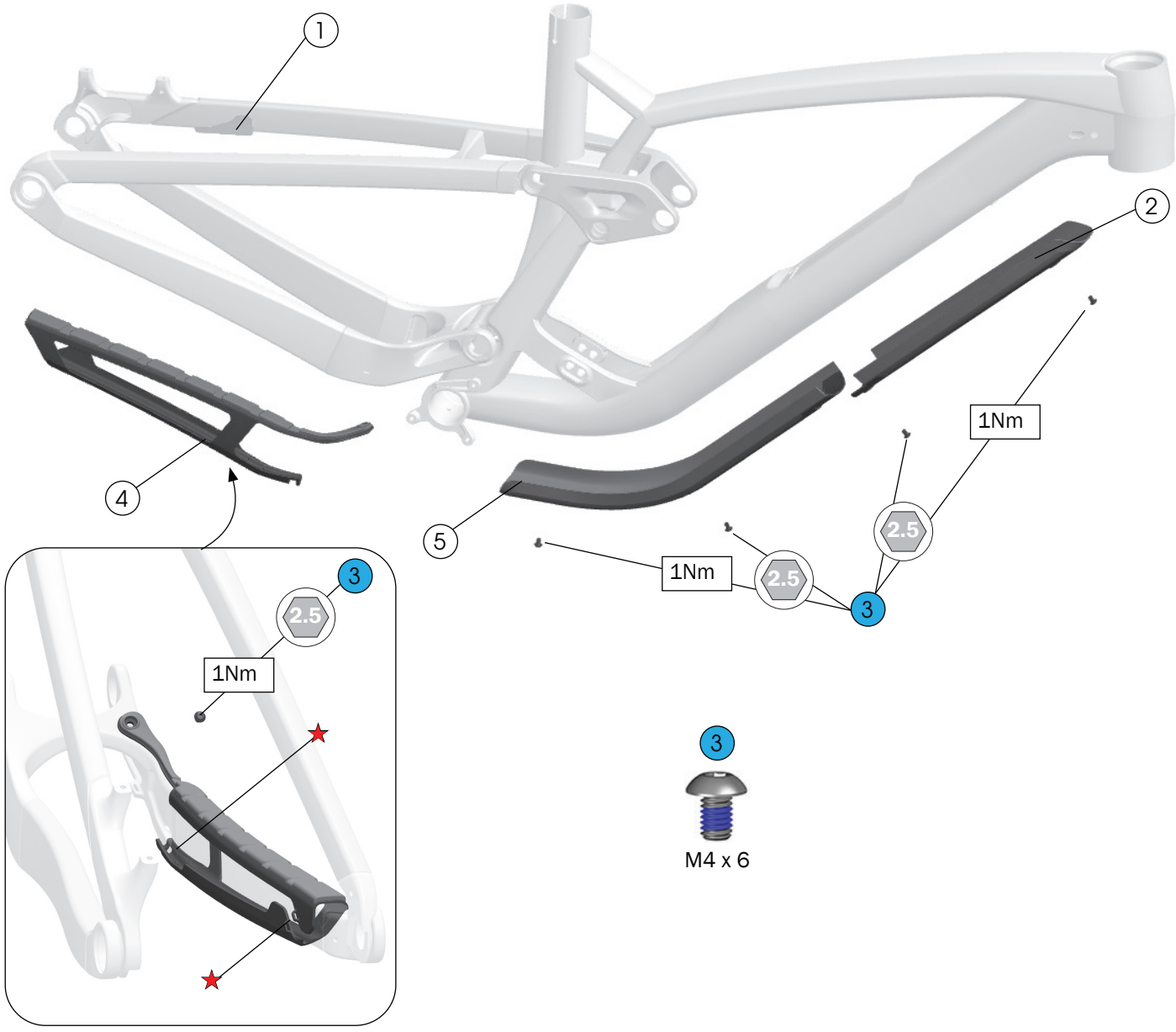

1 Brake hose adhesive guard — W326986

Use isopropyl alcohol to clean the frame surface where the guard attaches. Wait for the alcohol to dry before applying the guard.

Notice: Do not clean the entire frame with isopropyl alcohol. Isopropyl alcohol could damage the paint.

2 Upper down tube guard:

XS – S (27.5” wheels) frames — W5284323

S (29” wheels) – ML frames — W5279933

L – XXL frames — W5283420

3 Button head screws — W575056

4 Chainstay guard — W5271370

Lower down tube guard:

5 XS and S frames — W5283181

M – XL frames — W5283182

Adjust the geometry — headset angle

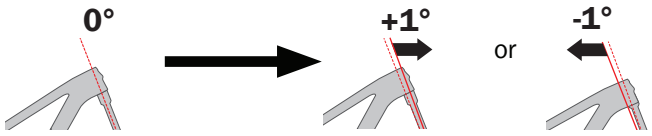

Tools

- Upper angled cup:
  XS - L frames — W5295319
  XL - XXL frames — W5295274
- Lower angled cup — W5294449
- Adjustable headset alignment tool — 5310000
- Headset cup removal tool
- 8mm hex tool (150mm minimum length for XL frame)
- Headset cup press
- Painter's tape
- Grease

Remove components

1. Remove the fork.
2. Remove the upper headset assembly.
3. Use the headset cup removal tool to remove the lower headset cup.

Install the alignment tool

Use the alignment tool to mark the centerline to which you will align the lower cup.

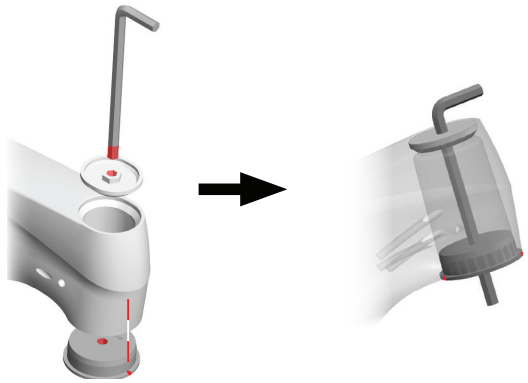

1. Thread the hex tool through the upper alignment tool. Insert the tools into the upper head tube.
2. Position the lower alignment tool with the notches to the front and back of the head tube.
3. Thread the lower alignment tool over the hex tool. The hex tool will keep the notches aligned as you insert the alignment tool.
4. Place a piece of painter's tape on the head tube, then draw a line on the tape that aligns with the notch.

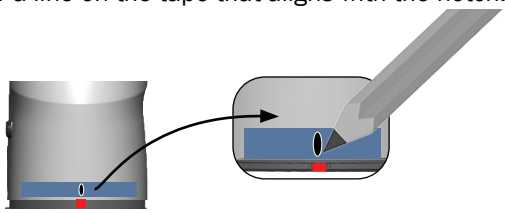

5. Remove both pieces of the alignment tool.

Install the angled cups

1. Grease the cups and head tube bores.

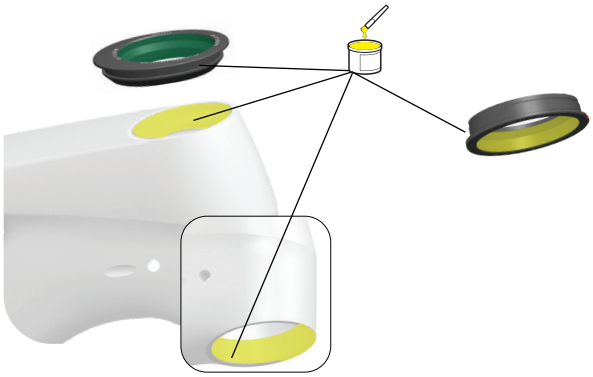

2. Position the upper cup and insert it into the head tube.

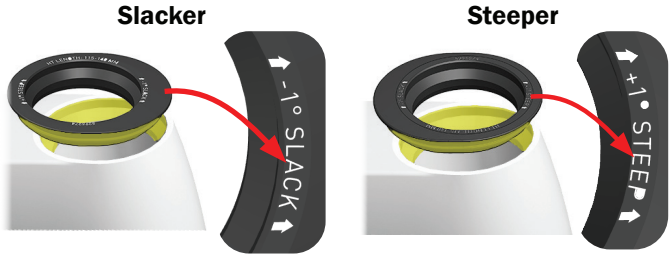

3. Position the lower cup to match the angle of the upper cup.



4. Align the notch on the cup with the line on the painter's tape.
5. Press in the lower cup. **Note:** position the press with the handle above the head tube.

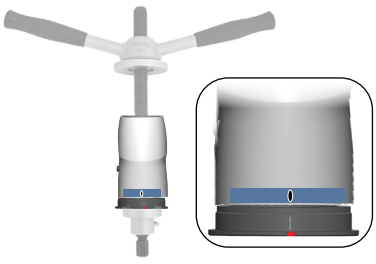

6. Remove the press. Verify the notch on the lower cup is aligned with the line on the tape. If it is not, remove cup and reinstall in correct position.
7. Remove the painter's tape.

Adjust the geometry — seatstay mino link

Tools

- 4mm and 6mm hex tools
- Torque wrench with 4mm and 6mm bits
- Small clean towel or cloth

1. Remove the rear wheel.
2. Place a small clean towel or cloth over the down tube to protect the paint.
3. Remove the upper shock mount hardware. Use the 6mm hex tool to remove the bolts.

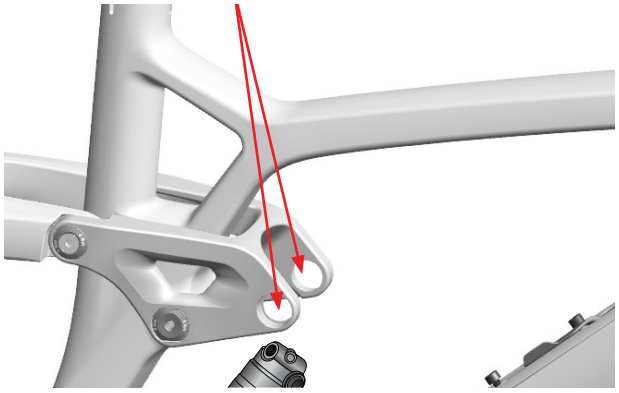

4. Lower the shock and rest it on the towel or cloth covering the down tube.

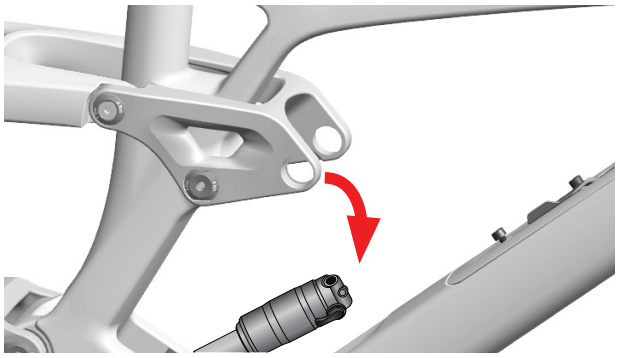

5. Rotate the rocker pivot forward to pull the mino links into the window in front of the seat tube.

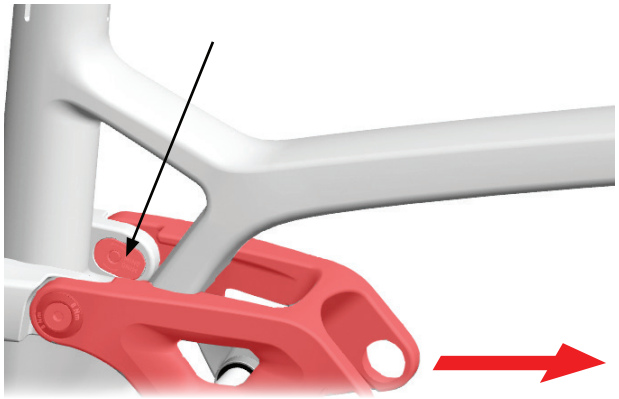

6. Use a 4mm hex tool to turn the screw in the mino link to flip the link to either the slacker or steeper position. Repeat this process with the other mino link.

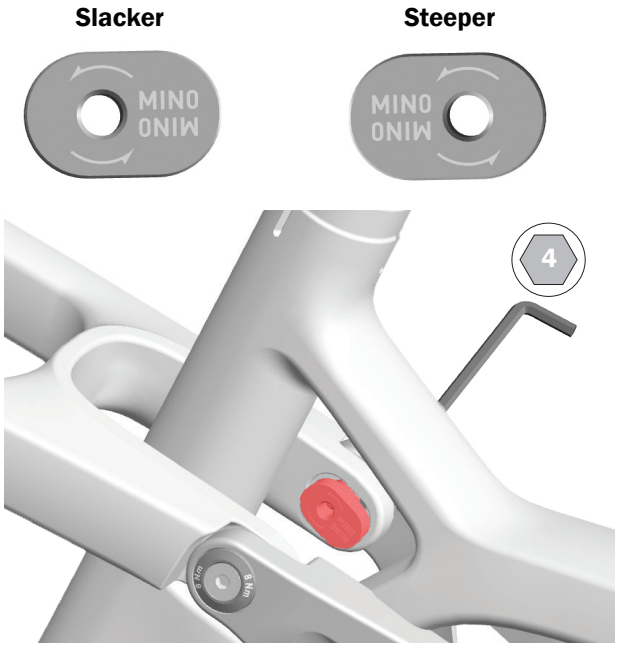

7. Torque the screws to 8Nm.
8. Re-install the upper shock hardware and torque the bolts to 17Nm.

Down tube storage

Carbon frame

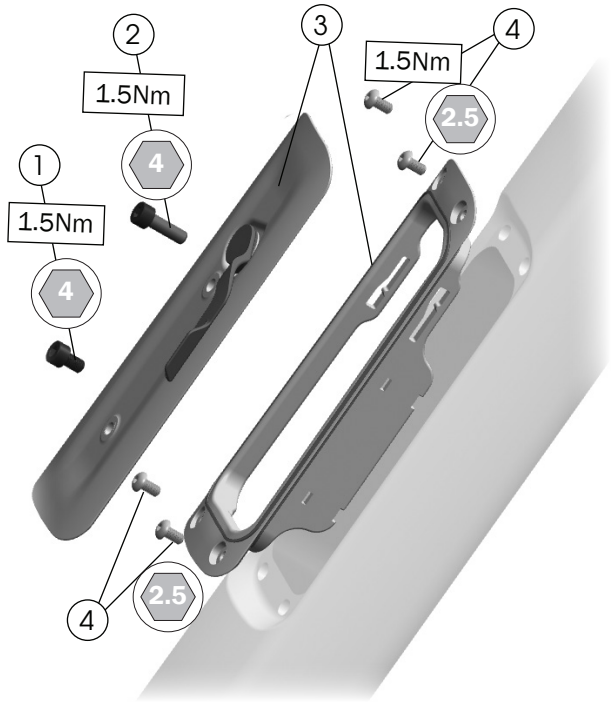

1. Water bottle cage bolt, 8mm long
2. Water bottle cage bolt, 16mm long
3. Storage door
4. Button head screws — W575056 (includes nuts, not used on carbon frames)

— W5257590

Aluminum frame

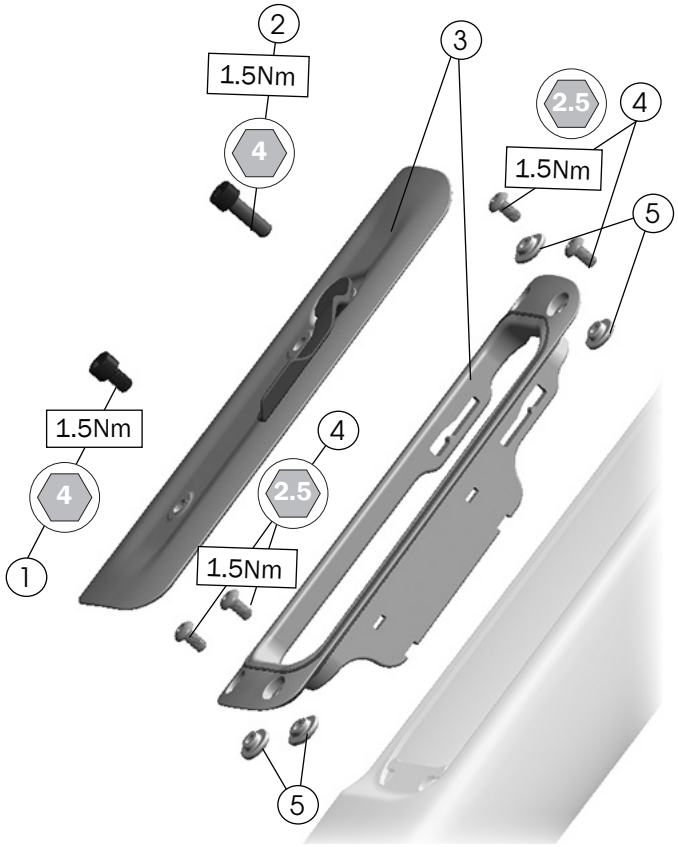

1. Water bottle cage bolt, 8mm long
2. Water bottle cage bolt, 16mm long
3. Storage door
4. Button head screws
5. Nuts

— 1042535

— W583862

Specifications

Chainline (1x only)

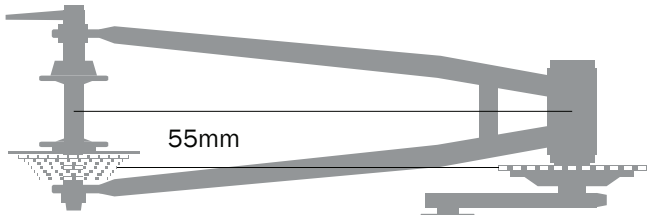

Chainring (1x only)

Minimum	Maximum
28T	Round: 34T
	Oval: 32T

Rear brake mount

Minimum	Maximum
180mm, direct mount	Adaptable to 203mm

Maximum tire size

Notice: Measurements of actual tires may vary. Always verify there is sufficient clearance between the tire and the frame. Improper tire size could damage the bicycle frame. Trek recommends 6mm clearance above and on the sides of the tire.

Wheel set	Maximum tire size
29"	29" x 2.5"
27.5" (XS and S frame)	27.5" x 2.5"

Bottom bracket /ISCG tabs

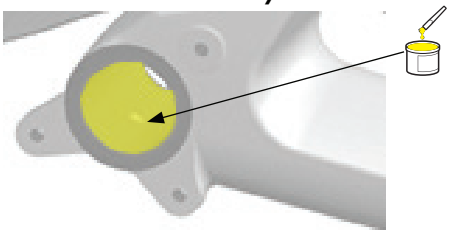

Bottom bracket	ISCG tabs
BSA 73	ISCG 05, 3 bolt

Seat post

WARNING

Always follow the seatpost manufacturer's minimum insertion recommendation. Failure to follow the recommendation could cause damage to the seatpost and result in injury to the rider.

Measurement			
Maximum insertion	Frame	Carbon	Aluminum
	XS	205mm	180mm
	S (27.5" and 29" wheels)	225mm	210mm
	M	255mm	240mm
	ML	266mm	250mm
	L	281mm	265mm
	XL	316mm	300mm
	XXL	—	330mm
Seat tube inside diameter		34.9	
Seat tube post clamp outer diameter		39.5	

Fork

WARNING

Exceeding the recommended maximum fork length could damage the bicycle and result in injury to the rider.

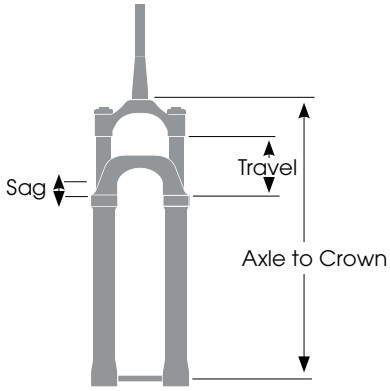

Frame/ Wheel Size	Axle to Race (mm)		Travel (mm)
XS and S	Recommended	534	140
27.5" wheels	Maximum	550	150
S, M, ML, L, XL, XXL	Recommended	562	150
29" wheels	Maximum	578	160

Refer to the suspension setup card included with your bike or the suspension calculator at trekbikes.com/suspension-calculator.