TREK

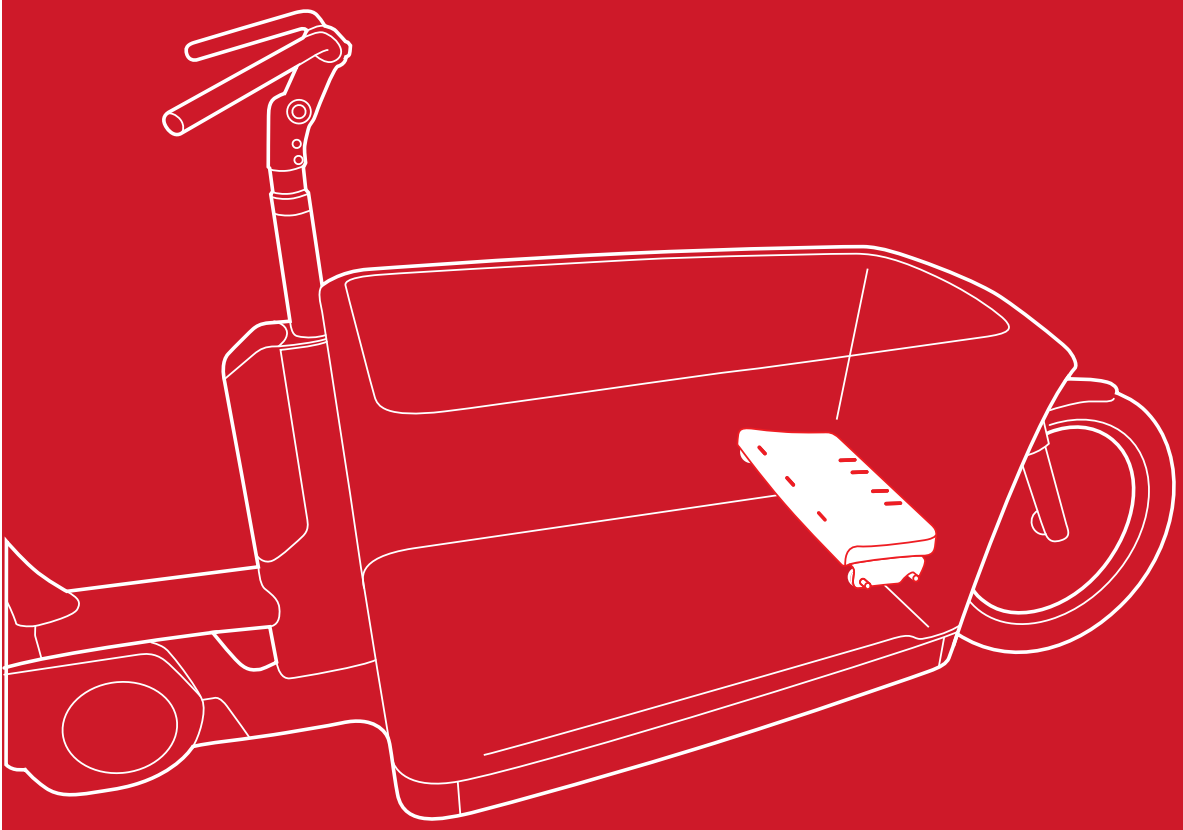

Fetch+ 4 Bench

ASSEMBLY INSTRUCTIONS

Safety

WARNING: FAILURE TO FOLLOW THESE WARNINGS AND INSTRUCTIONS COULD RESULT IN SERIOUS INJURY OR DEATH.

Hardware and assembly

- Do not modify the bench or any parts of the bench.
- Check the bench and straps/buckle for damage or discoloration over time. Do not use the bench if any part is broken or showing signs of deterioration and contact your Trek or Diamant dealer for a replacement.
- To disassemble the bench, follow the instructions in reverse.
- If you remove the bench from the brackets, clean the bolts using isopropyl alcohol and apply threadlocker to the threads during reinstallation.
- Always tighten the bolts to the specified torque value using a torque wrench. Hand-tighten the knobs. If a bolt or knob has loosened, retighten it.

Rider requirements

- Children must be tall enough so their feet can reach the cargo box floor when seated on the bench but no taller than 49.5 in (126 cm). Children must also be able to sit independently while supporting their own neck (including a helmet).
- Children riding on the bench should be wearing a helmet at all times.

Lap belt use

- Always use the lap belt when a child is on the bench and ensure it's securely buckled.
- Buckle the lap belt when not in use.
- Ensure the lap belt is not too tight or loose around the child's waist. You should be able to fit your hand between the child and the straps.

General use

- The bench surface can get hot in the sun. Check the surface temperature before use.
- Never leave a child on the bench unattended.
- Ensure there are no sharp objects the child can reach from the bench.
- The bicycle will balance and turn differently with added weight on the front end. Be cautious and take it slow at first. See the comprehensive owner's manual for more information.
- Check your local regulations for installation of a front bench seat — some countries do not allow this.
- Do not clean the bench surface with soap. Use warm water only.

Maximum weight

- The bench can carry a maximum of two children. Each child individually must not exceed 25 kg (55 lbs). However, the maximum combined weight on the bench must not exceed 40 kg (88 lbs). See below for examples of overloading.
- Recheck the weight of each child over time to make sure they have not outgrown the maximum weight.

1

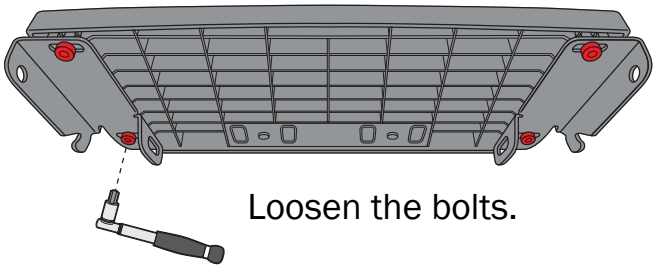

Loosen the bolts.

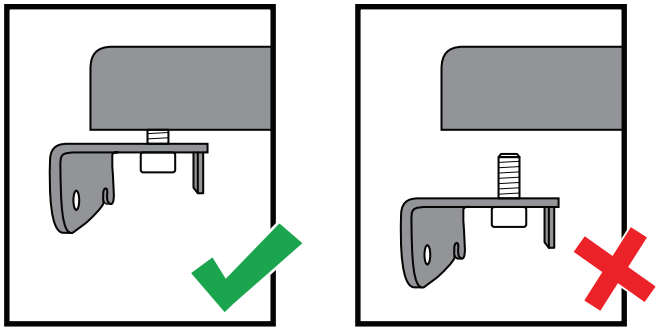

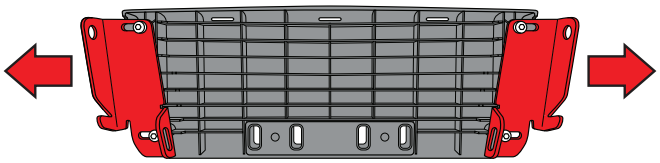

2

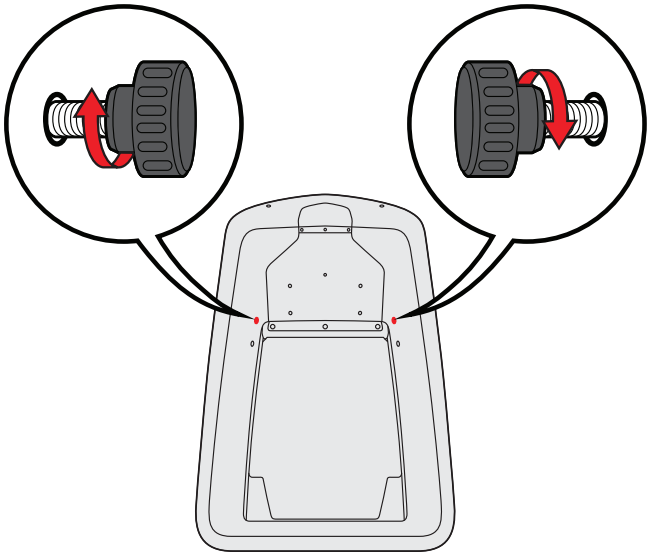

Do not fully tighten the knobs.

3

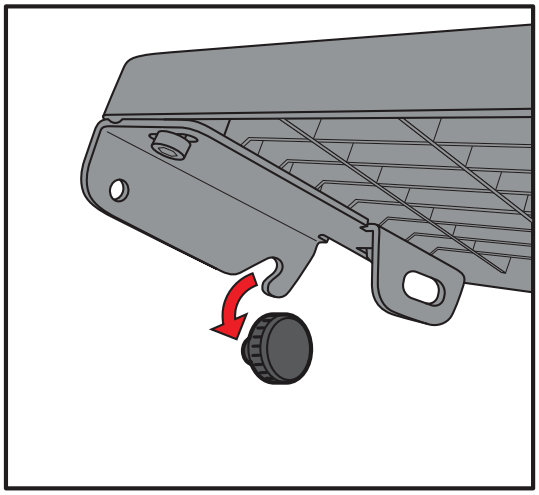

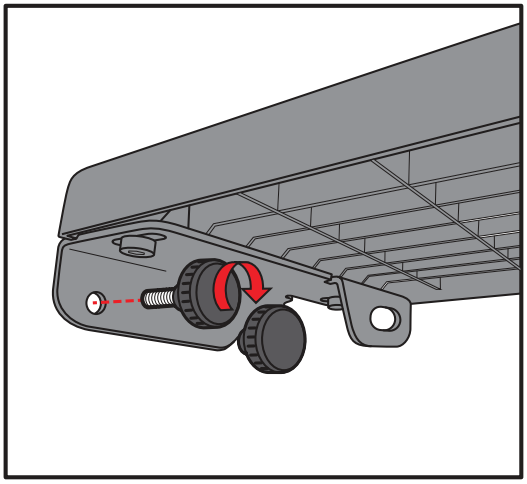

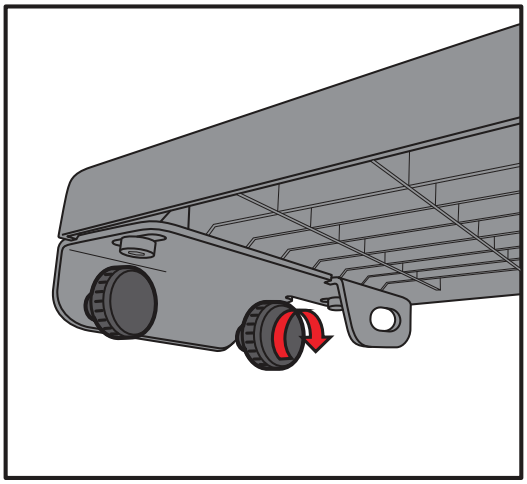

Tighten the knobs.

4

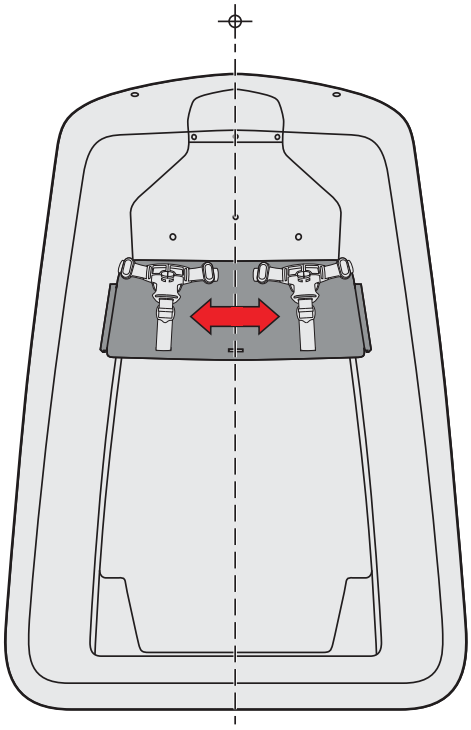

Center the bench.

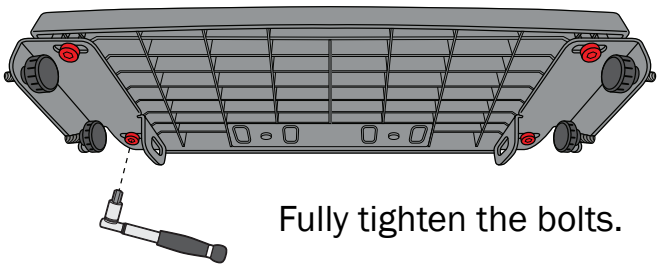

6Nm

Fully tighten the bolts.

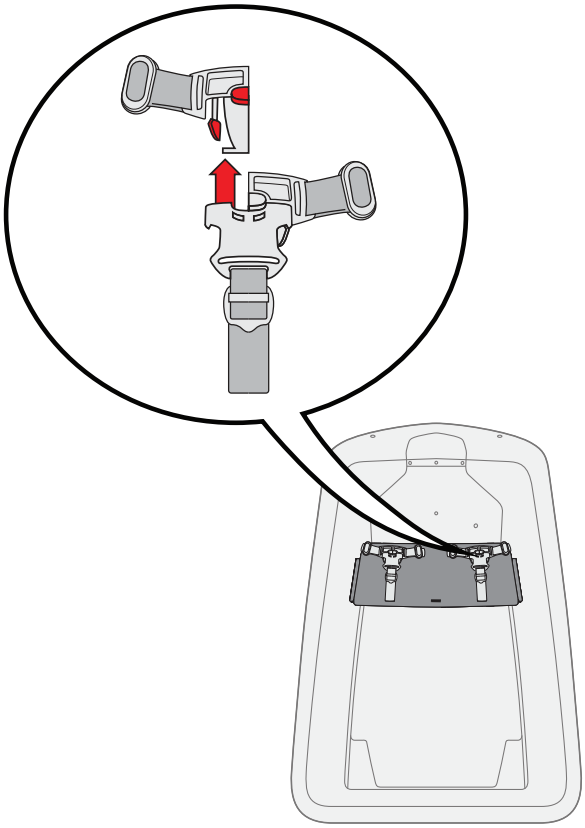

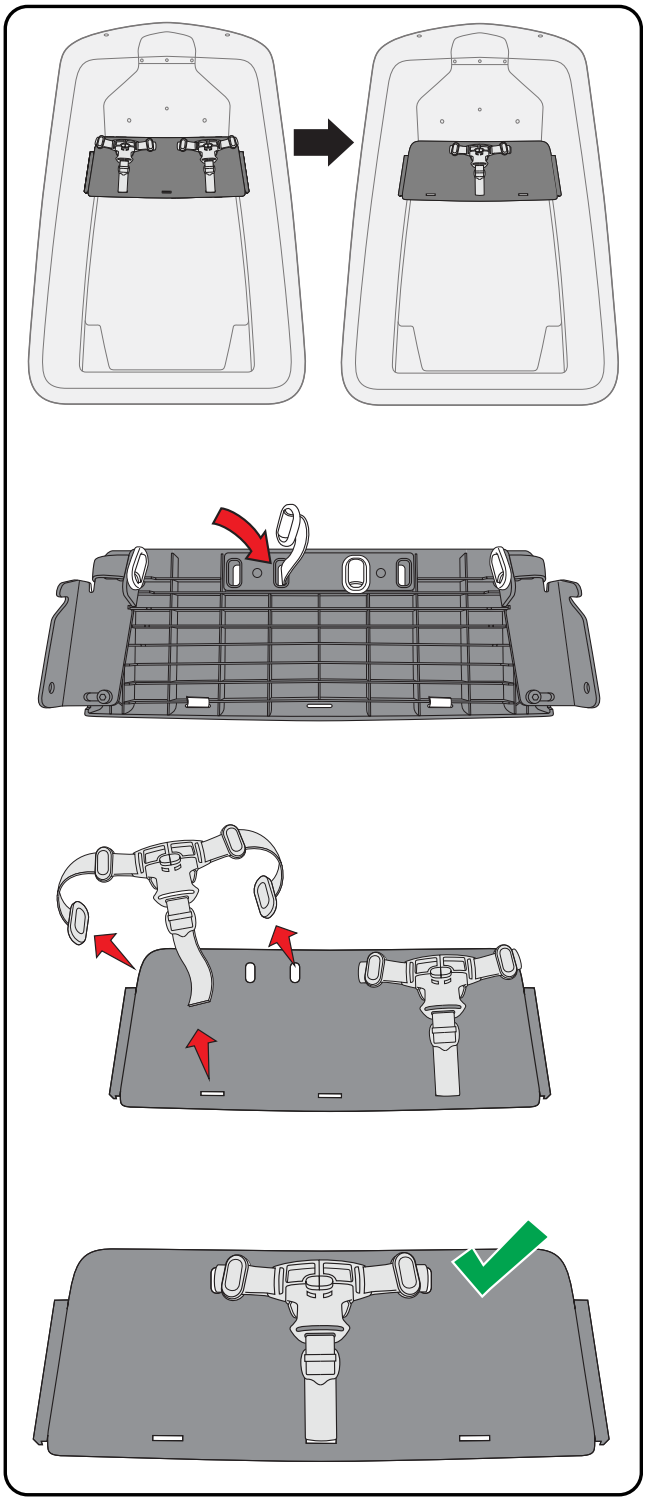

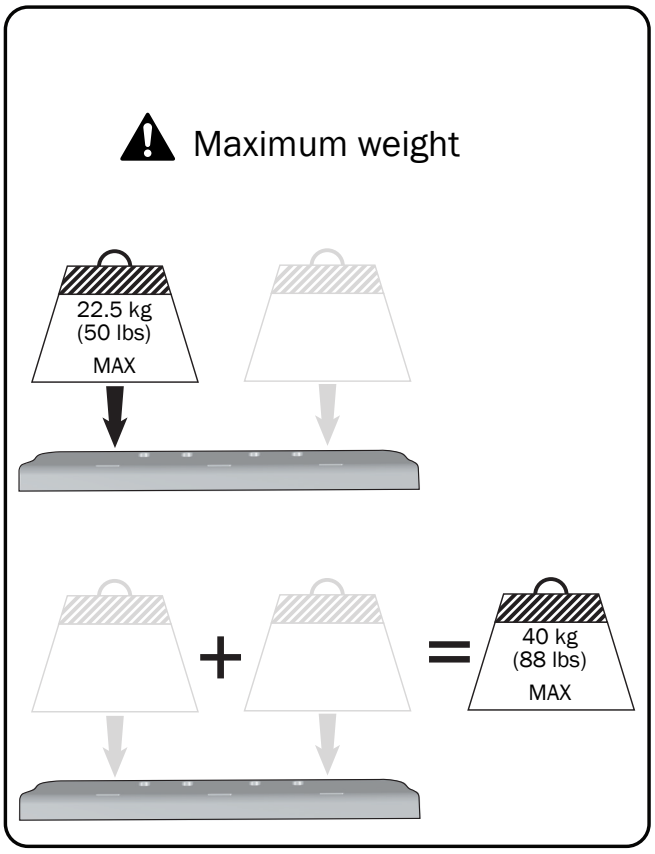
Maximum weight
22.5 kg
(50 lbs)
MAX
40 kg
(88 lbs)
MAX