

FETCH+ 2 REAR PANNIERS KIT

ASSEMBLY INSTRUCTIONS

Safety

⚠ WARNING

Failure to follow these warnings and instructions could result in serious injury or death.

- Do not modify any components of the Rear Panniers Kit.
- Check the Rear Panniers Kit components for damage or discoloration over time. If any Rear Panniers Kit components are broken or show signs of deterioration, do not use them and contact your Trek dealer for a replacement.
- If you remove any bolts, clean them using isopropyl alcohol and apply threadlocker to the threads during reinstallation.
- If a bolt has loosened, retighten it to the indicated torque.
- If passengers are riding in the cargo area, you must have either footguards or panniers installed to keep passengers' feet out of the rear spokes.

NOTE: You can replace the footguards that come with the Family Pack Kit with the rear panniers. Do not install both of them on the bicycle at the same time.

Footguards

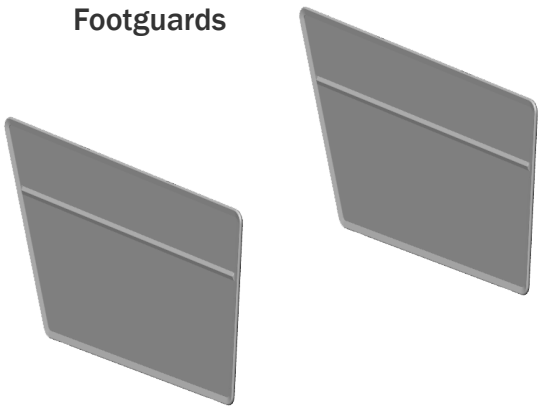

For a rear pannier & platform compatibility chart and extended instructions, please see the Service Instruction: Fetch+ 2 rear panniers to rear foot platforms compatibility & drilling template.

In the box

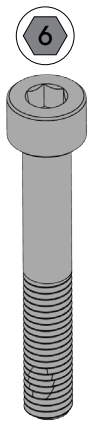

x1

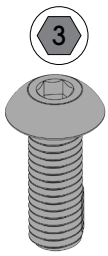

x6

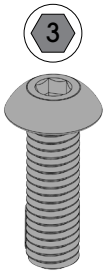

x4

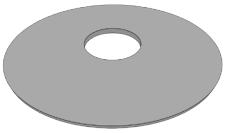

x4



x6

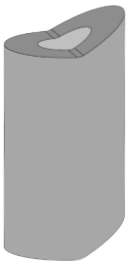

x1

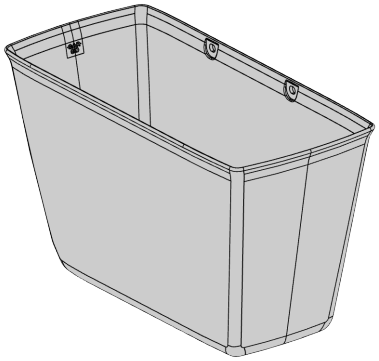

x2

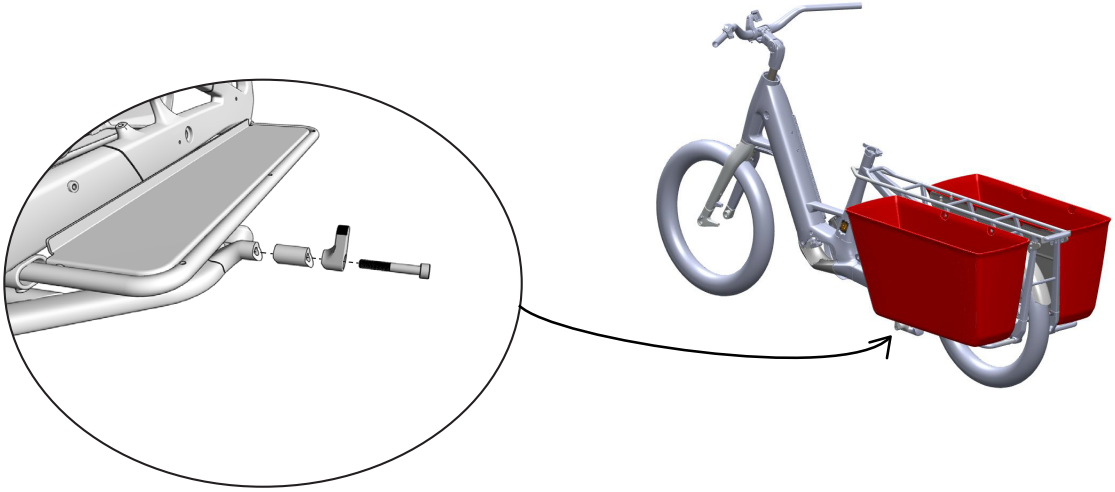

Tools required

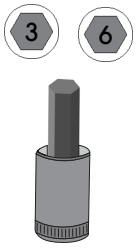





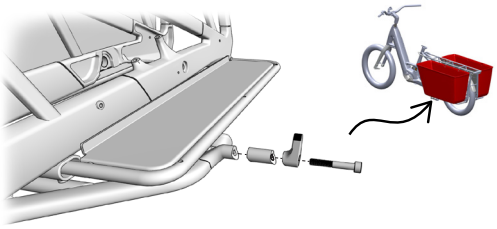

1

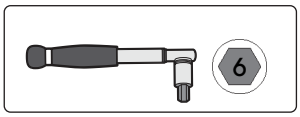

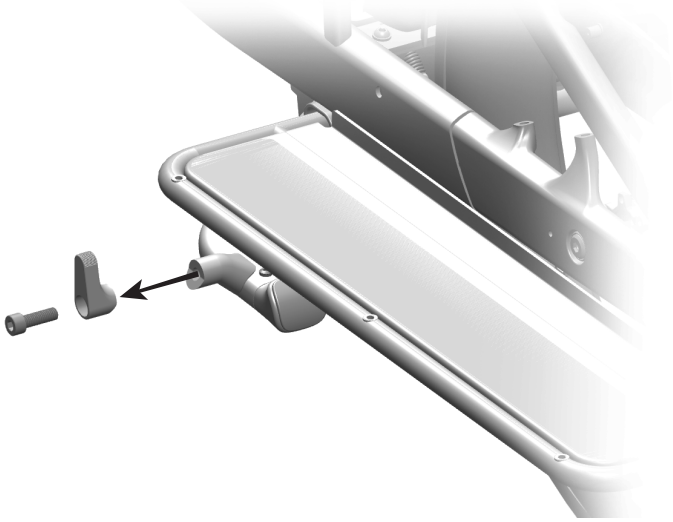

2

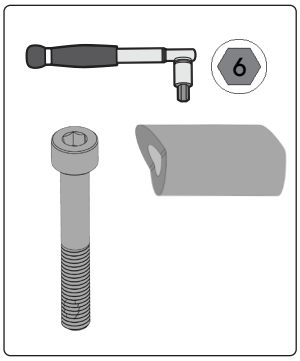

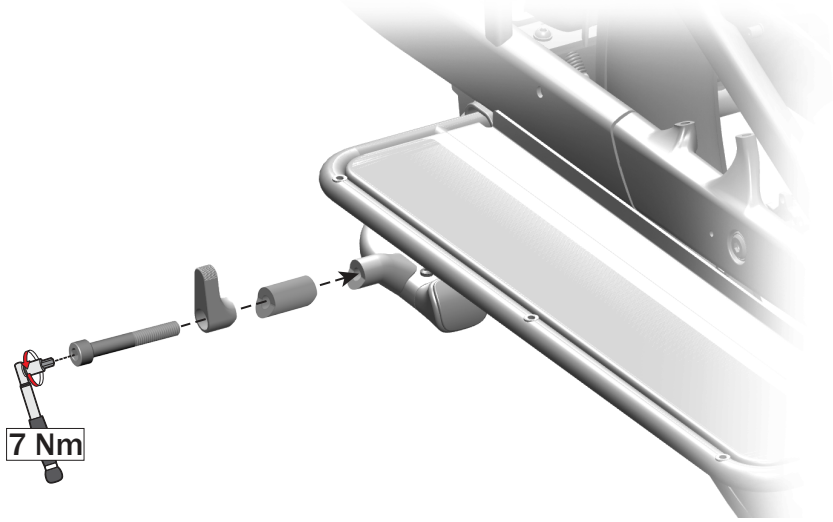

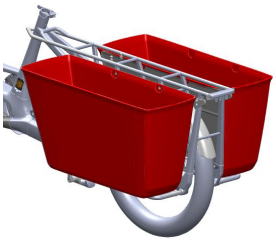

3

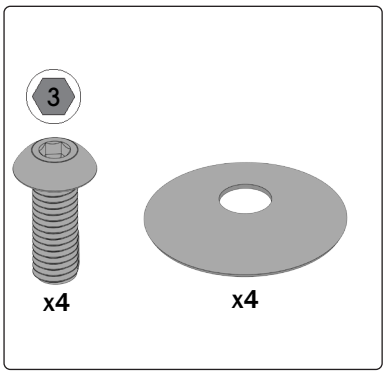

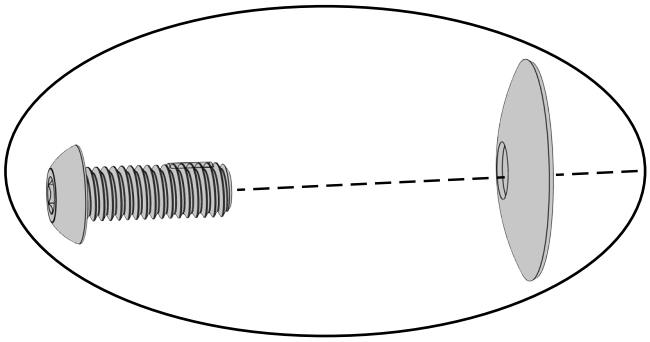

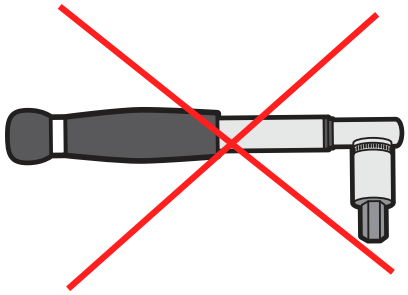

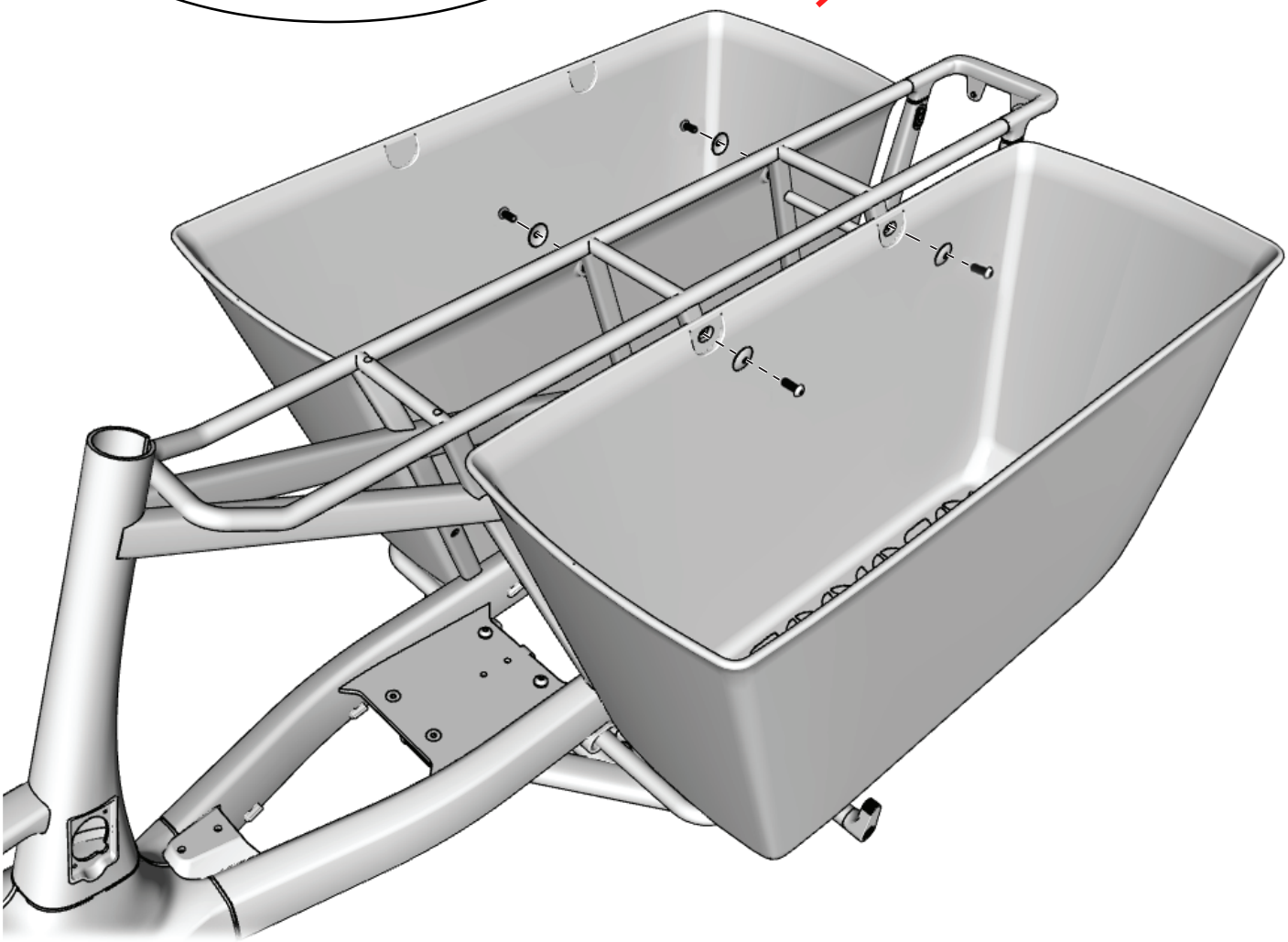

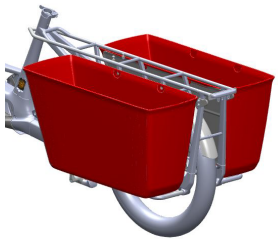

4

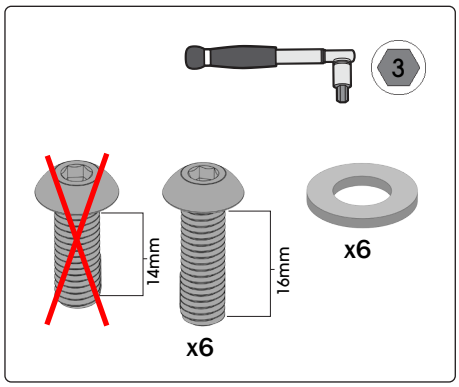

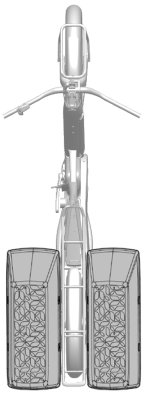

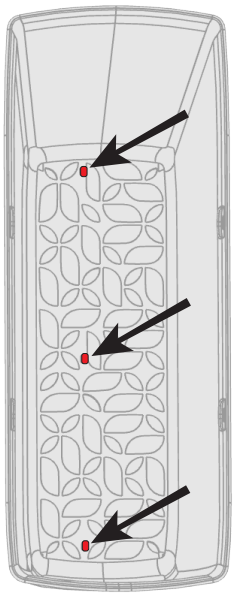

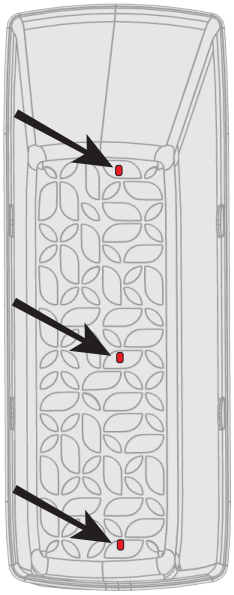

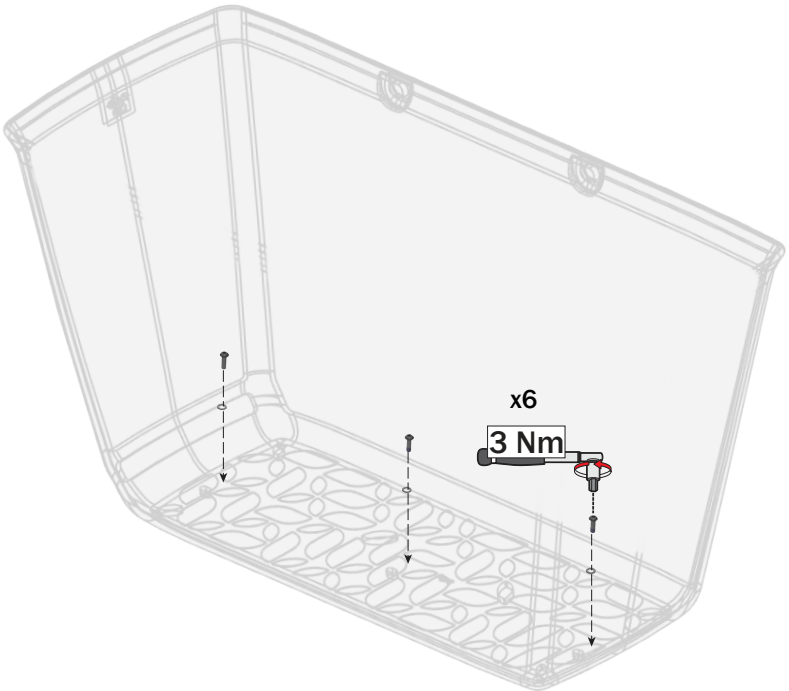

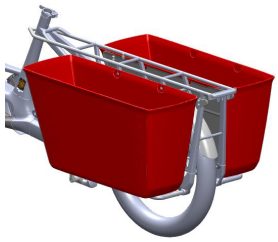

5

