

FETCH+ 2 FRONT PANNIERS AND RACK KIT

ASSEMBLY INSTRUCTIONS

October 2023

Safety

⚠ WARNING

Failure to follow these warnings and instructions could result in serious injury or death.

- Do not modify any components of the Front Panniers and Rack Kit.
- Check the Front Panniers and Rack Kit components for damage or discoloration over time. If any Front Panniers and Rack Kit components are broken or show signs of deterioration, do not use them and contact your Trek dealer for a replacement.
- If you remove any bolts, clean them using isopropyl alcohol and apply threadlocker to the threads during reinstallation.
- If a bolt has loosened, retighten it to the indicated torque.

In the box

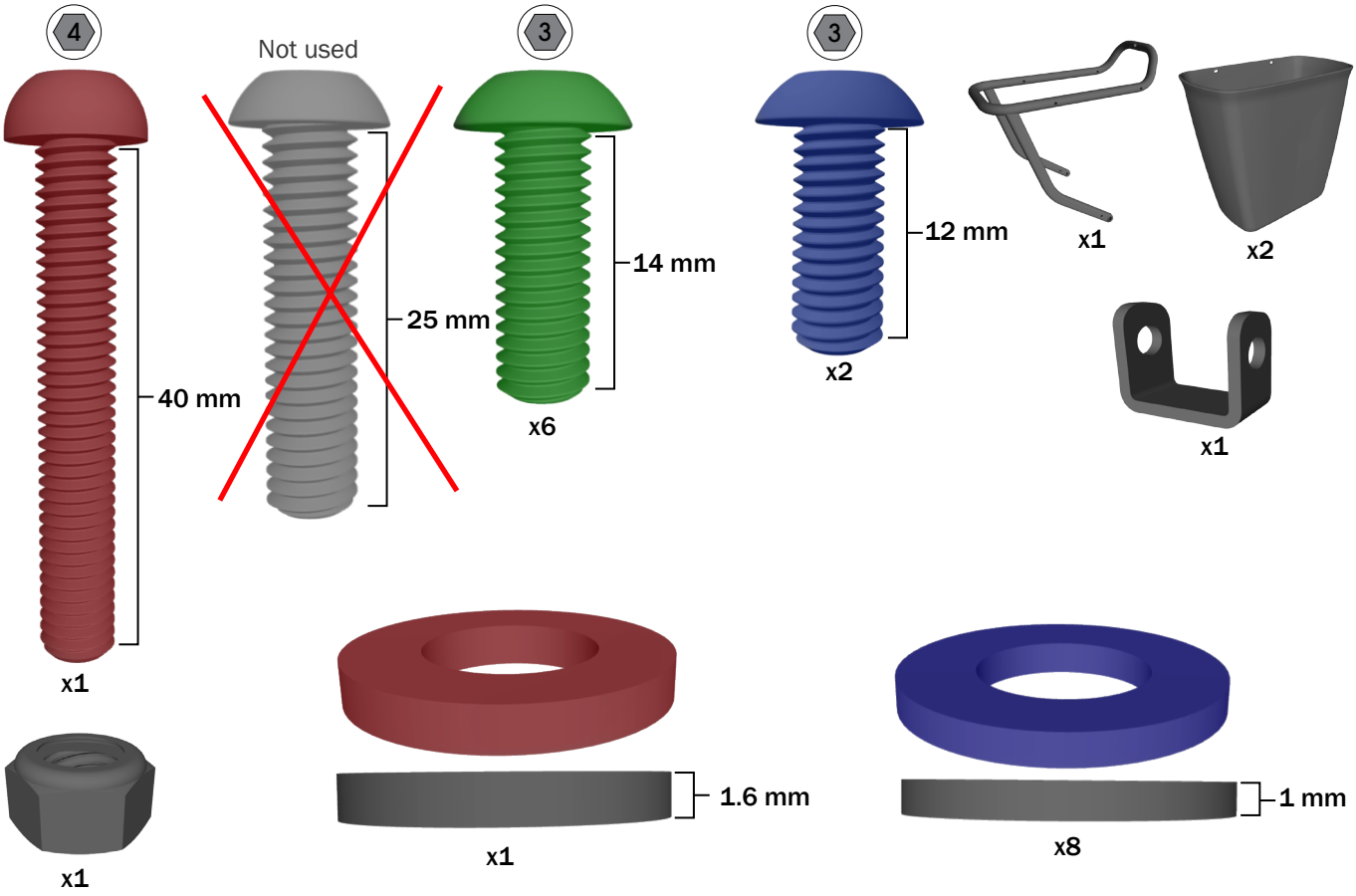

Tools required

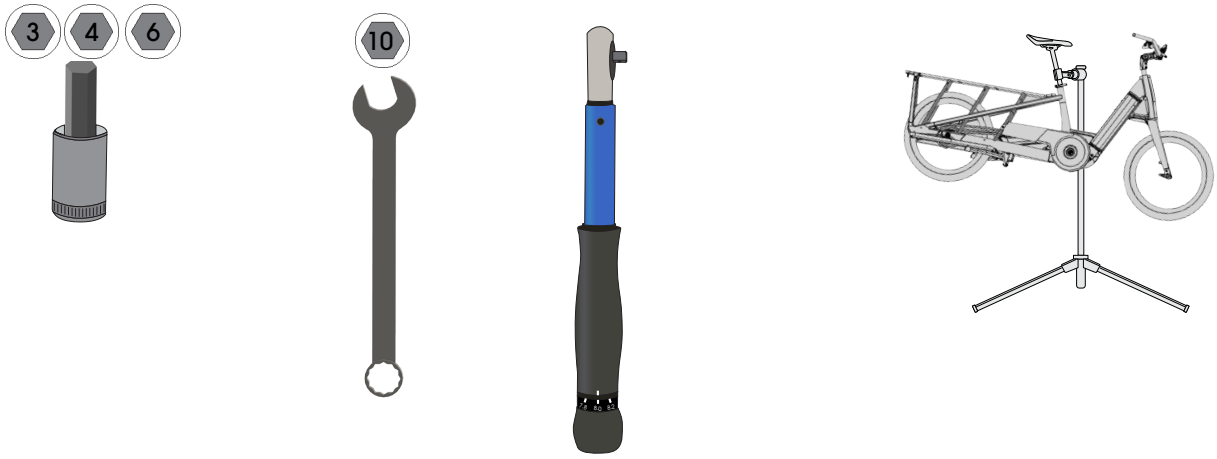

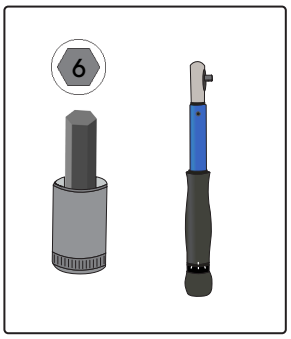

1

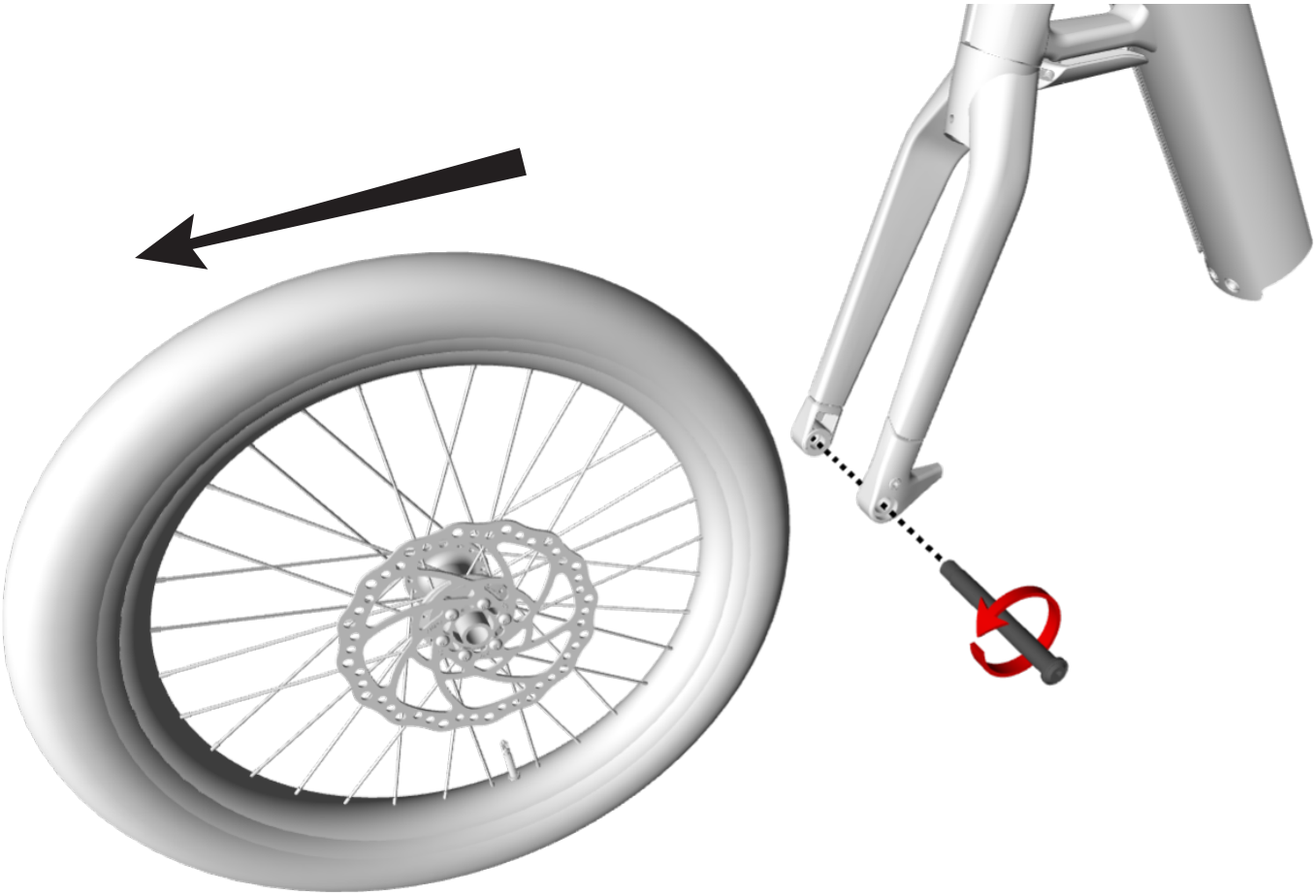

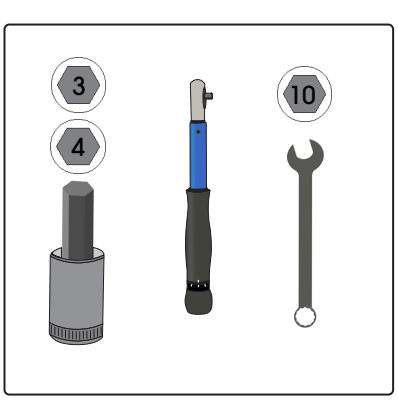
3
4
10

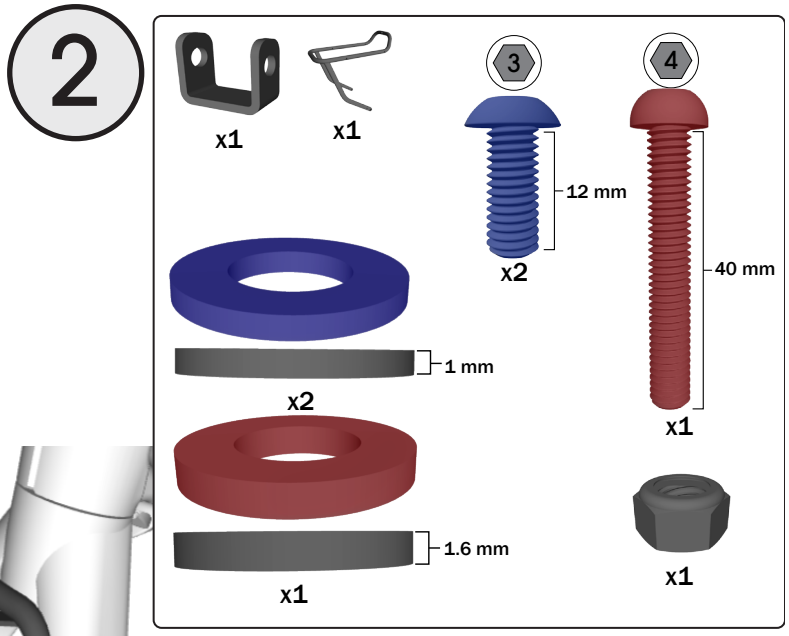
2
x1
x1
3
12 mm
x2
4
40 mm
x1
1 mm
x2
1.6 mm
x1
x1

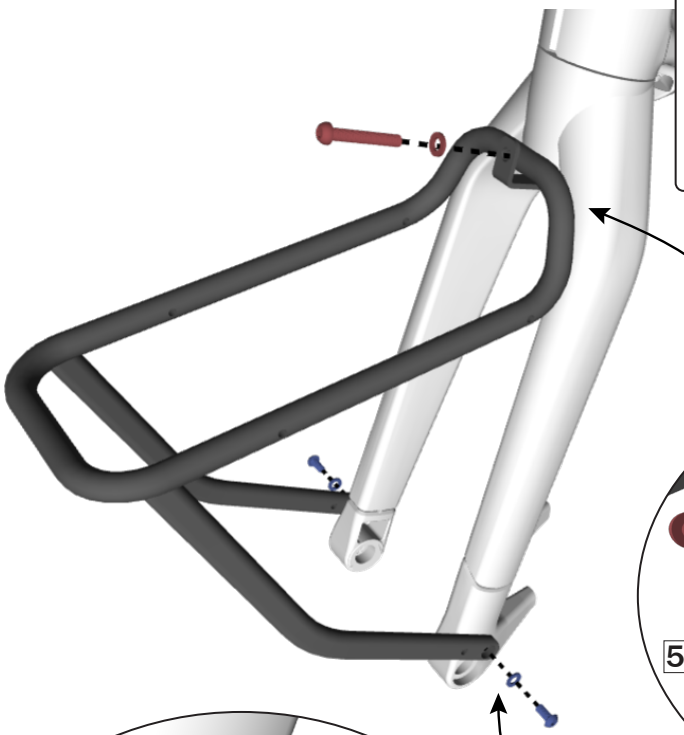

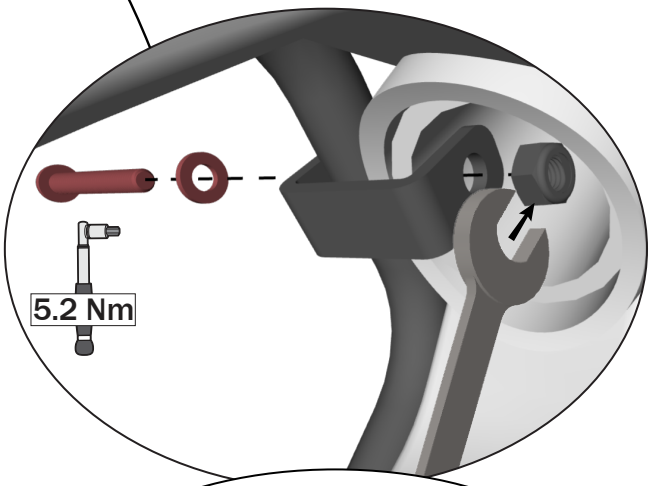
5.2 Nm

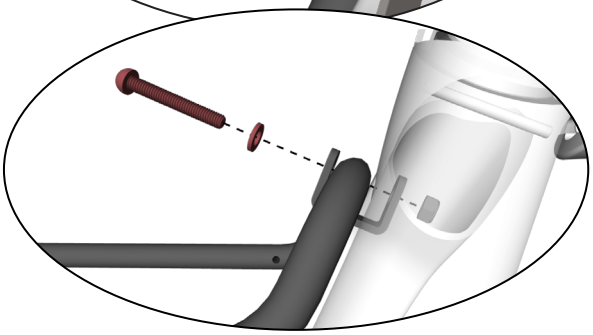

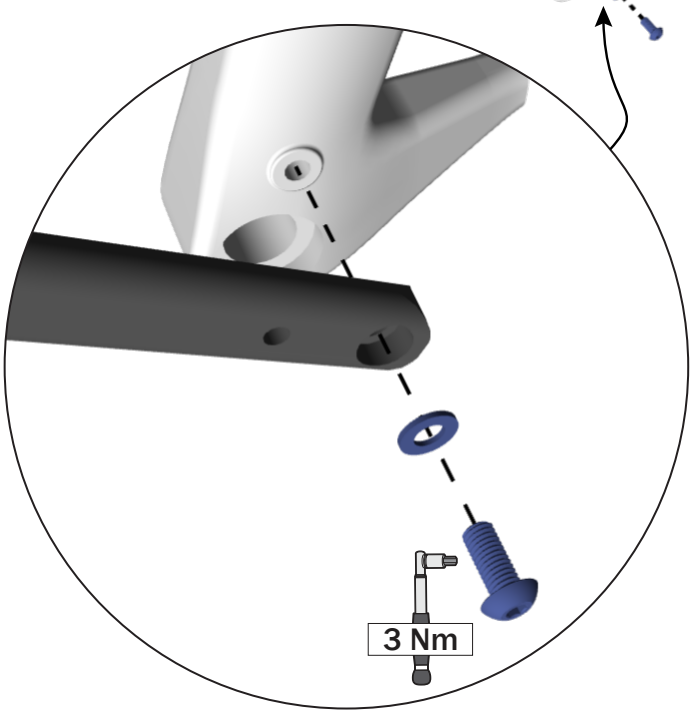
3 Nm

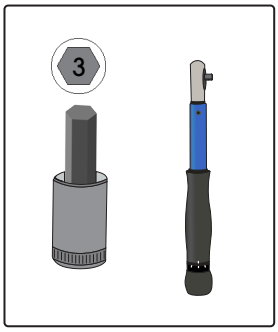

3

