

FETCH+ 2 FENDERS KIT

ASSEMBLY INSTRUCTIONS

Safety

⚠ WARNING

Failure to follow these warnings and instructions could result in serious injury or death.

- Do not modify any components of the Fenders Kit.
- Check the Fenders Kit components for damage or discoloration over time. Do not use any Fenders Kit components if any part is broken or showing signs of deterioration and contact your Trek dealer for a replacement.
- If you remove any bolts, clean them using isopropyl alcohol and apply threadlocker to the threads during reinstallation.
- If a bolt has loosened, retighten it t to the indicated torque.

IMPORTANT: Trek recommends a rear fender be installed if you have passengers on the rear cargo area.

In the box

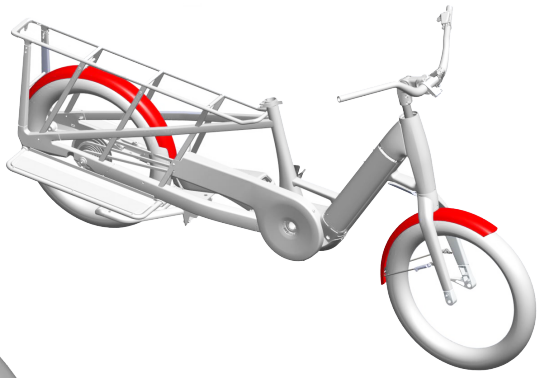

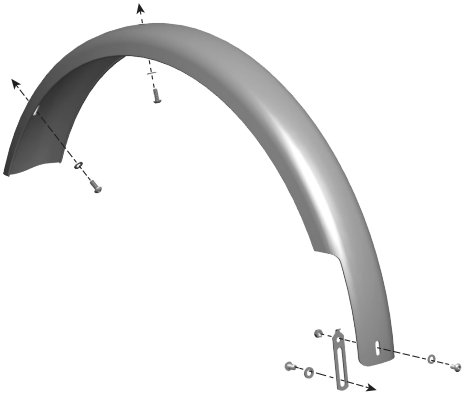

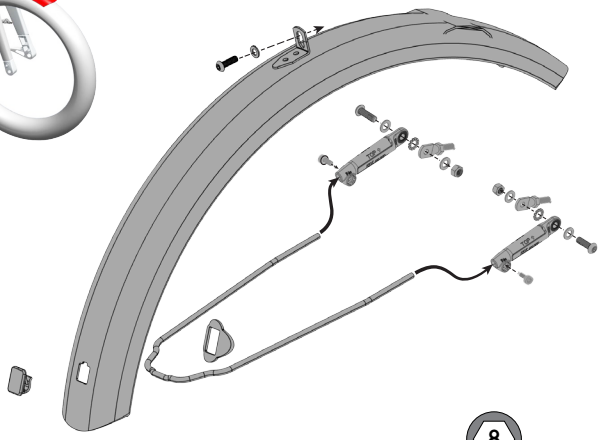

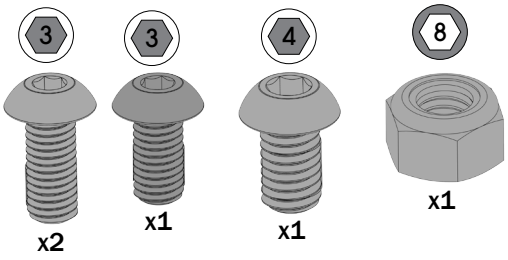

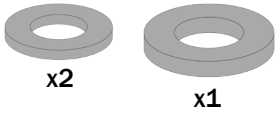

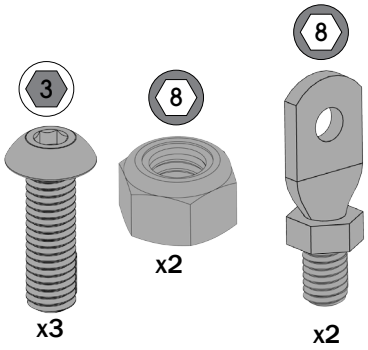

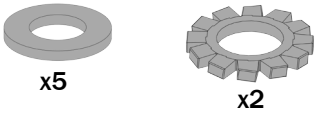

Tools required

Hex bits: 2.5mm, 3mm, 4mm, 6mm

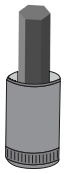

8mm wrench

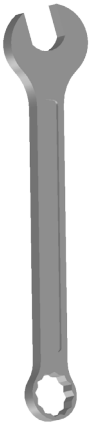

Torque wrench



Repair stand (optional)



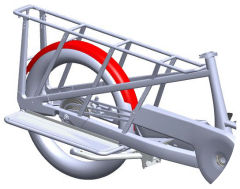

1

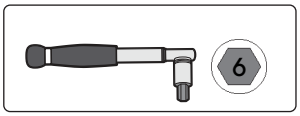

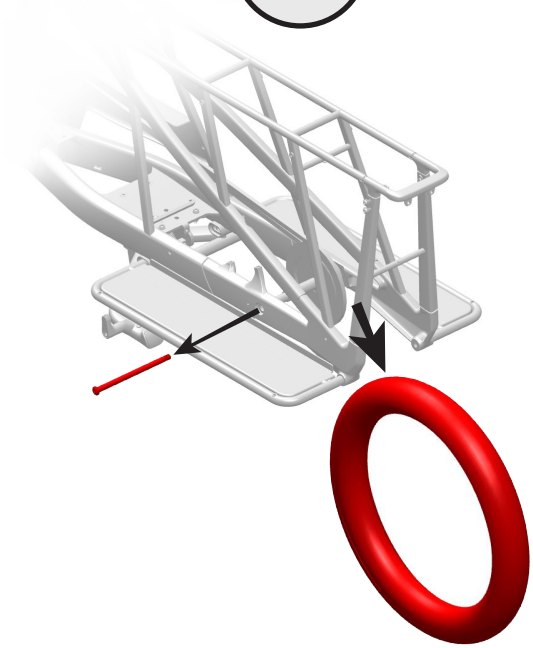

2

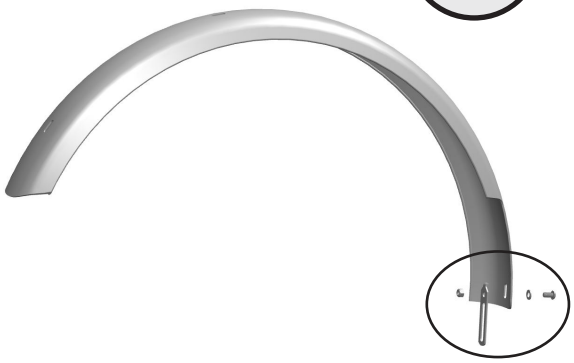

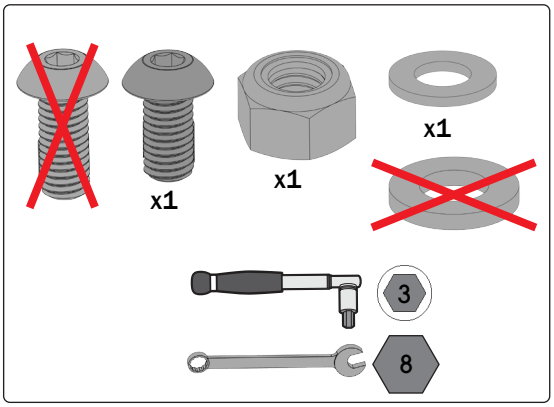

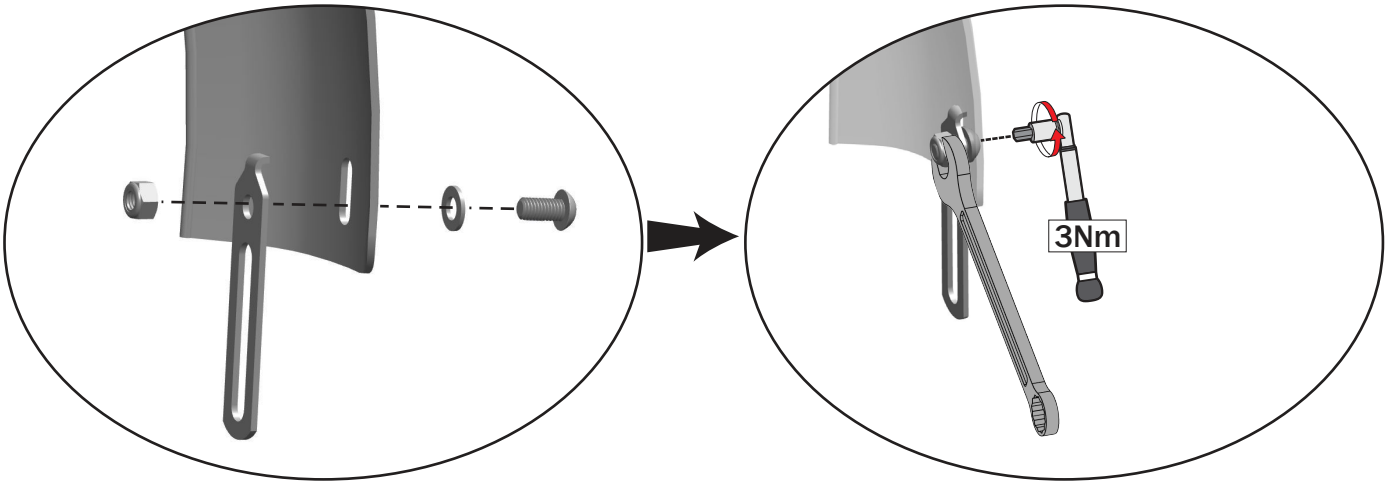

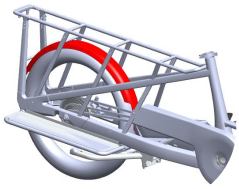

3



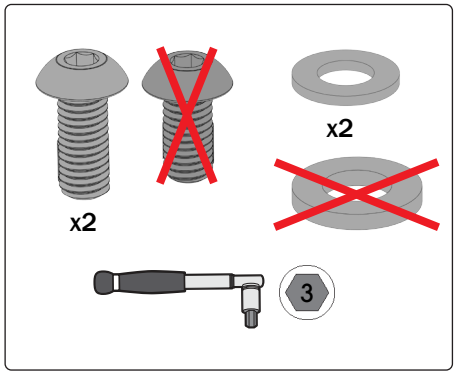

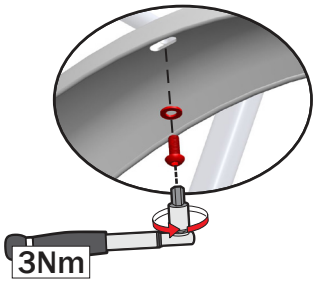

4

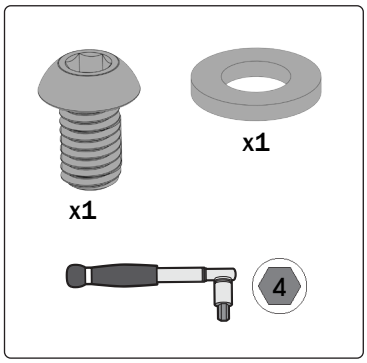

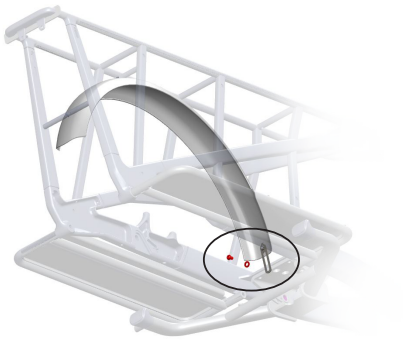

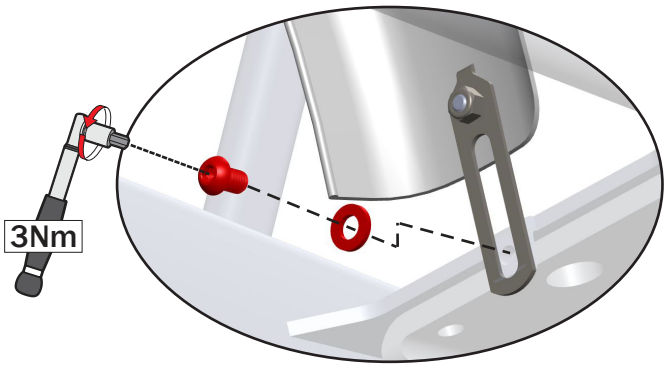

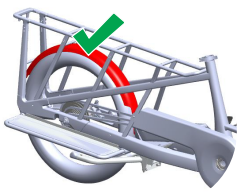

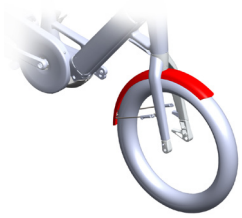

1

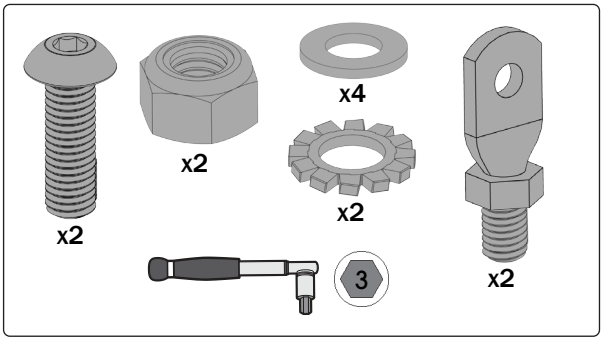
x4
x2
x2
x2
3
x2

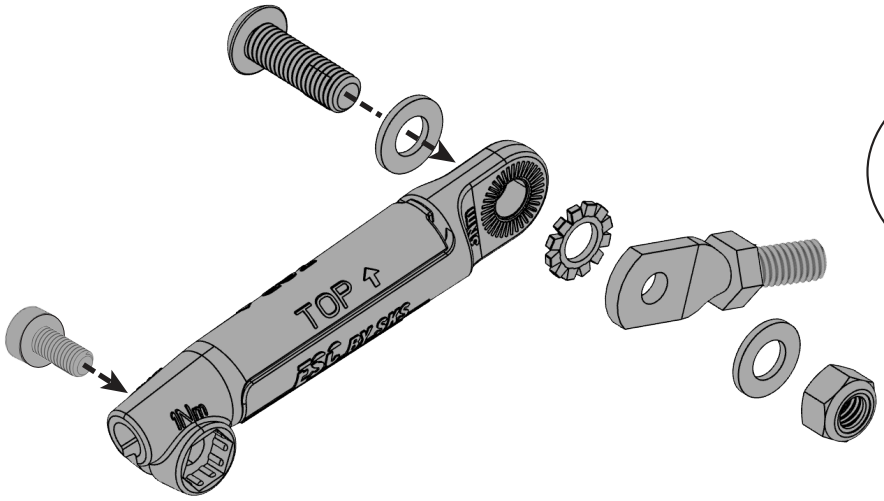
TOP
FSE BY SKS
iNm

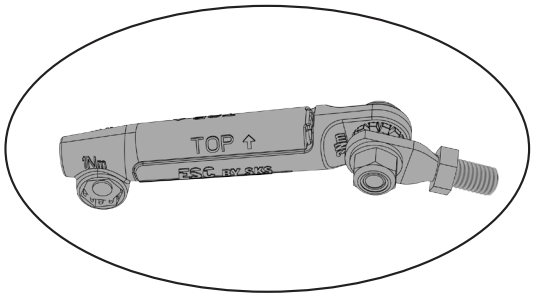
TOP
iNm

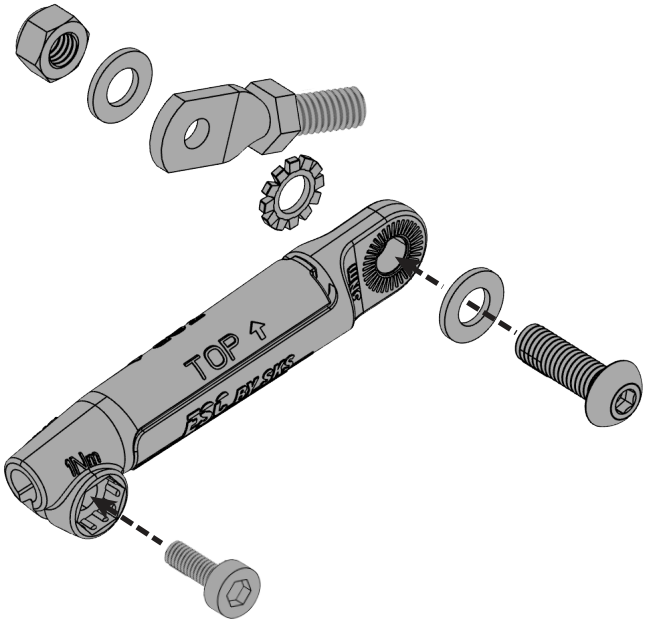
TOP
FSE BY SKS
iNm

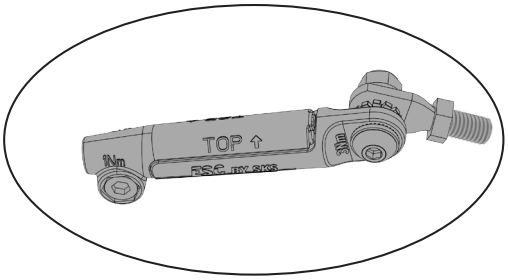
TOP
iNm

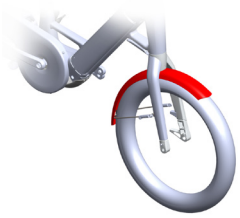

2

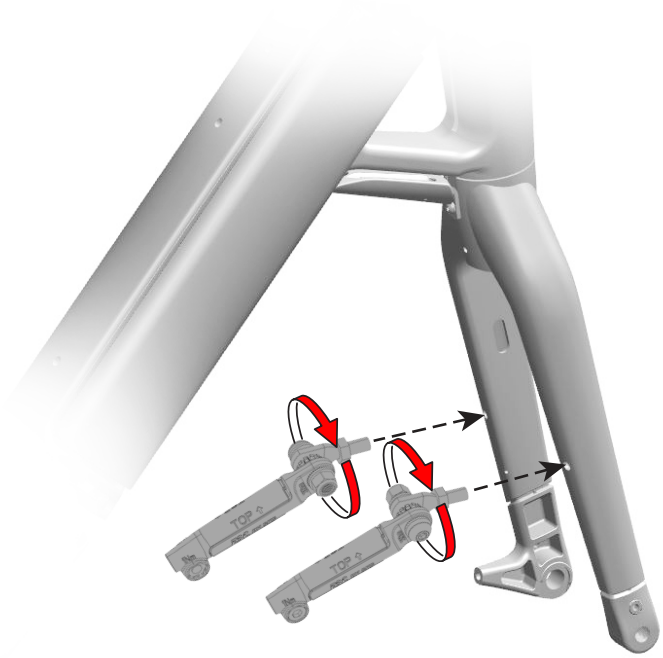

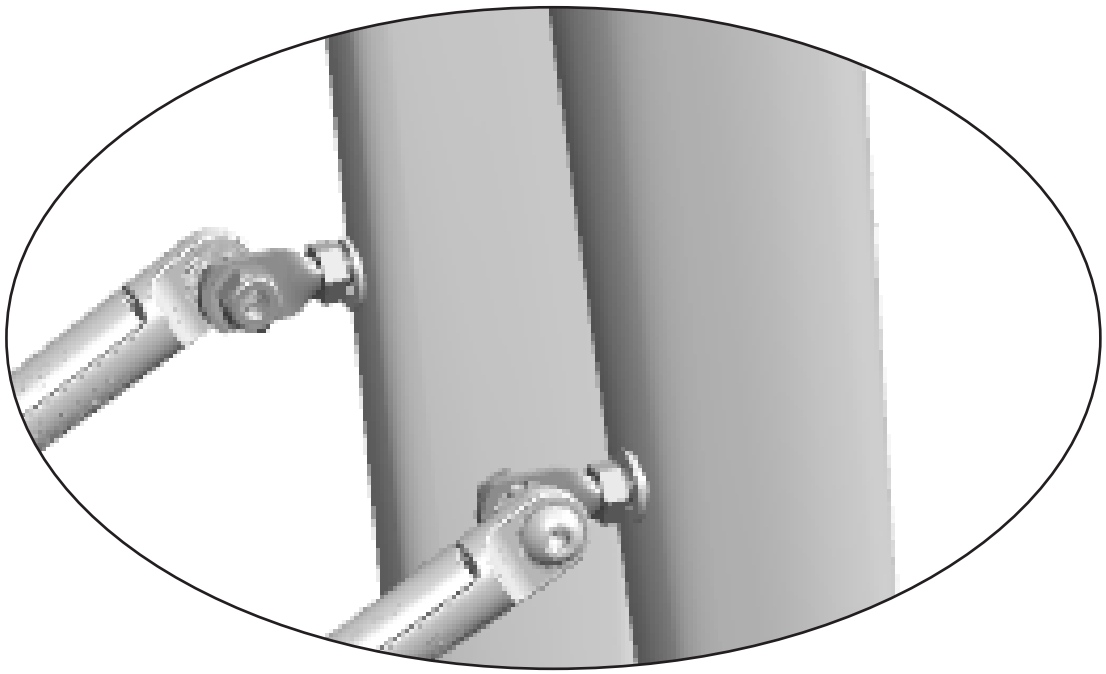

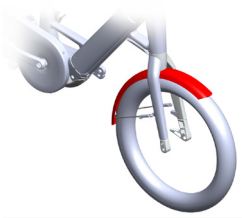

3

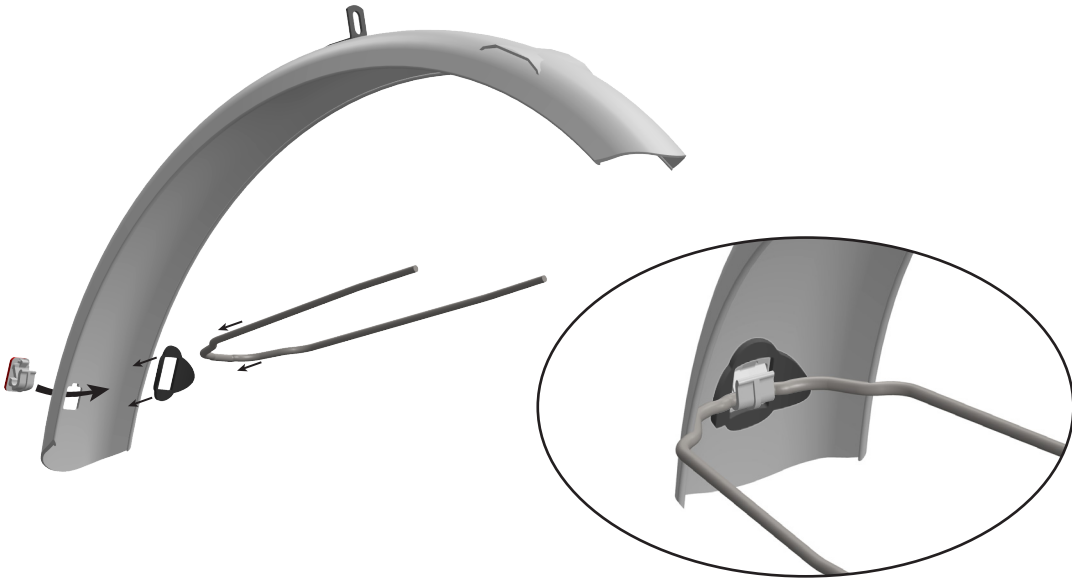

4

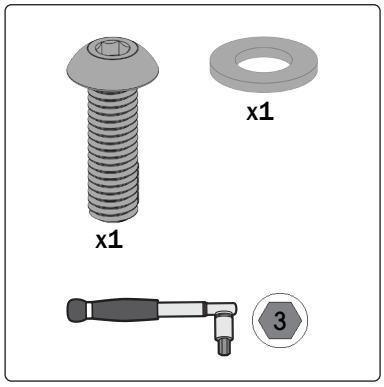

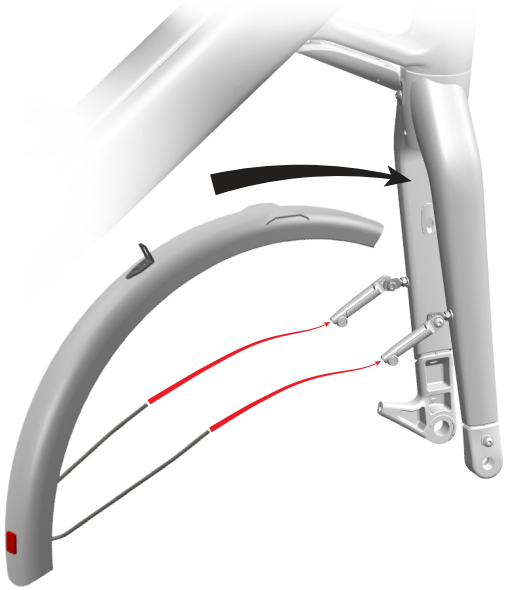

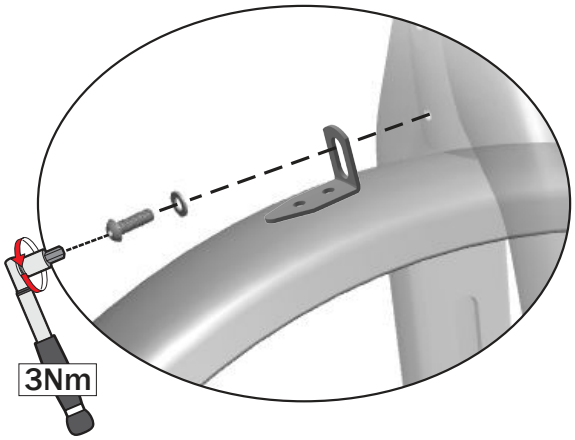



5

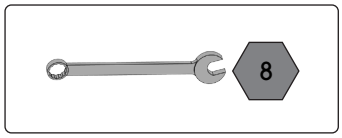

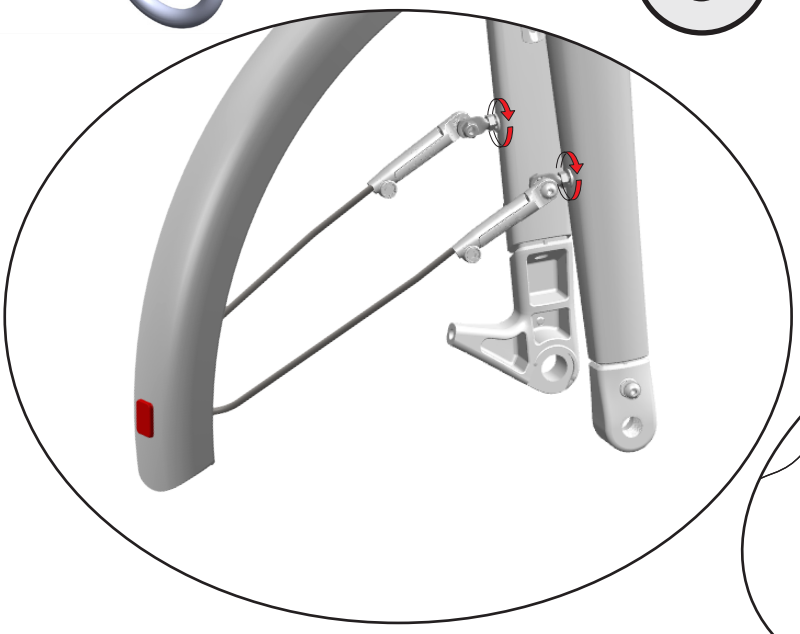

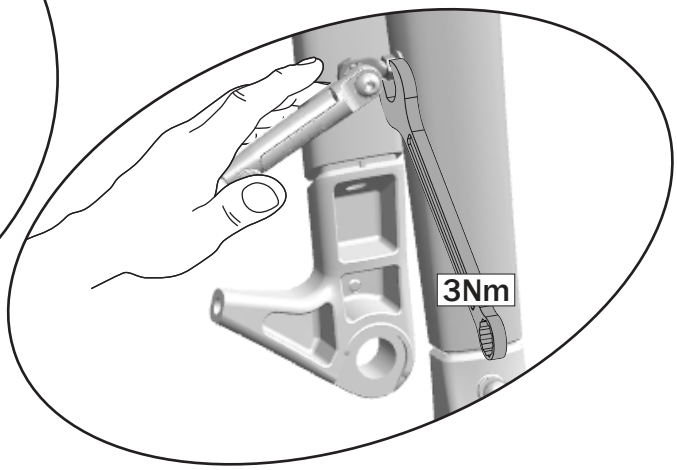

6

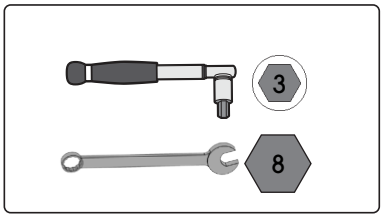

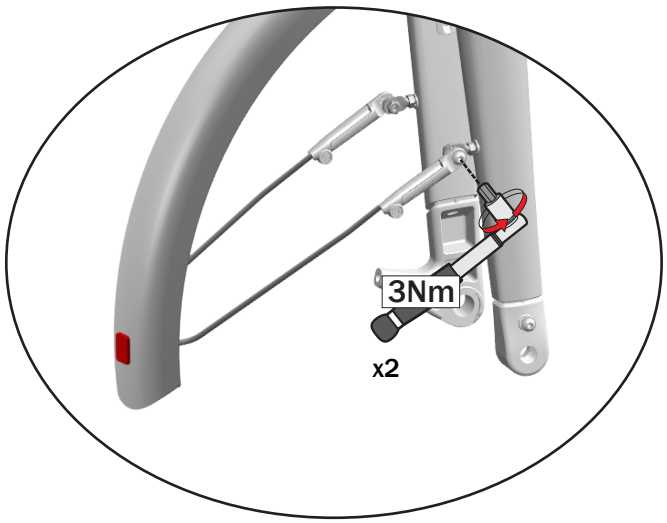

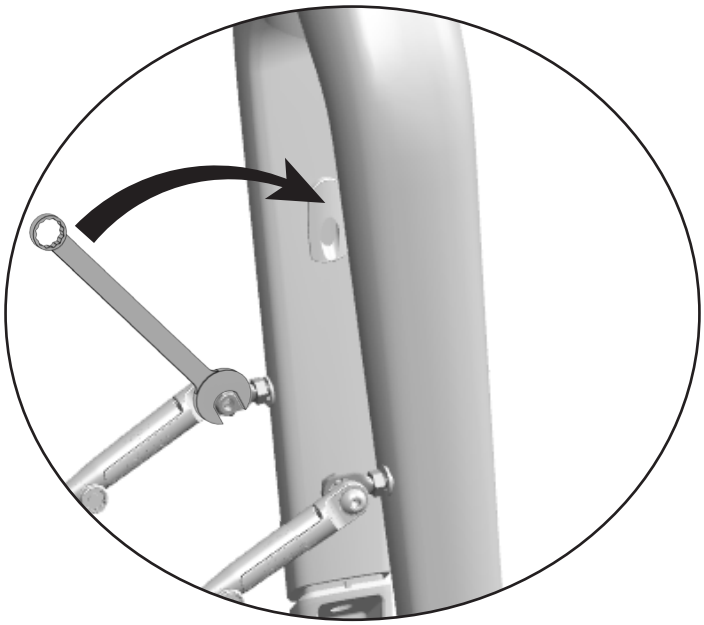



7

