

2023 DOMANE+ SLR

SERVICE MANUAL

Contents

Drivetrain
pages 3-6


Drive unit cover

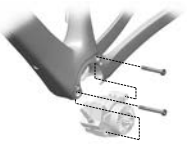
Drive unit


Lockring and cranks

Routing
pages 7-13


Di2 routing


eTap routing

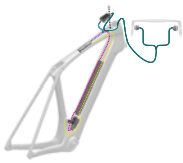
Remote, display, and Smart Box

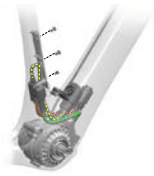
Wiring harness

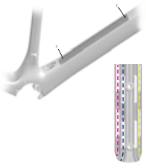
Cable tray

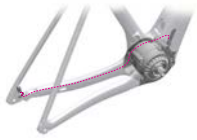
Speed sensor

Battery
pages 14-16


Battery mounts and charge level


Charge port cover


Remove/install the battery

Headset & Stem
pages 17-23


RCS stem: headset

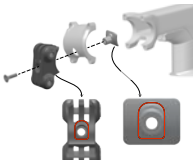
RCS stem: Blendr base

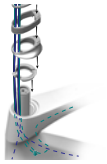
Install the headset


Install the headset

IsoSpeed
pages 24-27


Seatpost


IsoSpeed


Remove parts


Install parts

Frame & Specs
pages 28-30


Derailleur hangers

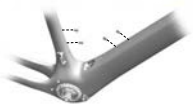
Frame



Specifications

Copyright 2024 Trek Bicycle Corporation All Rights Reserved

About this manual

Scope

This manual contains parts diagrams, specifications (such as grease and torque values), instructions, and helpful tips (such as the easiest direction to route cables).

This manual does not contain instructions on all components (such as brake calipers). Refer to the original manufacturer for more information.

Additional info

Additional manuals are available at Trekbikes.com/manuals.

- Owner's Manual — comprehensive instructions that come with your bicycle
- TQ Systems E-bike Owner's Manual — detailed instructions on the e-system found under Electric bikes > 2023

Further instructions are also available at TQ-group.com.

Legend

Zip tie

Nm Torque value



Apply threadlocker



Apply appropriate grease

Safety

WARNING

Properly tighten hardware

Always tighten hardware to the specified torque. Over-tightening hardware could deform or break the hardware or components. Under-tightening hardware could cause hardware or components to become loose. Either situation could damage the bicycle and result in injury to the rider.

WARNING

Reapply threadlocker

All reused-fasteners with pre-applied threadlocker must be cleaned with isopropyl alcohol and have new threadlocker applied before re-assembly. If threadlocker is not applied, the fasteners may loosen which could damage the bicycle and result in injury to the rider.

Drive unit cover

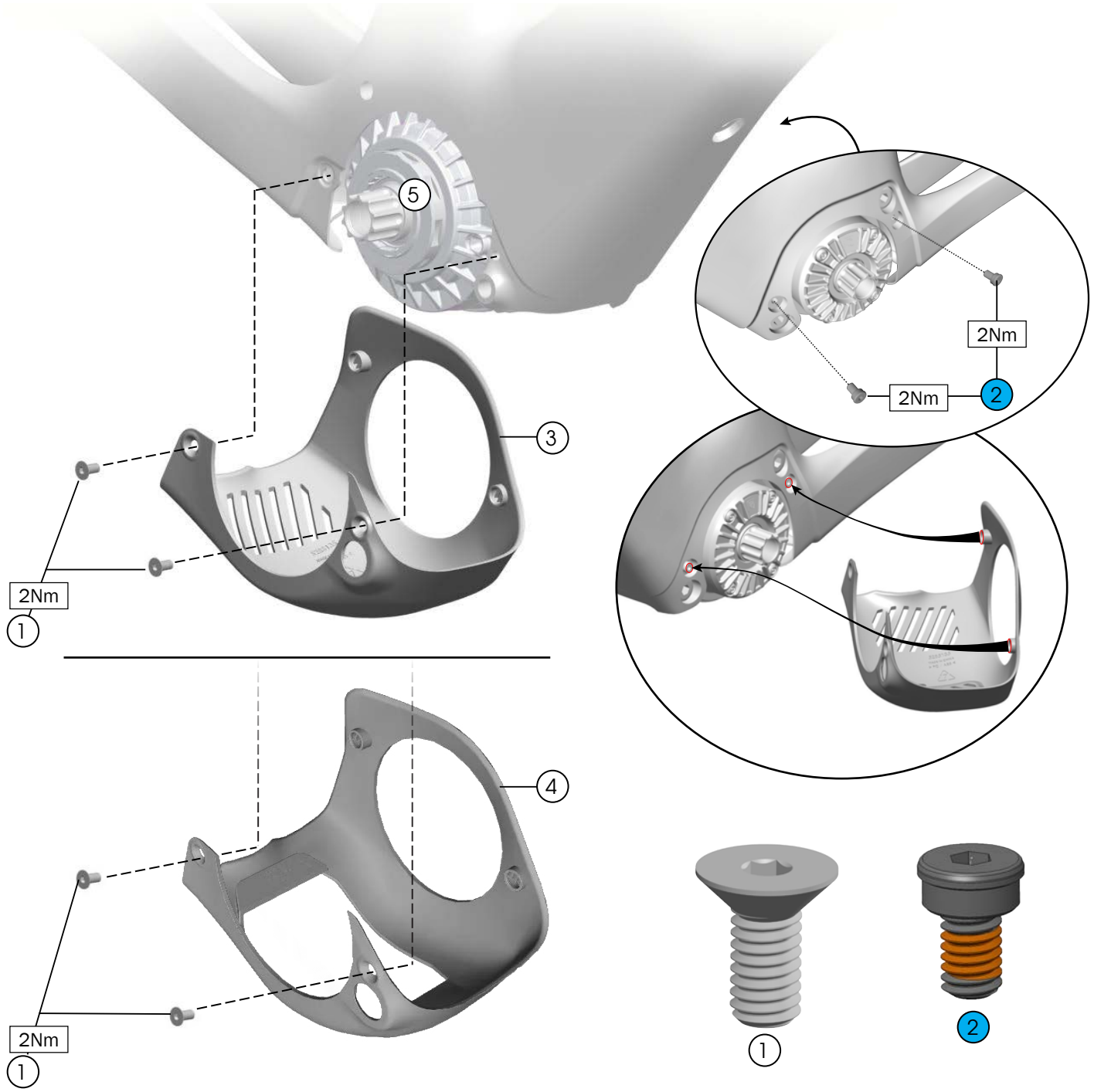

1. Bolts (M4x9mm) — *W546731*
2. Bolts (M4x6mm) — *W5285137*
3. HPR50 Drive unit cover (Deep Smoke)* — *W5297945*
4. HPR60 Drive unit cover — *5342045*
5. Motor
   - HPR50 — *5305787*
   - HPR60 — *5343943*

**This is a color-matched part — search trekbikes.com to find the right color for your bike.*

Drive unit

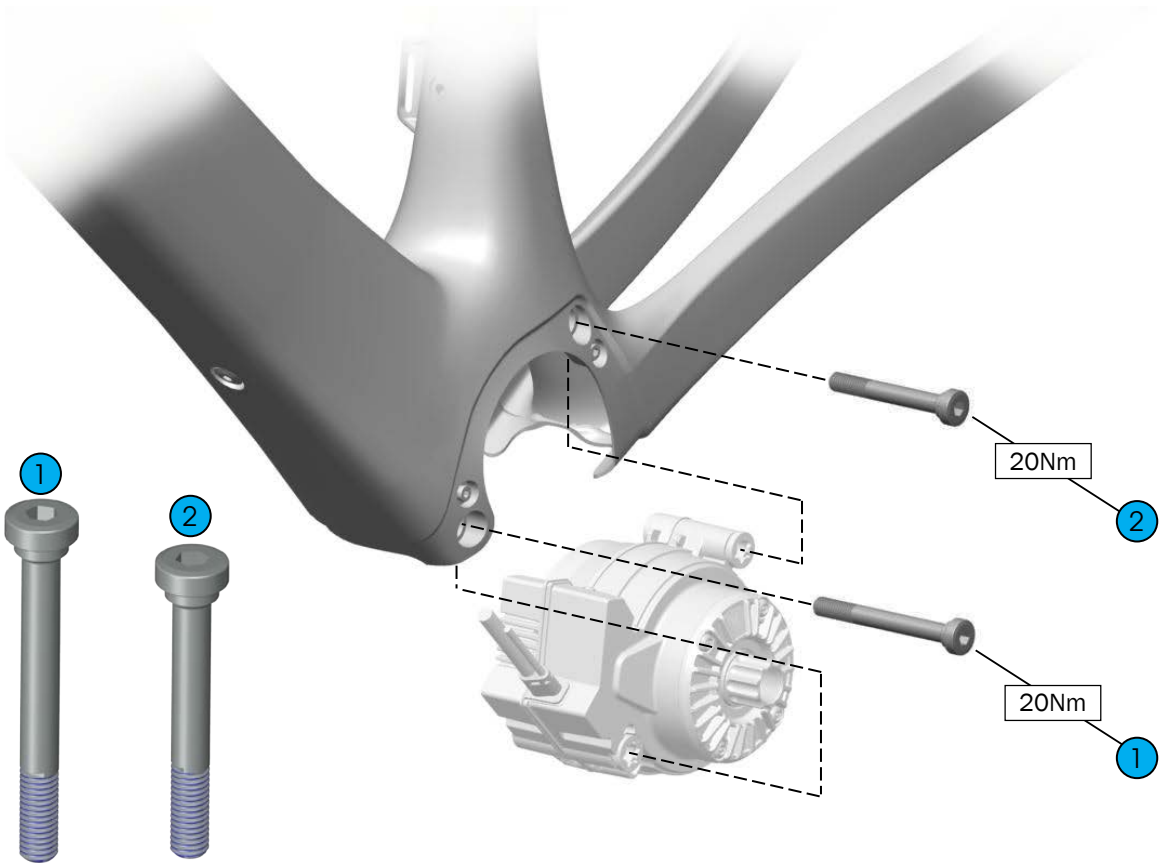

1. Front bolt (73mm)
2. Rear bolt (62mm)

5289570

3. Compensation screws, T55

Remove the drive unit

Before removing the drive unit from the frame, grab the connectors and unplug the speed sensor and drive unit cables.

NOTICE: Unplug the speed sensor by the connector — not the cable itself — or you may damage the cables.

NOTICE: Do not carry the drive unit by the cables. This can damage the internal wiring.

Compensation screws

NOTE: Only adjust the compensation screws if you are replacing the drive unit.

Before mounting a replacement drive unit, adjust the compensation screws (tighten or loosen) to match the frame as shown below.

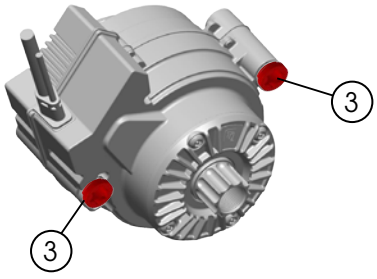

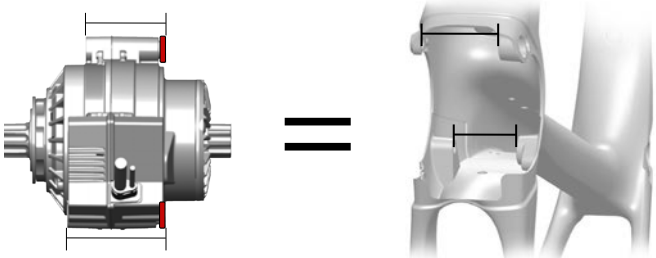

Lockring and cranks

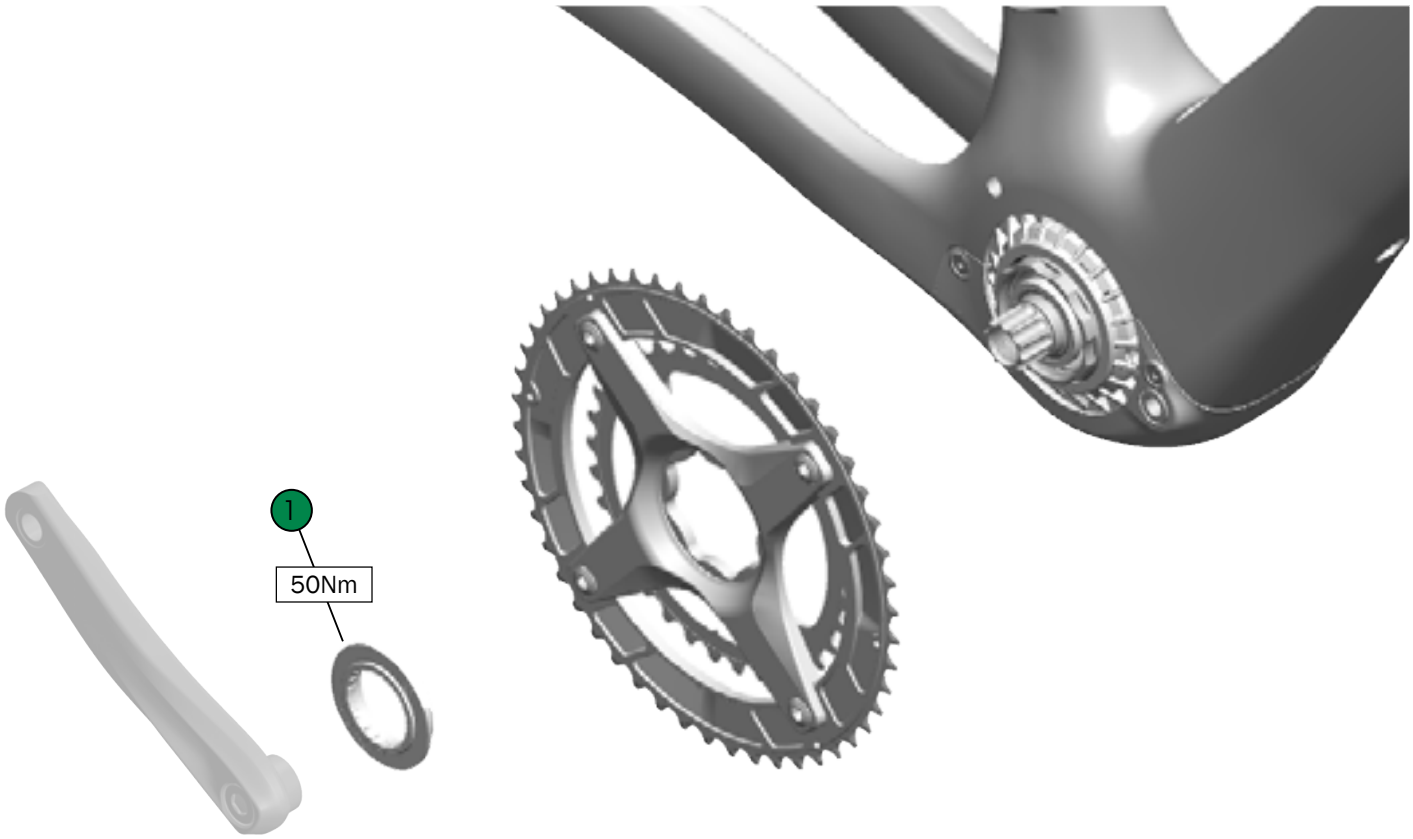

1. Lockring
2. *Lockring sleeve

5289572

3. Spacer (2x chainrings only) — *W5309530*

**Used for lockring installation only*

Lockring sleeve

Use the lockring sleeve to install the lockring. Remove it after assembly.

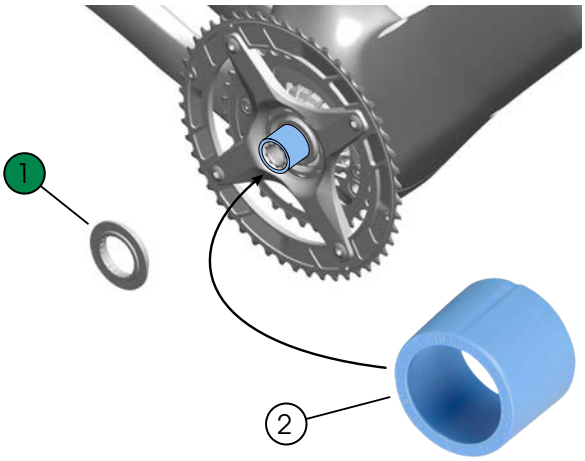

Additional spacer

This spacer may be required for proper adjustment of the front derailleur.

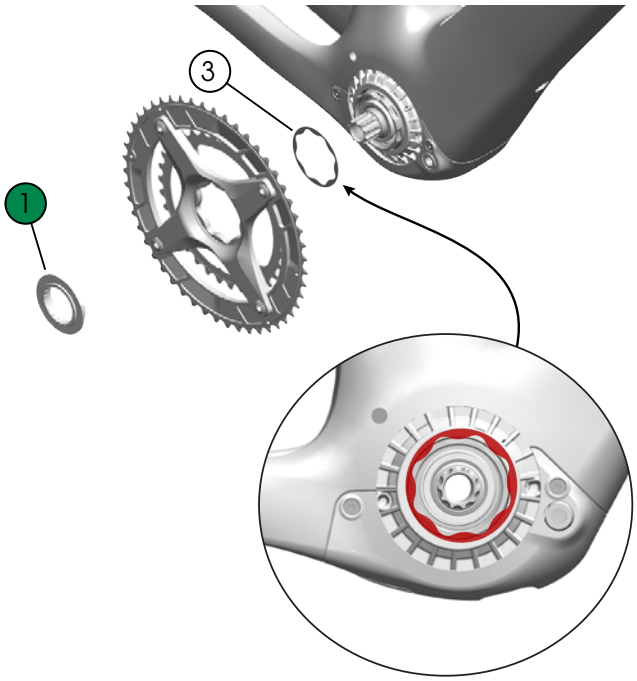

Drivetrain

Install the lockring

1. Place the protective sleeve (2) over the bottom bracket spindle.

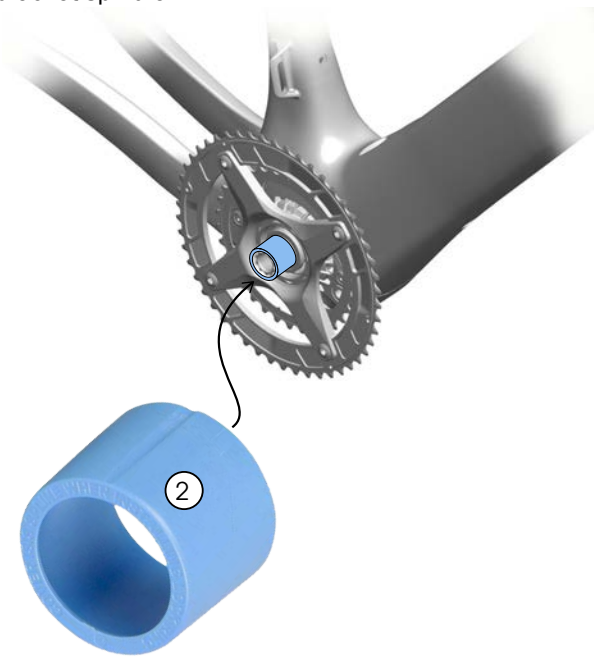

2. Grease the lockring (1) as shown below.

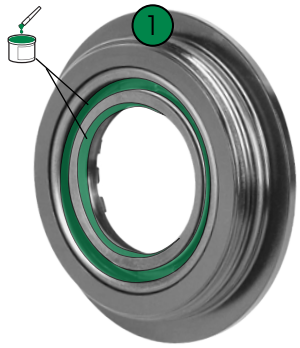

3. Install the lockring (1) and tighten it to 50Nm.

   NOTICE: Failure to use the protective sleeve (2) could damage the seal on the lockring and allow water to damage the drive unit.

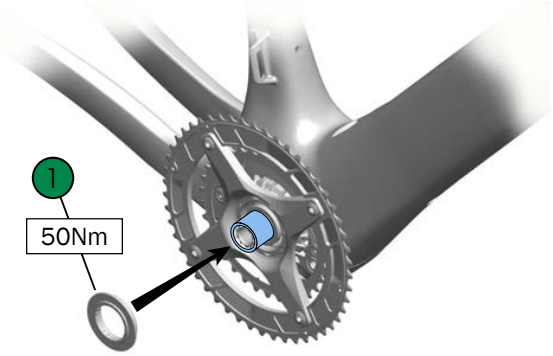

Install the cranks

Align the indents on the bottom bracket spindles with the crank orientation (like the hands on a clock).

IMPORTANT: If you do not align the cranks as shown below, the drive unit will not run properly.

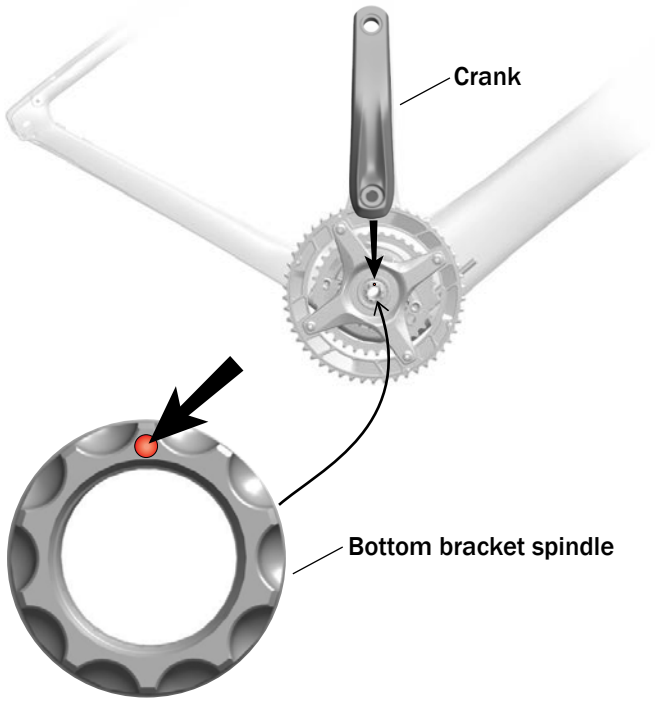

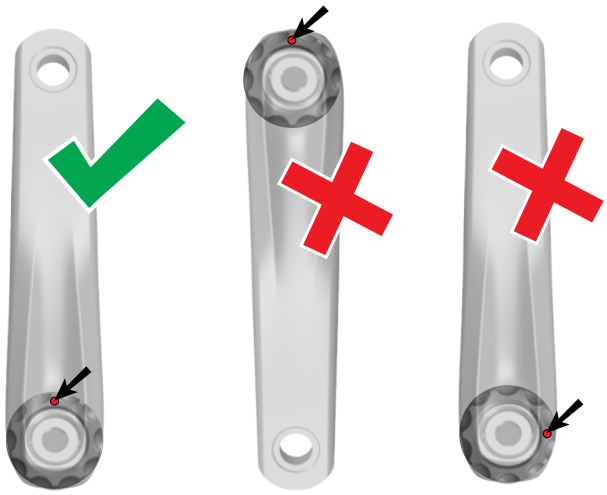

Di2 routing (powered by the seatpost Di2 battery)

NOTE: If the derailleurs are powered by a Di2 battery in the seatpost, you will be able to shift gears with the e-system turned off.

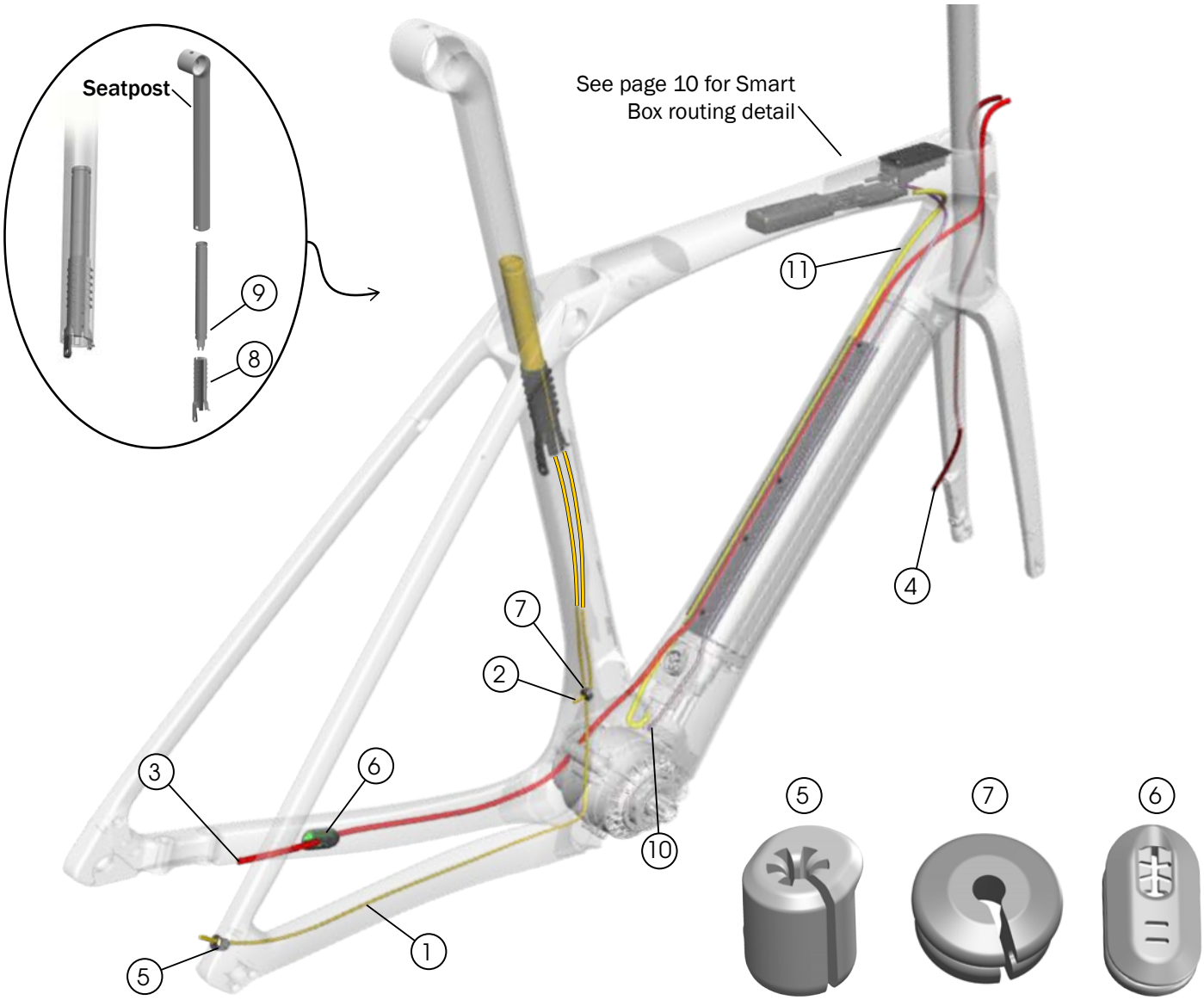

1. Rear Di2 wire
2. Front Di2 wire

**EW-SD300-I (Shimano)*

3. Rear brake hose
4. Front brake hose
5. Rear Di2 wire grommet — *W317292*
6. Housing grommet — *W330578*
7. Front Di2 wire grommet — *W440697*
8. Di2 battery holder — *W5290297*
9. Di2 battery — **BTDN300 (Shimano)*
10. **eShift cable — *5289565*
11. Wiring harness cable — *5289574*

***This wire is intentionally not connected to a component in the seat tube. It is routed for additional electronics integration.*

Di2 routing (powered by the e-system battery)

NOTE: If the derailleurs are powered by the e-system battery (instead of a Di2 battery), the e-system must be turned on to shift.

NOTE: If the e-system battery runs out of power during a ride and shuts off, it will still have enough power to shift for a limited time.

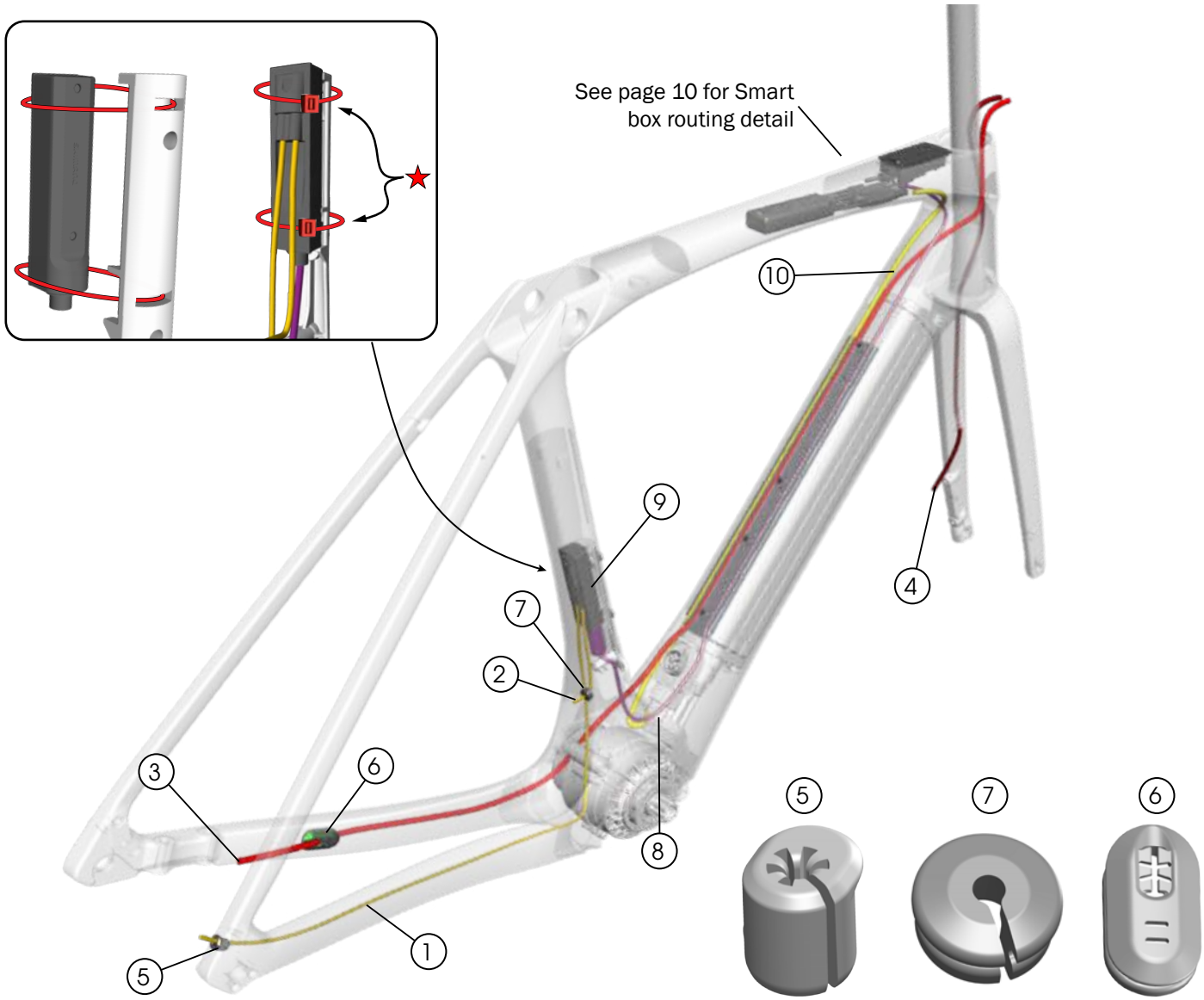

1. Rear Di2 wire
2. Front Di2 wire

**EW-SD300-I (Shimano)*

3. Rear brake hose
4. Front brake hose
5. Rear Di2 wire grommet — *W317292*
6. Housing grommet — *W330578*
7. Front Di2 wire grommet — *W440697*
8. eShift cable — *5289565*
9. CAN bus — **EW-EX310 (Shimano)*
10. Wiring harness cable — *5289574*

eTap routing

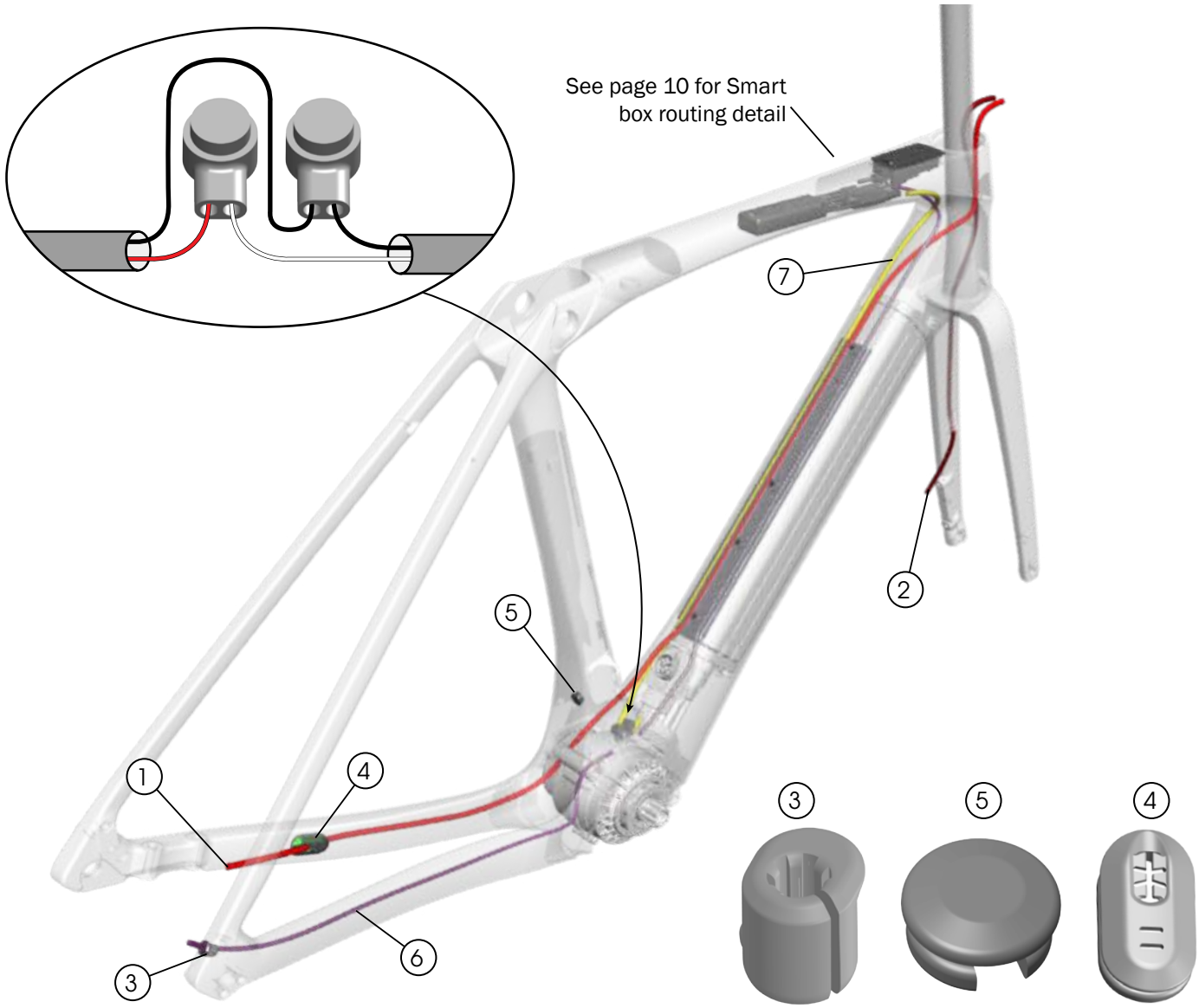

1. Rear brake hose
2. Front brake hose
3. Rear wire grommet — *329119*
4. Housing grommet — *W330578*
5. Front hole plug — *W440699*
6. eShift cable — *5289566*
7. Wiring harness cable — *5289574*

Remote, display, and Smart Box

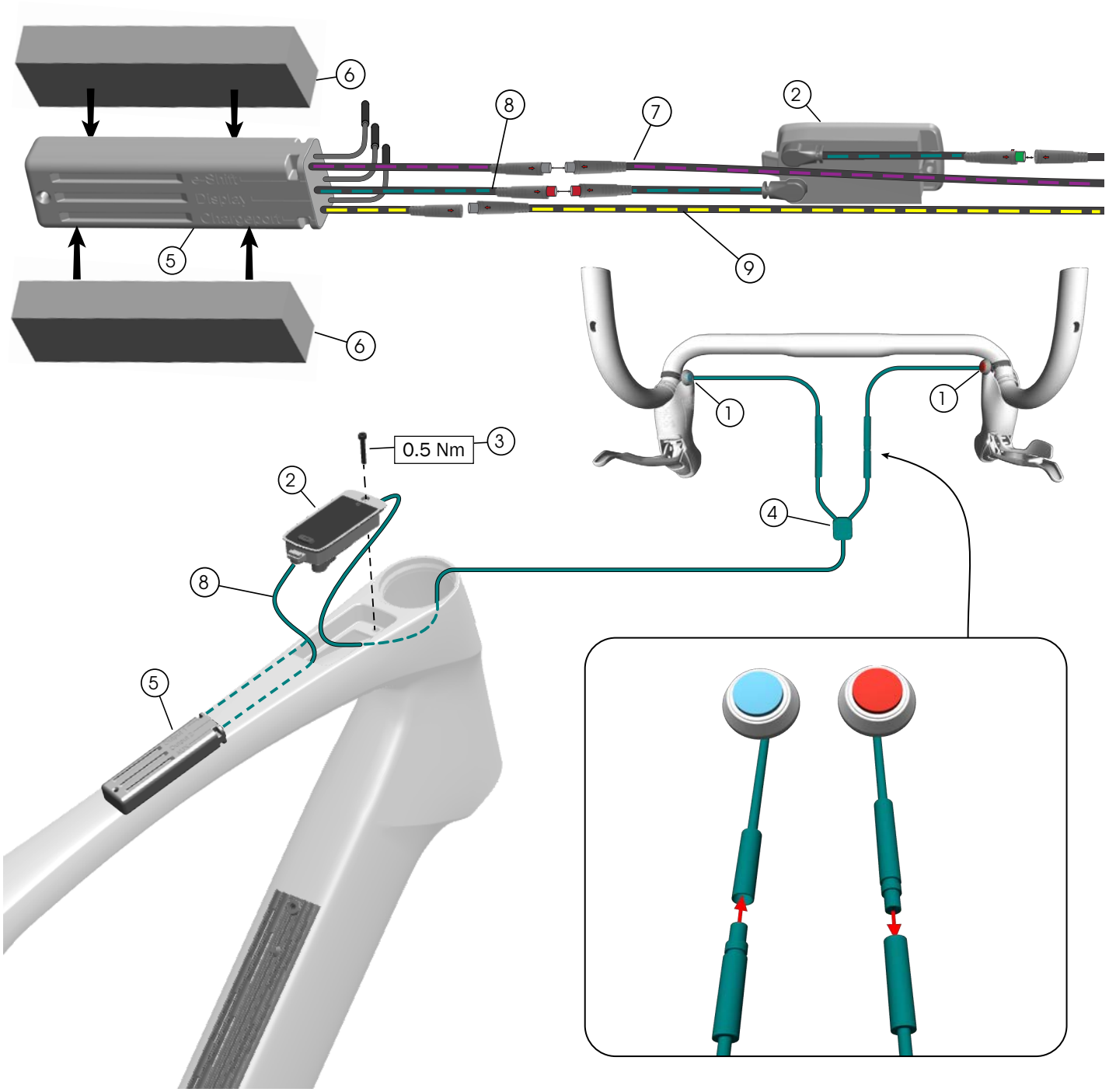

1. Remote assist buttons — *W5315683*
2. Display
3. Bolt, T10 (M3x20mm)

   — *5289562*
4. Cable y-splitter — *W5286202*
5. Smart box — *5289564*
6. Foam blocks — *5305634*
7. eShift cable — *5289566*
8. Display cable
9. Wiring harness cable — *5289574*

Wiring harness

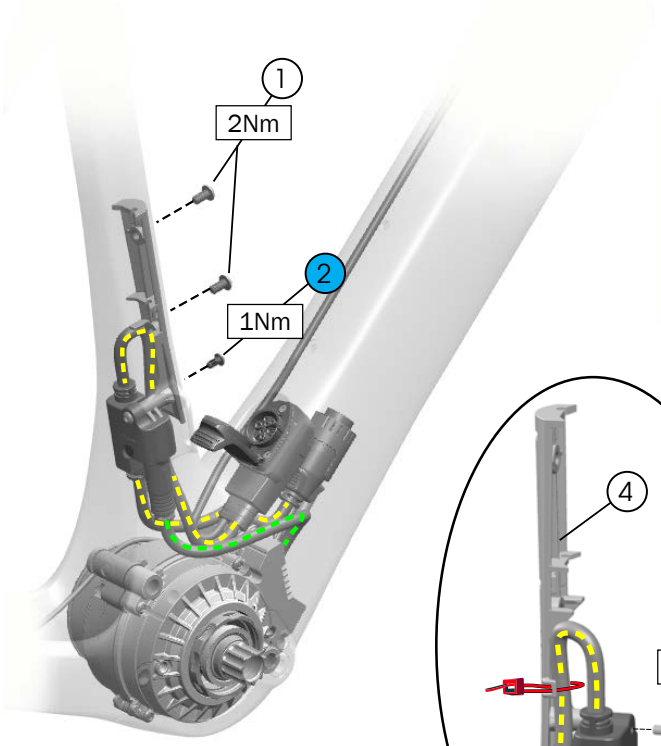

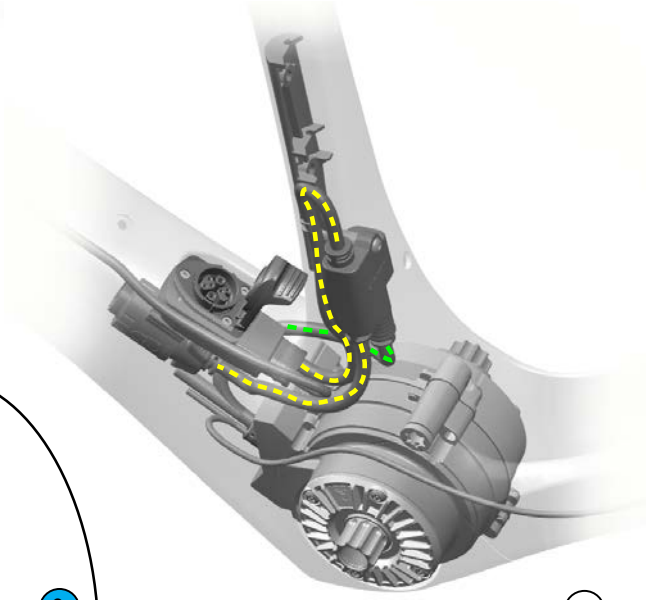

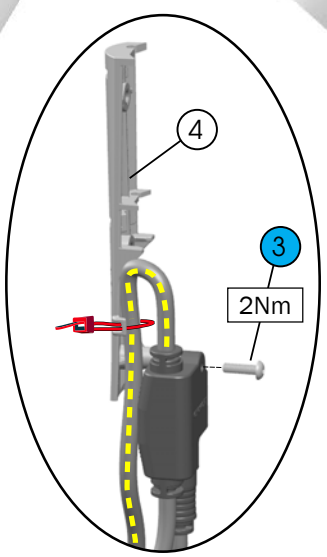

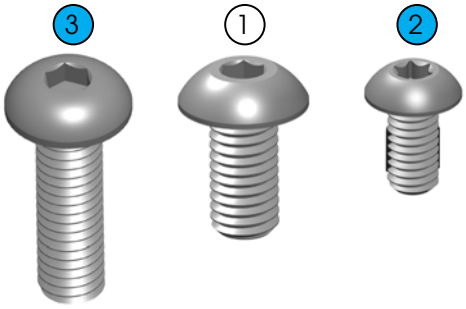

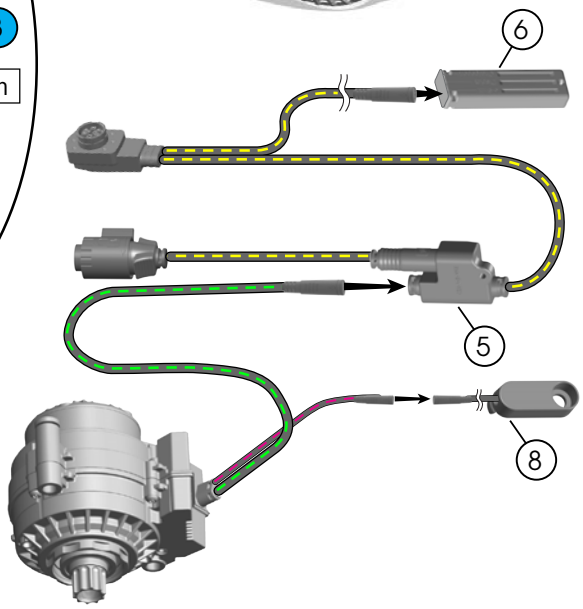

1. Bolts (M5x10mm) — *W1052364*
2. Bolt (M4x10mm) — *W549305*
3. Bolt (M4x14mm) — *W5291775*
4. CAN bus housing — *W5285129*
5. Wiring harness — *5289574*
6. Smart box — *5289564*
7. Cable connection tool — *W5304531*
8. Speed sensor — *W5285131*

Cable connection tool

Use the cable connection tool (sold aftermarket) to remove the plugs from the battery and wiring harness (5).

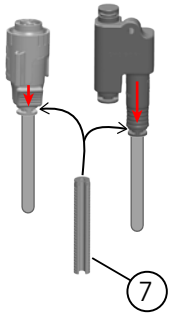

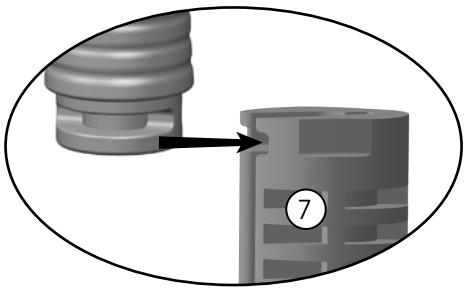

Cable tray

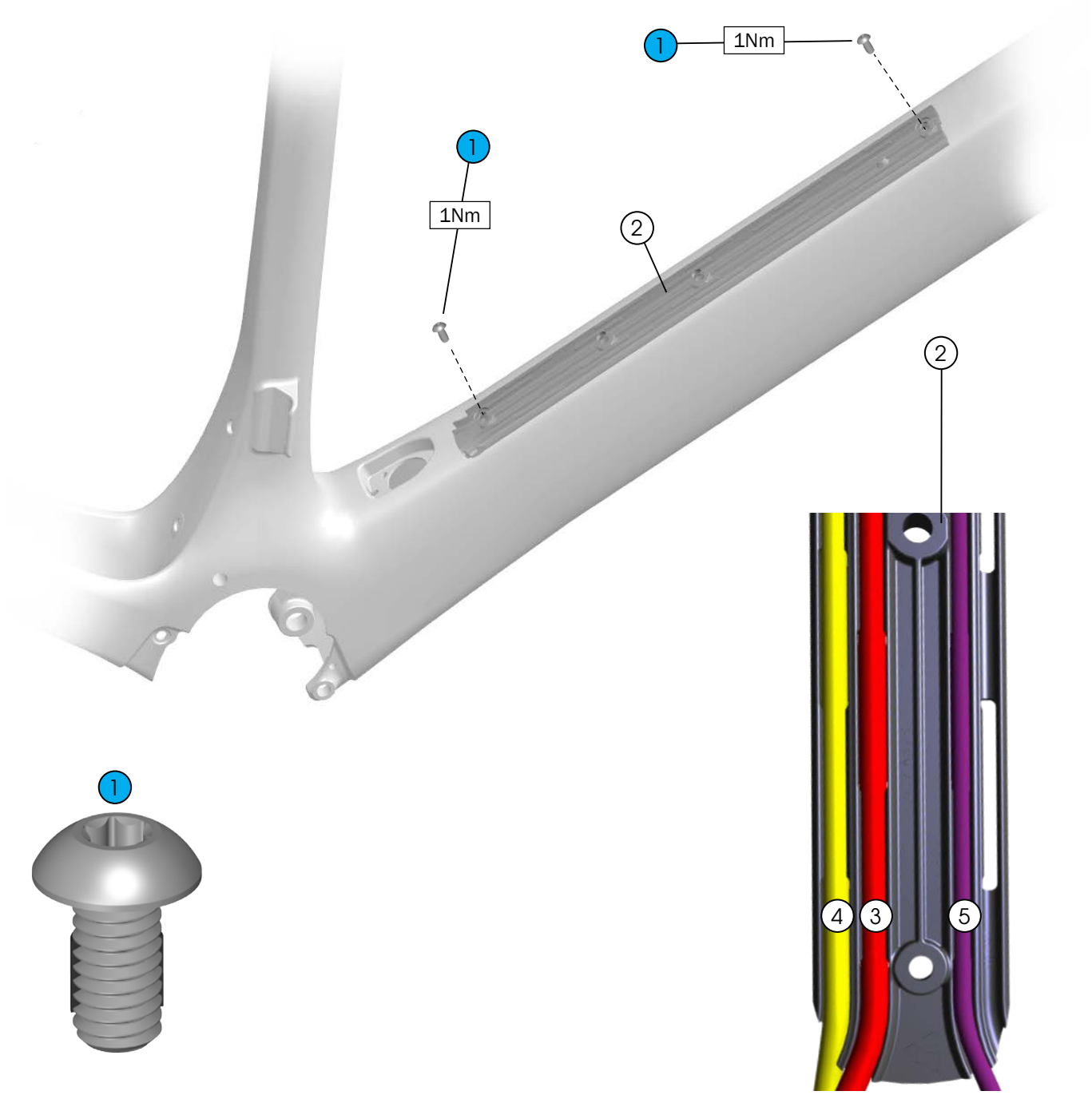

1. Bolts (M4x10mm) — *W1052364*
2. Cable tray — *W5285128*
3. Brake hose
4. Wiring harness — *5289574*
5. eShift wire

Speed sensor

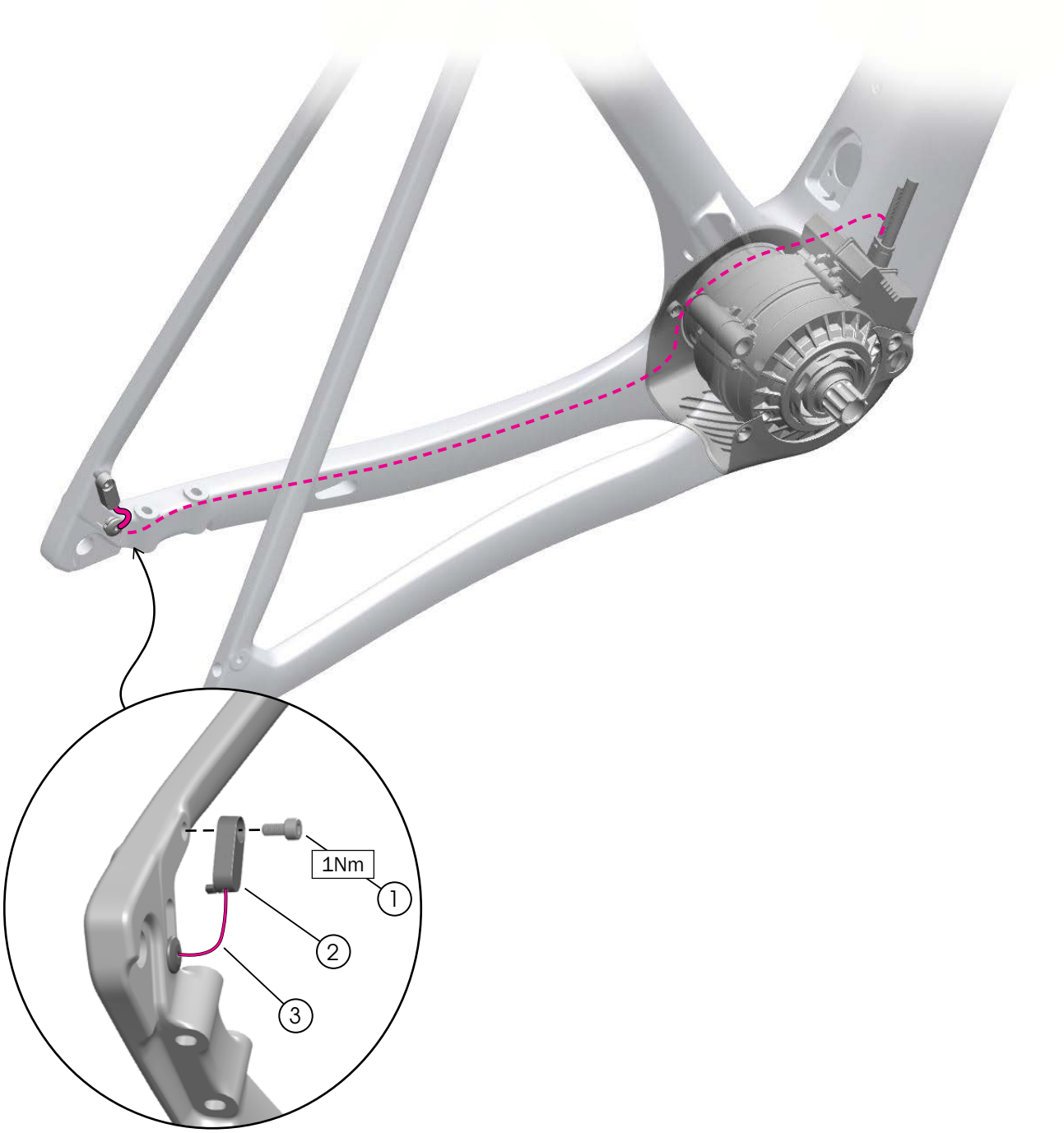

1. Bolt (M4x8mm) — *W562831*
2. Speed sensor
3. Speed sensor wire

W5285131

Battery mounts and charge level

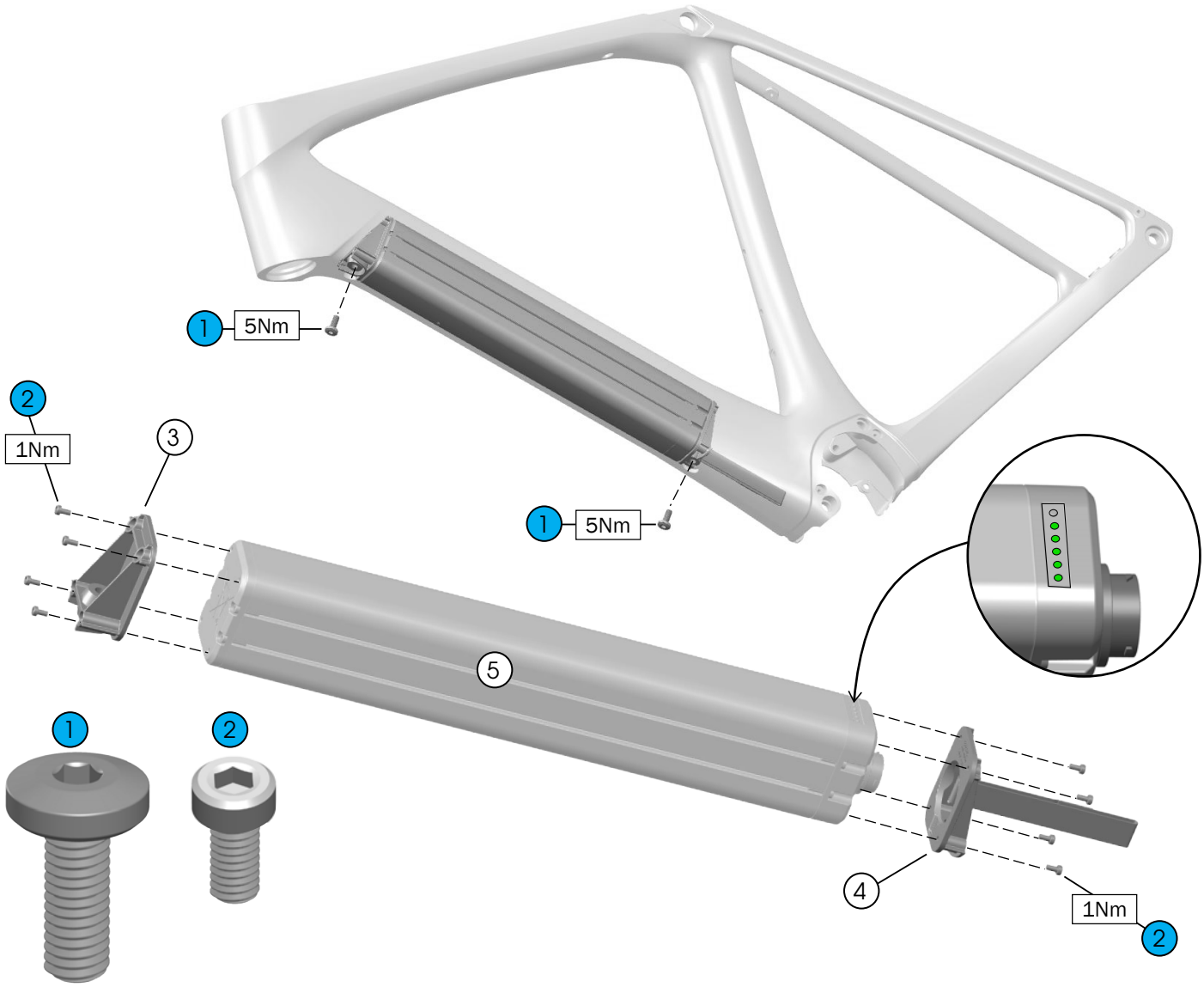

1. Battery mount bolts (M6x20mm) — *W5275266*
2. Bolts, T10 (M3x6mm) — *W581747*
3. Upper bracket — *W5285132*
4. Lower bracket — *W5285133*
5. Battery — *5289554*

Charge level

The LEDs on the battery indicate the charge level (each LED represents 20% of the battery charge). To view the charge level with the battery removed, cover the light sensor for a few seconds with your finger, then remove.

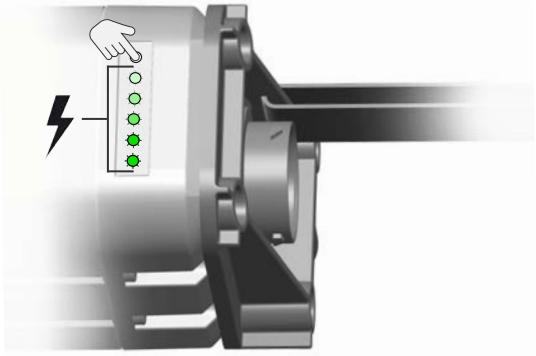

Charge port cover

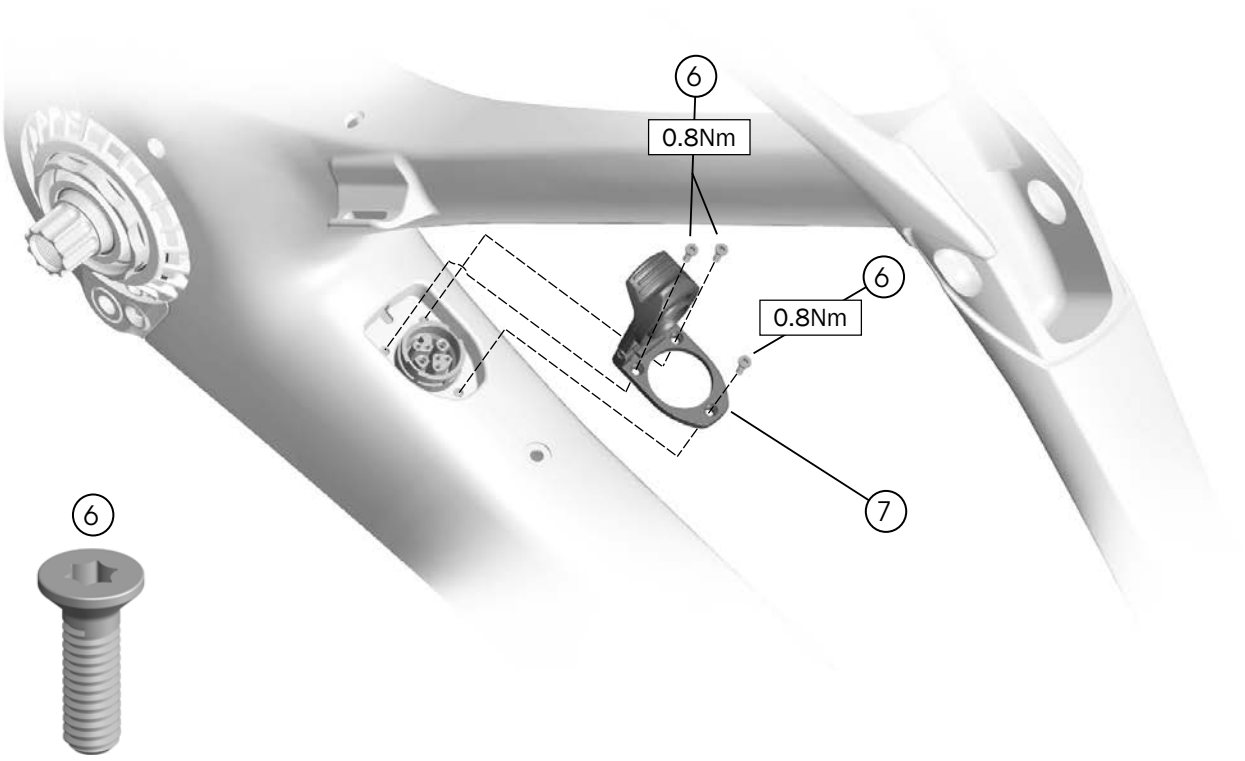

6 Bolts, T8 torx-drive (M2.5x8mm)

7 Charge port cover

5289578

Replacing the charge port cover

To replace the charge port cover, you may need to remove the drive unit (see page 4) to reach the charge port and hold it in place.

Battery

Remove the battery

1. Remove the drive unit cover, drive unit assembly, charge port cover, and charge port.

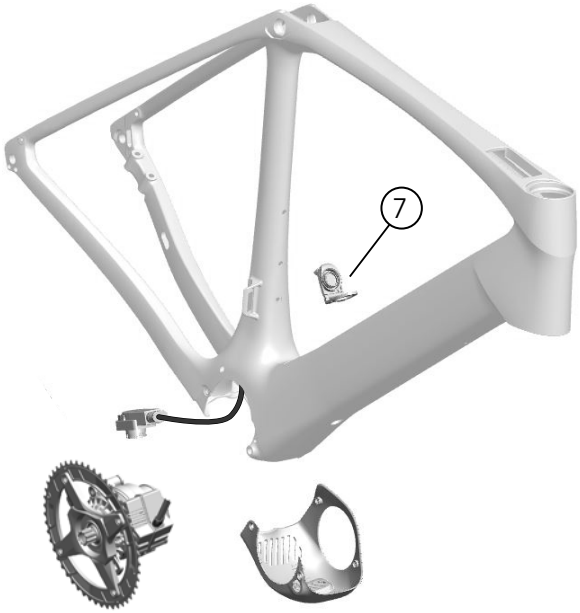

2. Remove the battery mount bolts (1).

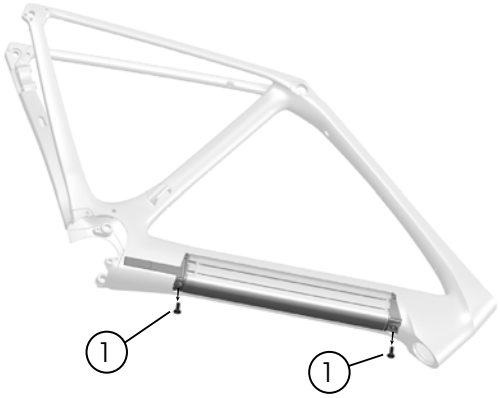

3. Use the fabric battery loop to pull out the battery slightly so you can reach the battery connector.
4. Rotate the battery connector counter-clockwise and pull out the battery.

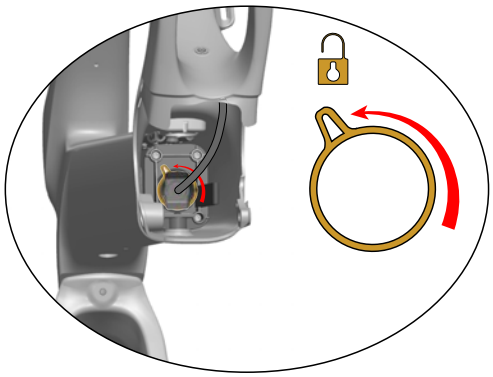

Install the battery

1. Use the battery mount bolts (1) to install the battery.

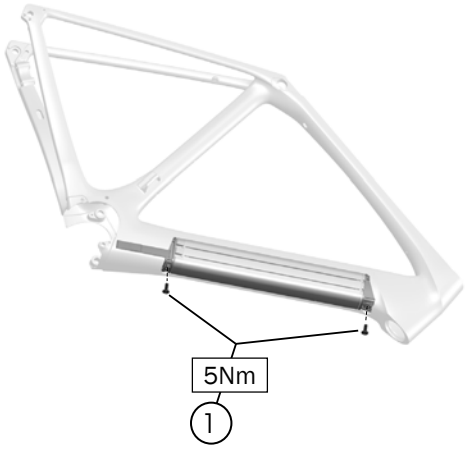

2. Install the charge port cover (7) and charge port.

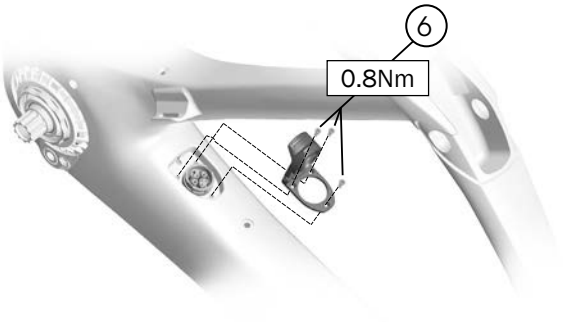

3. Insert the battery connector into the battery until you hear a “click” sound.

   TIP: Use the cable connection tool (see page 11).

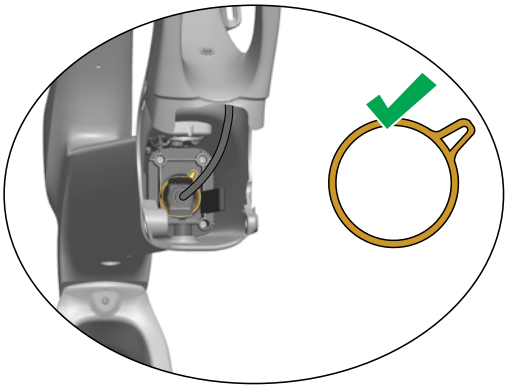

RCS stem: headset

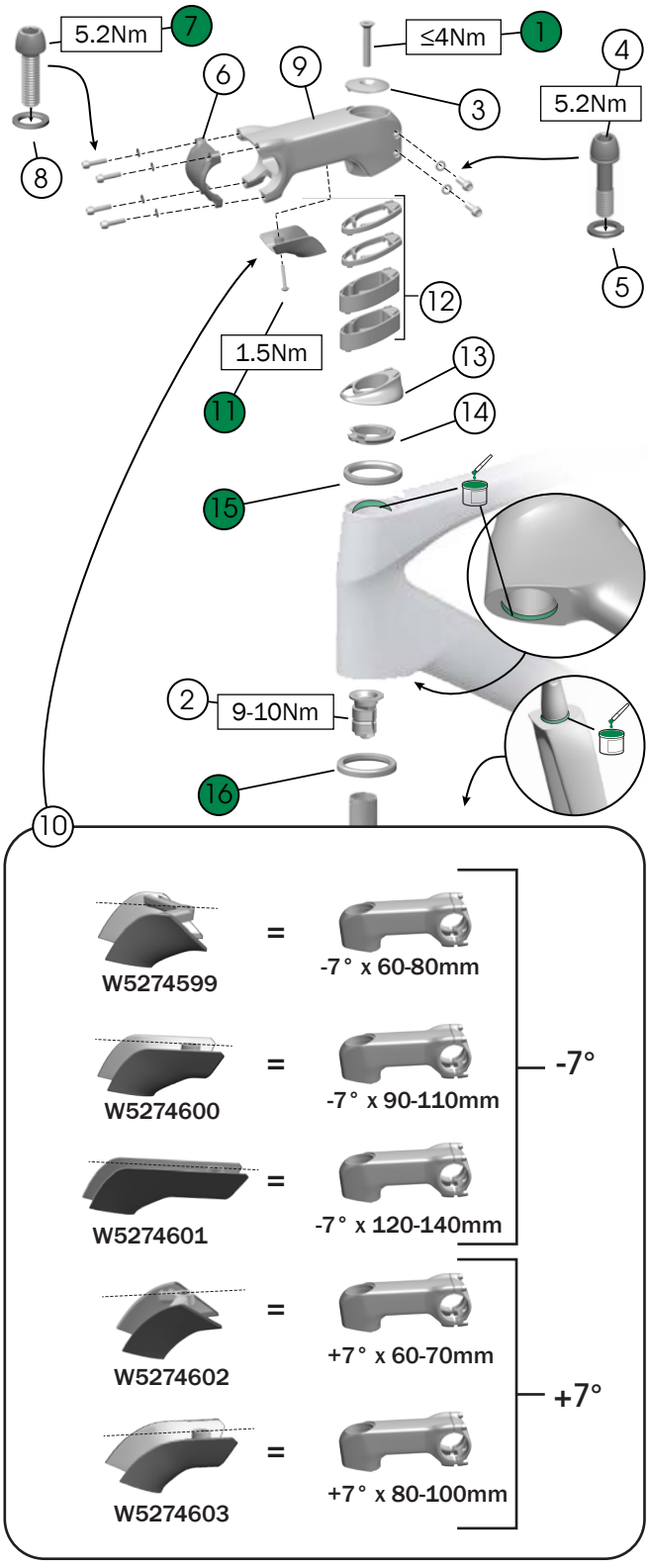

1	Top cap fastener (M6x35mm)	*W547432*
2	Compression plug	
3	RCS top cap — *W5274966*	
4	Stem fasteners (M5x15mm)	*5274584*
5	Washers (M5)	
6	Faceplate	
7	Faceplate fasteners	
8	Washers	
9	Stem (-7°, 100mm)	
10	Routing cover (-7°, 90-110mm) — *W5274600*	
11	Fastener (M4x25mm) — *W5274963*	
12	Spacers	5mm — *5296906* 15mm — *5296905*
13	Bearing cover — *W5274267*	
14	Split ring — *W5274269*	
15	Upper headset bearing	*W540243*
16	Lower headset bearing	

RCS stem: spacers

The steerer tube is cut at the height for exactly 40mm of headset spacers. If you remove spacers below the stem, you must add the same height spacers above the stem.

> **WARNING**
>
> Do not exceed 40mm of headset spacers above or below the stem. If there are more than 40mm of spacers, the steerer tube could become damaged and break, causing a crash resulting in injury.

Below the stem

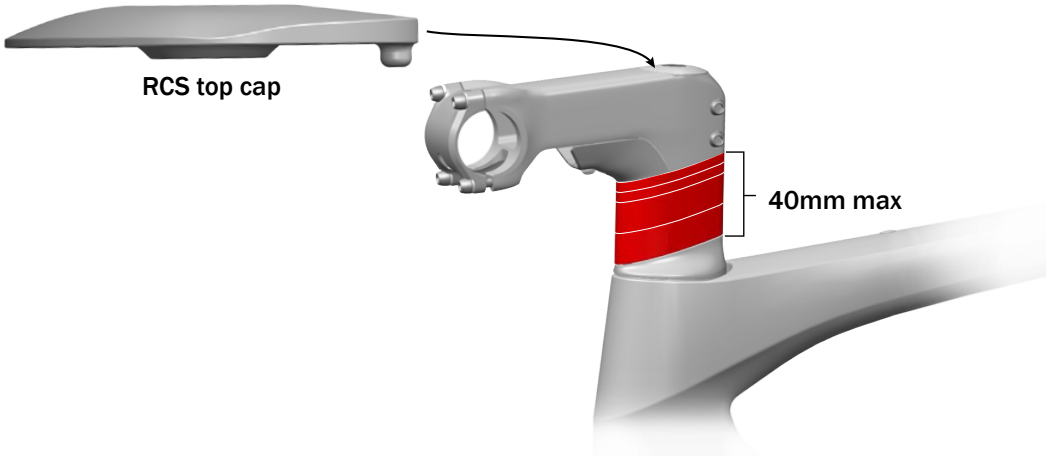

Above the stem

IMPORTANT: If there are any spacers above the stem, the steerer tube must extend slightly into the top spacer (1-2mm).

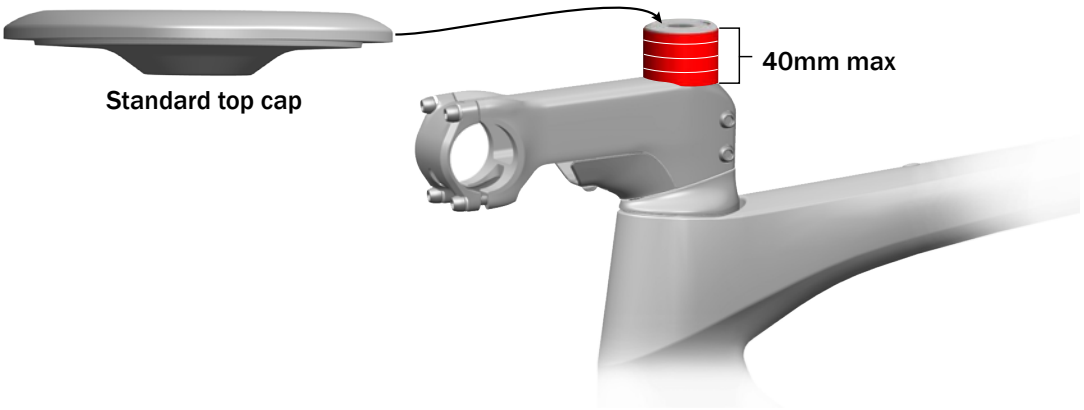

RCS stem: Blendr base

Mono base

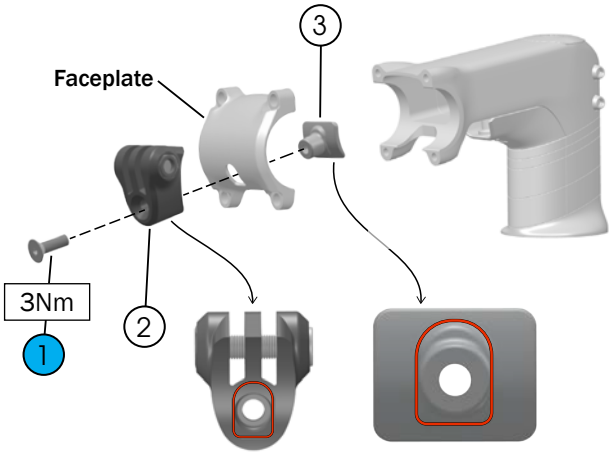

1. Fastener (M5x12mm)
2. Mono Blendr base
3. Nut

W5288447

NOTE: Your Blendr base may have a different nut than the ones shown above (3). If the nut is symmetrical, there is not a top or bottom.

Symmetrical nut



Duo base

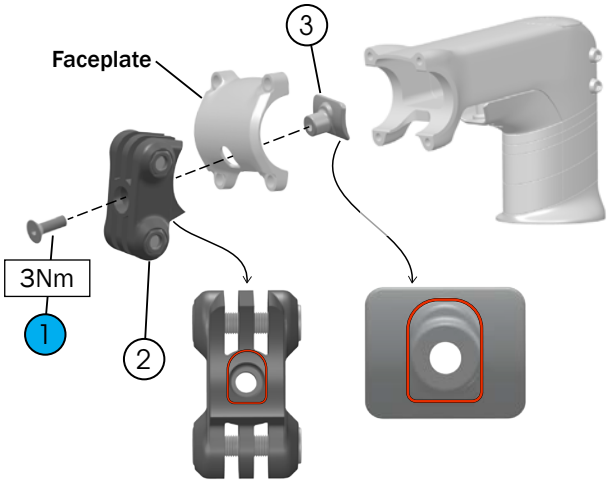

1. Fastener (M5x12mm)
2. Duo Blendr base
3. Nut

W5274964

RCS stem — install the headset

1. Route the split ring and bearing cover down the housings. Add spacers as needed.

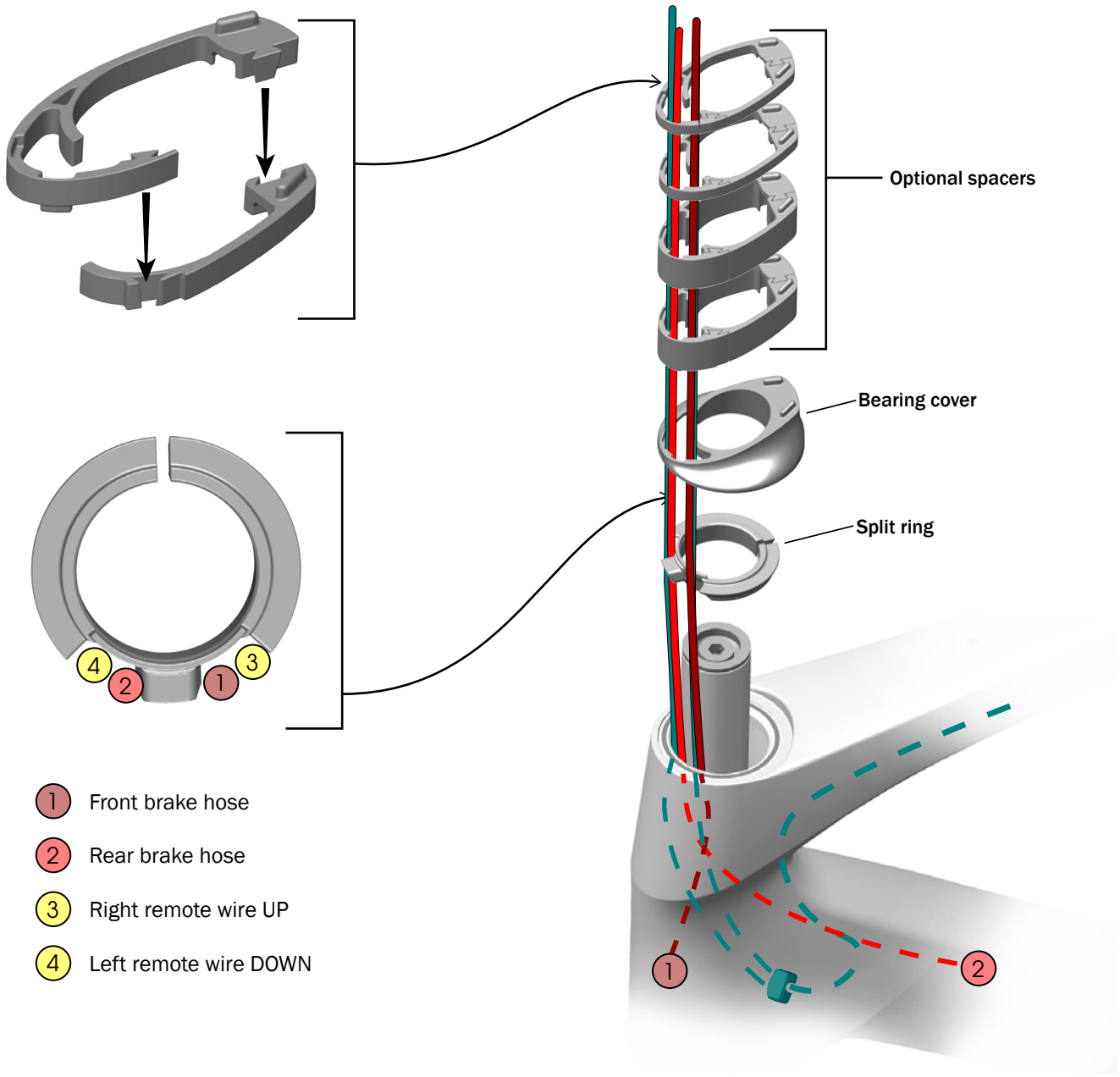

1. Front brake hose
2. Rear brake hose
3. Right remote wire UP
4. Left remote wire DOWN

RCS stem — install the stem

2. Slide the stem down the steerer tube and loosely tighten the stem fasteners.

   IMPORTANT: Do not fully tighten the stem or the headset will not load the downward weight properly.



3. Install the top cap and top cap fastener. If adding spacers above the stem, use a standard top cap (see RCS stem: spacers).

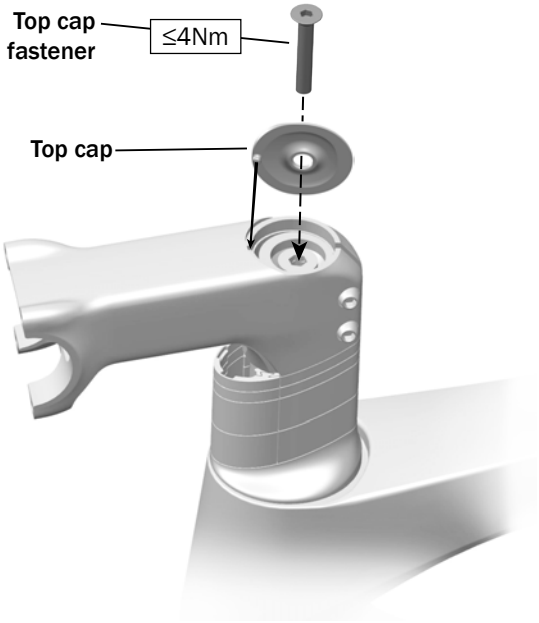

4. Tighten the stem fasteners — alternating between them — until both are torqued to 5.2Nm.

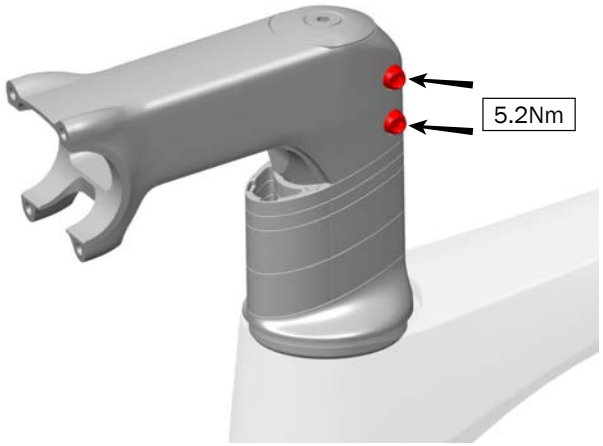

5. Install the routing cover.

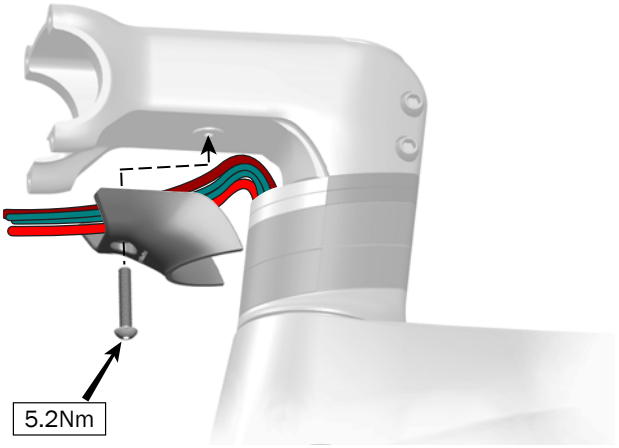

RCS stem: install the stem (continued)

6. (OPTIONAL) Attach the Blendr base to the faceplate.

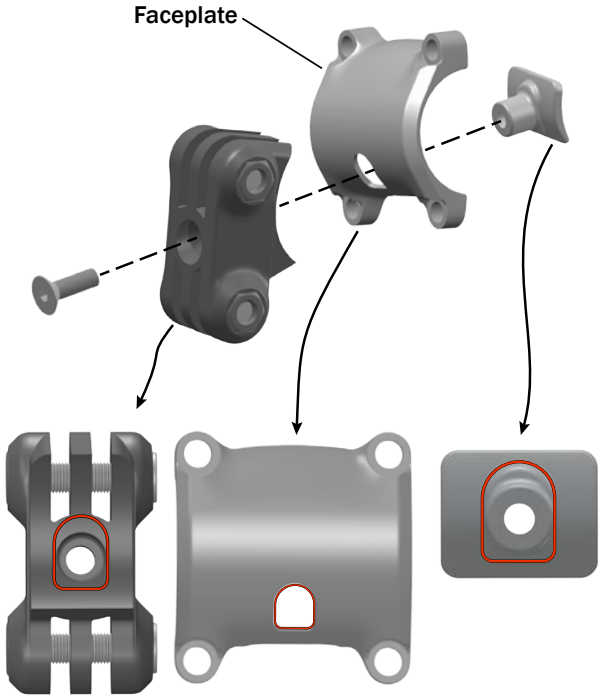

IMPORTANT: Make sure the nut is parallel and not rotated after tightening the fastener.

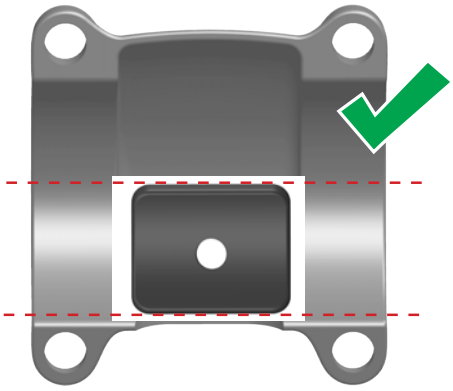

7. Insert the handlebar into the stem and loosely install the faceplate, faceplate fasteners, and washers. Align the handlebar.

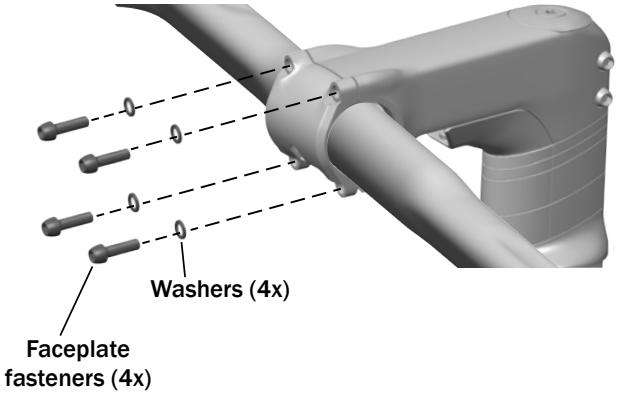

8. Tighten the faceplate fasteners — fully tightening the top fasteners, then the bottom ones — until you reach 5.2 Nm.

   NOTE: There should be a gap only between the lower faceplate and the stem.

Fork and headset — standard stem

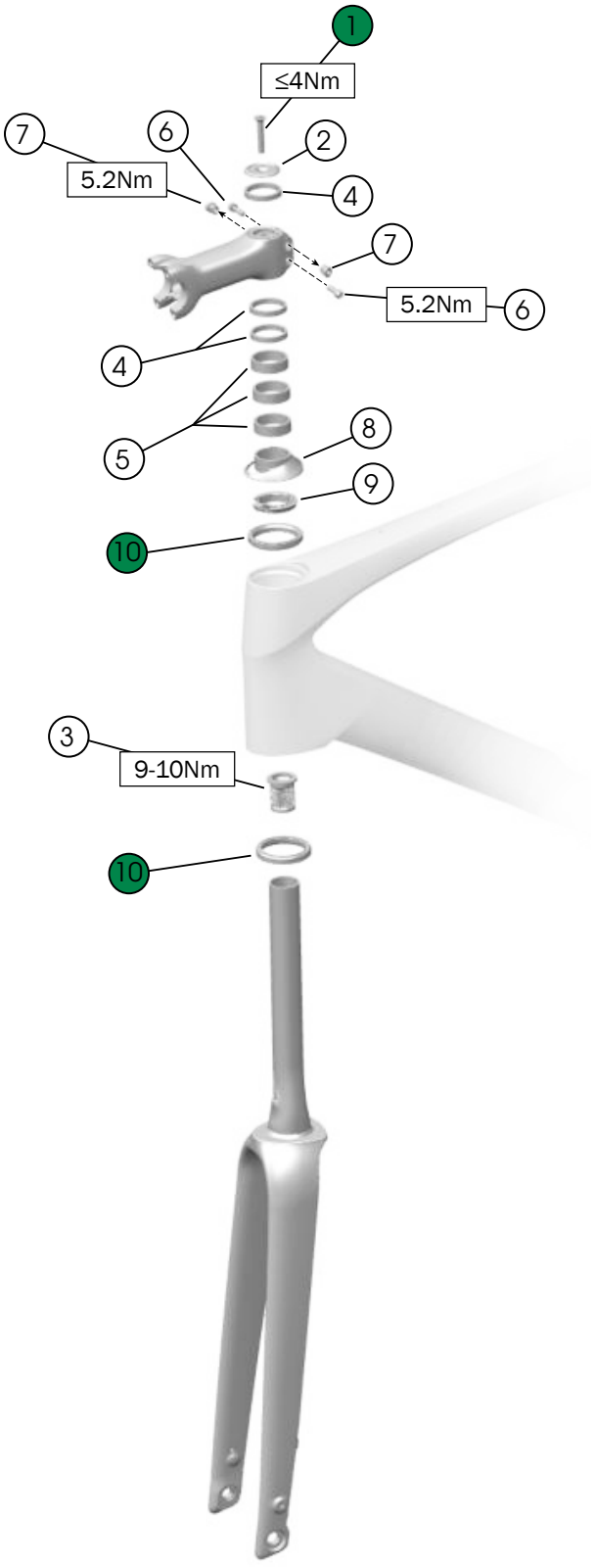

- 1 Top cap fastener
- 2 Top cap
- 3 Compression plug

W547432

- 4 Spacers (5mm) — *5253930*
- 5 Spacers (10mm) — *5253931*
- 6 Stem fasteners (M5x18.5mm)
- 7 D-nuts (M5)

5276082

- 8 Bearing cover (standard stem) — *W5274615*
- 9 Split ring — *W5274269*
- 10 Headset bearings — *W540243*
- 11 Front brake hose
- 12 Rear brake hose
- 13 Right remote wire UP
- 14 Left remote wire DOWN

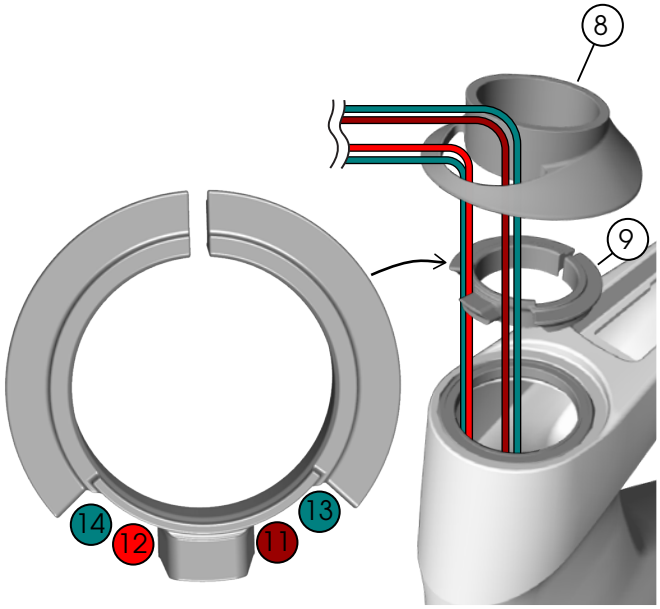

Seatpost

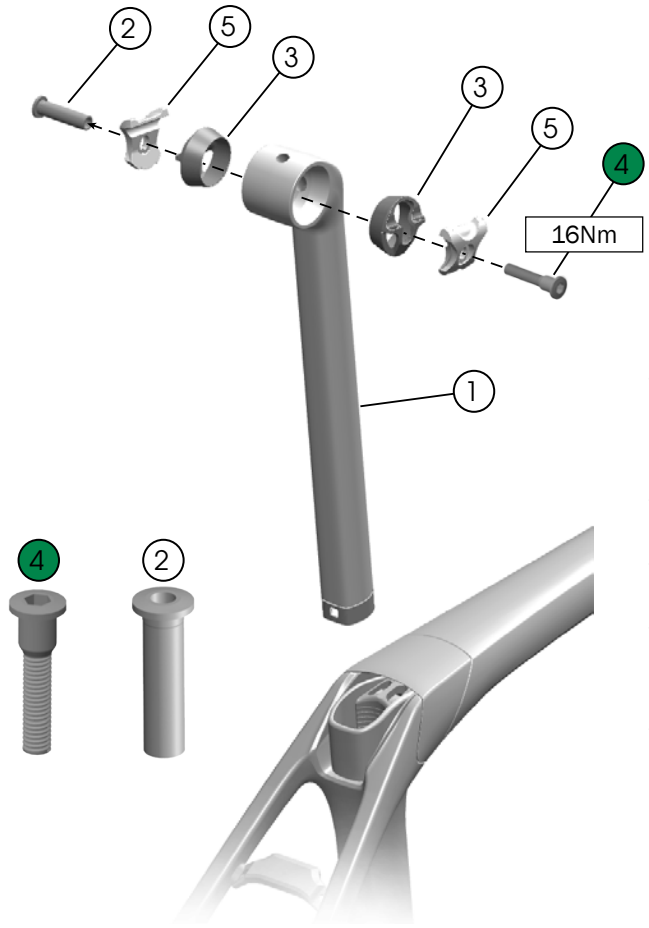

1 Seatpost
- Short — *W5285077**
- Long — *W5285078**
- Short (20mm offset) — *W5285075**
- Tall (20mm offset) — *W5285076**

2 Bolt insert
3 Barrels
4 Bolt (M6x16mm)
- *272628*

5 Saddle clamp ears
- (7mmx7mm) — *436657*
- (7mmx9mm) — *406923*
- (7mmx10mm) — *436658*

Minimum insertion

The seatpost must be inserted into the seat tube far enough that the minimum insertion line is at or below the top tube (as shown below).

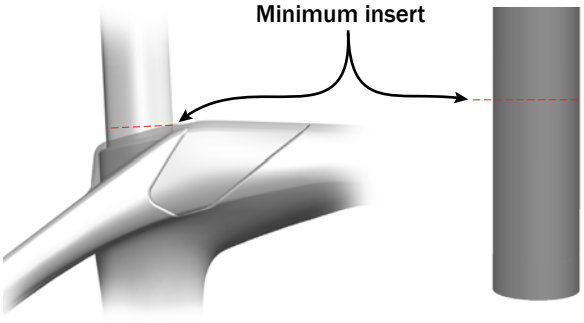

Maximum insertion

NOTICE: Do not lower the seatpost all the way to the stop point — this can inhibit IsoSpeed movement and cause damage to the seatpost. There must be at least a 5mm gap between the bottom of the seatpost and the stop bar.

NOTE: For exact measurements (BB to saddle rails), see the Geometry table on Trekbikes.com.

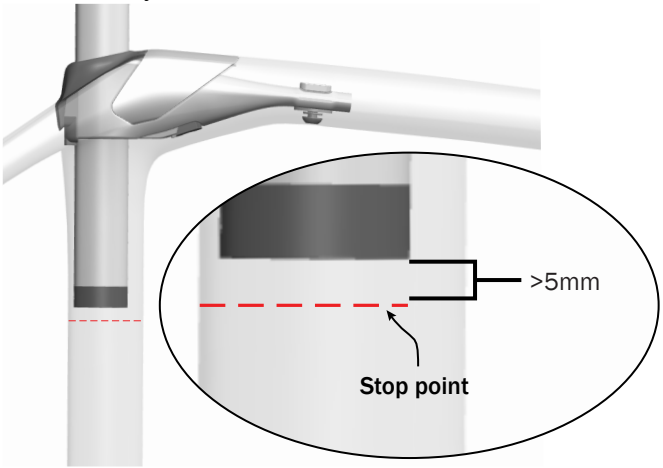

IsoSpeed

NOTICE: Do not perform routine maintenance on the IsoSpeed. Only service IsoSpeed hardware if you are replacing parts or torquing the pivot bolt (5).

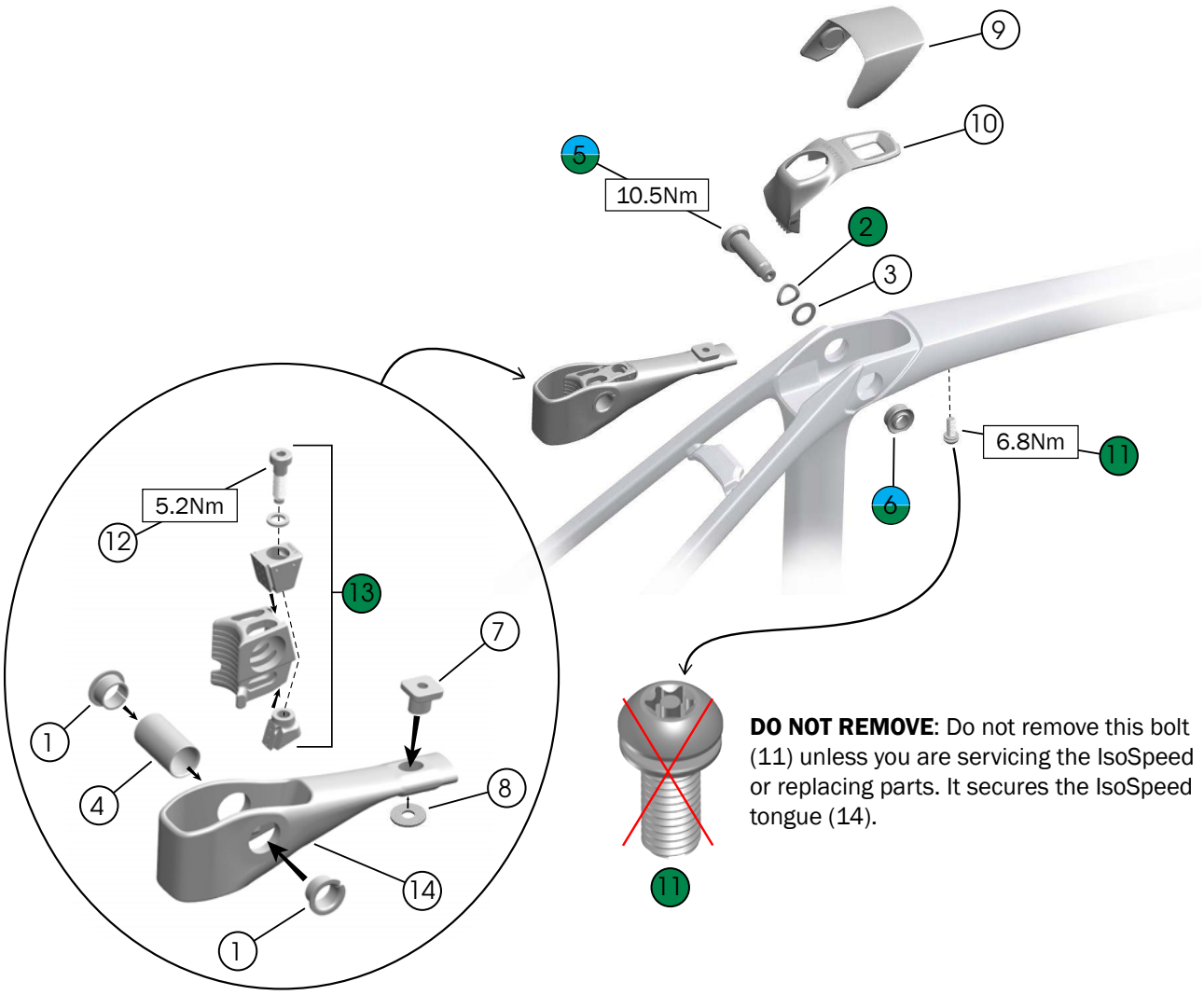

DO NOT REMOVE: Do not remove this bolt (11) unless you are servicing the IsoSpeed or replacing parts. It secures the IsoSpeed tongue (14).

1. Flanged bushings — *W5256074*
2. Wave washer (M10)
3. Washer (M10)
4. Cylindrical bushing
5. Pivot bolt (M10)
6. Nut (M10)

(2–6) — *5296536*

7. T-nut — *W5260276*
8. Washer (M6) — *W5260277*
9. *IsoSpeed cover (black) — *W5297965*
10. Wedge cover — *W5269805*
11. Bolt, T25 tamper-resistant (M6x16mm) — *W5280089*
12. Bolt (M6x22mm)
13. Wedge assembly parts

(12–13) — *W5275256*

14. IsoSpeed tongue

**This is a color-matched part — search trekbikes.com to find the right color for your bike.*

IsoSpeed: remove parts

NOTICE: Do not perform routine maintenance on the IsoSpeed. Only service IsoSpeed hardware if you are replacing parts.

1. Remove the assembly cover (9).

   NOTICE: Use your fingers to remove the cover. Do not use a tool or you could scratch the paint.

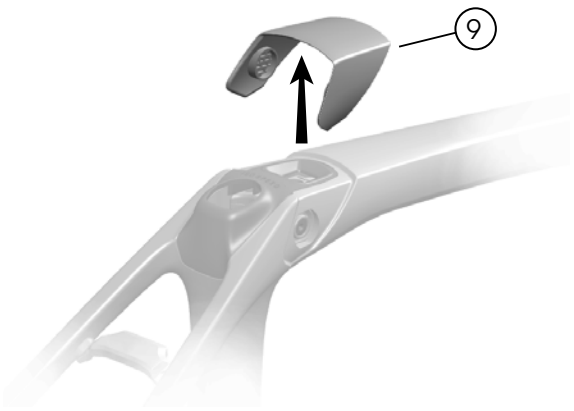

2. Remove the pivot bolt (5), washers (2, 3), and the nut (6).

   NOTICE: Do not continue removing the pivot bolt (5) if the nut rotates (6) — this could damage the frame pockets. If necessary, use a shim to hold the nut (6) in place while removing the pivot bolt (5).

3. Remove the rest of the IsoSpeed parts as shown on page 25.

IsoSpeed: install parts

NOTICE: Do not perform routine maintenance on the IsoSpeed. Only service IsoSpeed hardware if you are replacing parts.

IMPORTANT: Clean all parts before reinstalling them using 50/50 isopropyl/water mix.

1. Grease the wedge assembly as shown below.

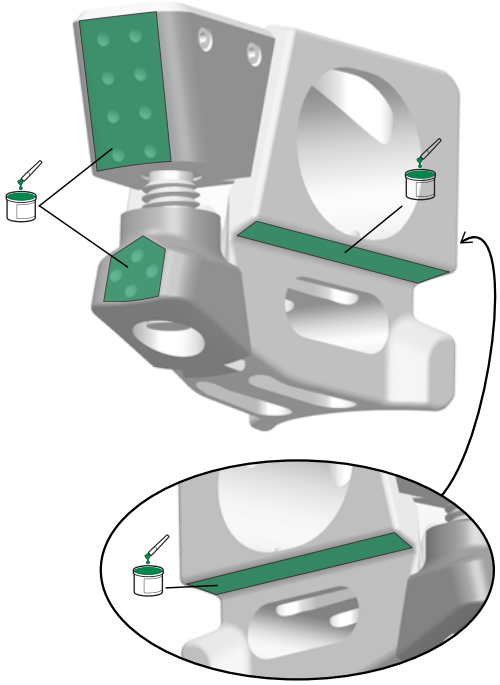

2. Assemble the tongue assembly (see page 25) and insert it into the frame. Insert and torque the bolt (9).

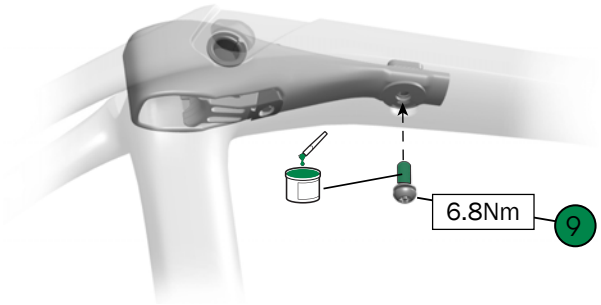

3. Apply threadlocker to the pivot bolt (5) and nut (6) threads.

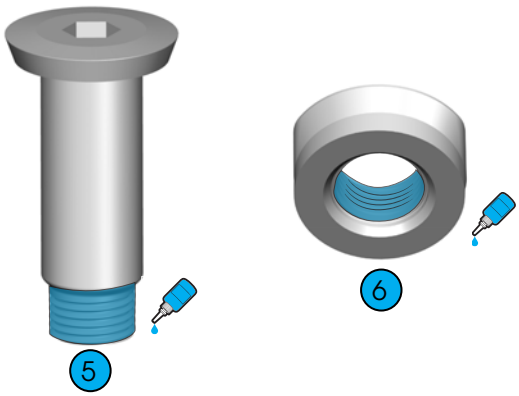

4. Place the wave washer (2) on the pivot bolt (6) and apply grease as shown below.

   NOTE: Do not apply grease to the frame pockets or bushings. The grease could contact the pivot bolt threads.

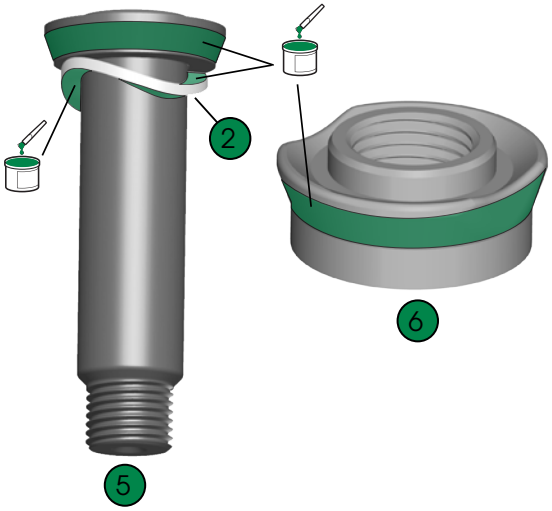

5. Install the nut (6) and pivot bolt (5). Torque the bolt to 10.5 Nm.

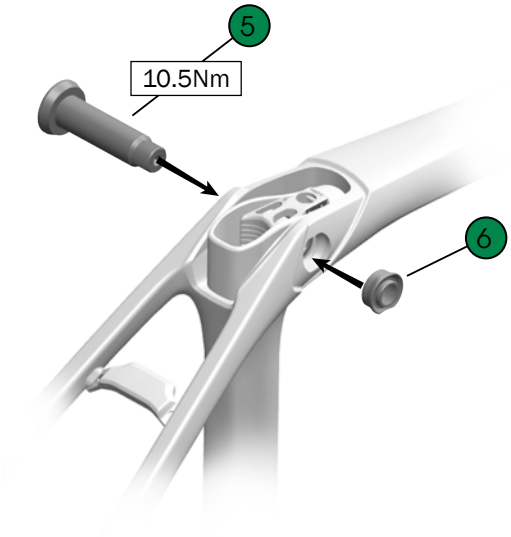

Derailleur hangers

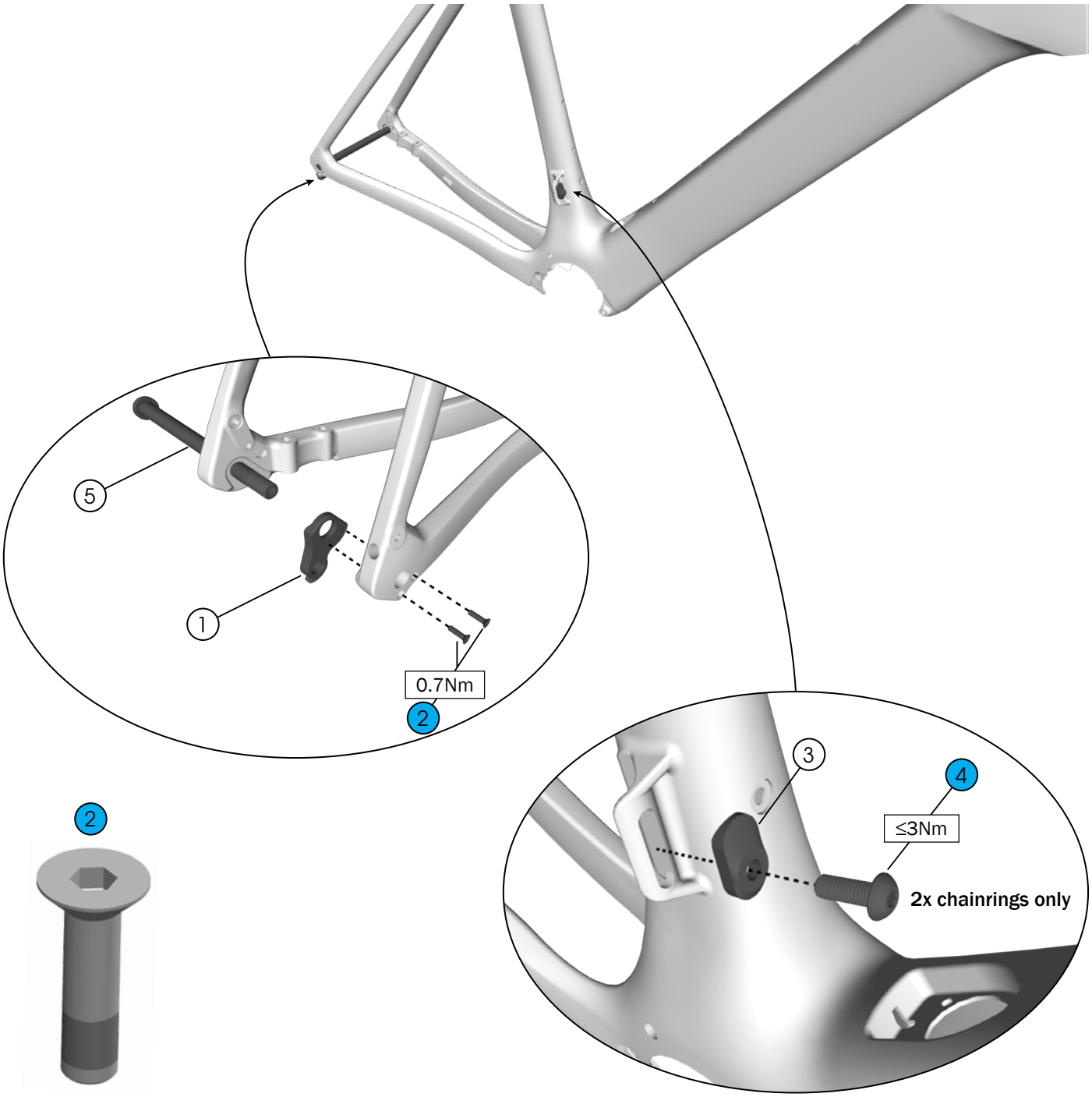

1. Rear derailleur hanger — *W524188*
2. Rear derailleur hanger bolts (M3x12mm) — *W524884*
3. Front derailleur hanger — *W319573*
4. Front derailleur hanger bolt (M5x14mm) — *1052311*
5. Rear thru axle — *W572054*

Frame

Fenders



1 Bolts (M4x8mm) — *W302605*

2 Seat stay bridge
- ≤50cm frames — *W595608*
- ≥52cm frames — *W602256*

Access plugs

Use the upper access hole to push the display out if it's stuck. Use the lower access hole to hold the cable tray in place using a 5mm hex tool.

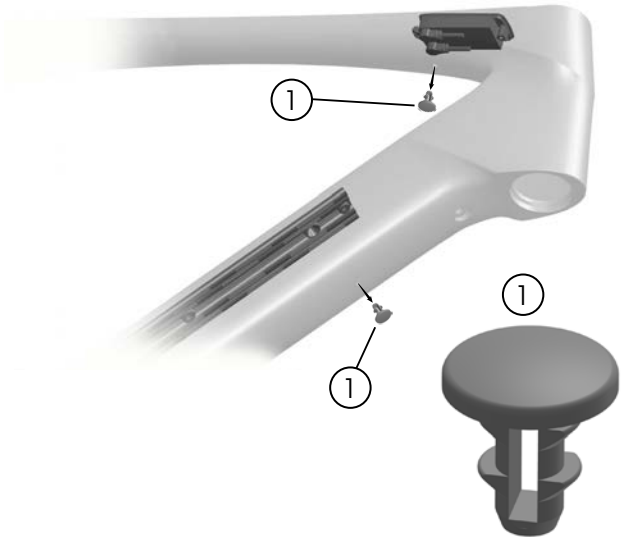

1 *Hole cover — *W5297943*

**Also used to cover fender and rack mount bosses*

Water bottle cage mounts

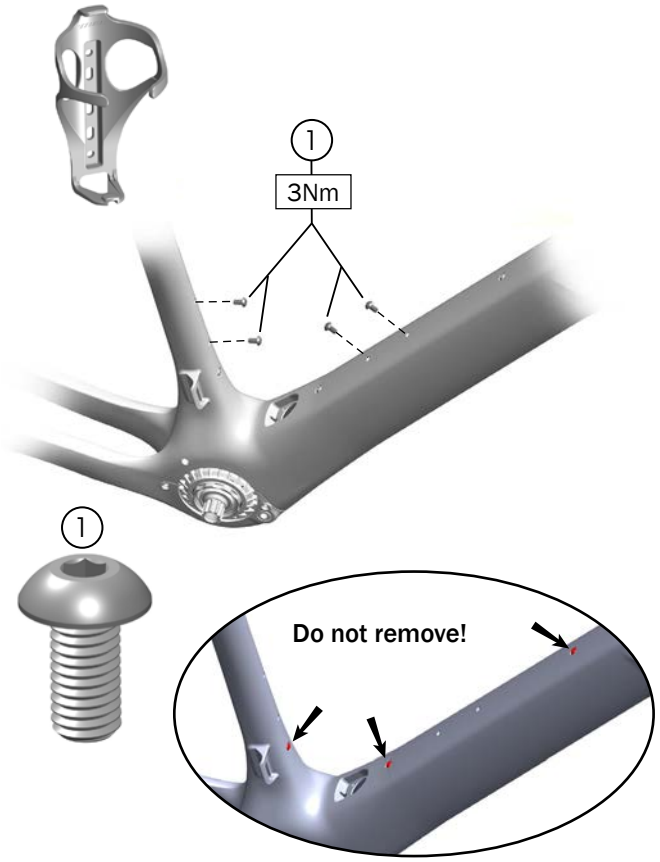

1 Bolts (M5x10mm) — *5332051*

Specifications

Frame

		SLR
Rear hub OLD		142mm
Front hub OLD		100mm
Upper fork steerer tube OD		28.6mm
Lower fork steerer tube OD		38.1mm
Brake rotor diameter min/max	**Front**	160/180mm
	Rear	140/160mm
Tire width max 700c	**With fenders**	35mm
	Without fenders	40mm (as measured when the tire is seated on the rim)
Fender compatible	**Front**	Yes
	Rear	Yes

Tire width max

NOTE: Tire width is measured when the tire is seated on the rim (following the measurement shown below).

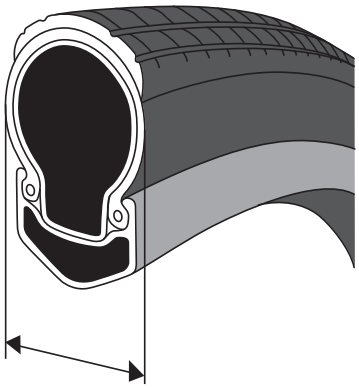

Tire width max 700c	**With fenders**	35mm
	Without fenders	40mm

Chainline/chainring

	Chainline	Max chainring teeth (T)		
		Small	Large	Single (1x)
	47.5mm	36T	52T	—
***SRAM**	47.5mm	—	—	46T

**Only a 1x chainring is compatible with SRAM drivetrains.*