

DOMANE SL/SLR GEN 5

SERVICE MANUAL

Contents

Routing

[Routing — mechanical](#)

[Routing — Di2](#)

[Install the Di2 battery](#)

[Routing — AXS](#)

Headset

Trek Road bikes are compatible with:

- RCS Pro
- RCS Race
- RCS Universal

For detailed information, see

"Service manual — 2025 & newer Road bike headsets"

Consumer link | Dealer link

[Seatpost wedge](#)

[Install the seatpost wedge](#)



[Universal derailleur hanger (UDH) and axles](#)

[Chainkeeper](#)

[Bottom bracket cover](#)

Frame

[Brake mount adapters](#)

[Fender mounts (optional)](#)

[Frame mounts](#)

[Bottles and bag](#)

[Specifications](#)

Copyright 2026 Trek Bicycle Corporation All Rights Reserved

About this manual

Scope

This manual contains parts diagrams, specifications (such as grease and torque values), instructions, part numbers, and helpful tips. It does not contain instructions for all components (such as brake calipers). Refer to the original manufacturer for more information.

Replacement parts

Trek recommends using only Trek OEM (original manufacturer) replacement parts.

Additional info

- Trek Bicycle Owner's Manual: trekbikes.com/manuals

Inspect the bike

Please inspect the bicycle carefully after removal from the box and all packaging:

- Inspect all surfaces of the bicycle for damage, pay special attention to the fork legs and the seat stays (both inside and outside surfaces).
- If packaging damage is located near the front of the bicycle, remove the fork from the frame and inspect the steerer tube for damage.

3D interactive graphics

Click the icon in this manual to view interactive models.

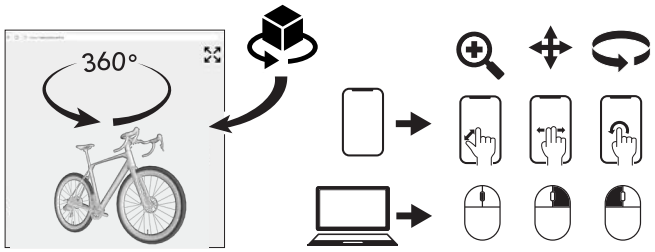

Legend


Cable (zip) tie

Nm Torque value

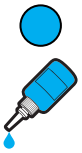
Apply appropriate threadlocker


Apply Bontrager grease

Safety

WARNING

Properly tighten hardware

Always tighten hardware to the specified torque. Over-tightening hardware could deform or break the hardware or components. Under-tightening or over-tightening hardware could cause hardware or components to become loose. Either situation could damage the bicycle and result in injury to the rider.

WARNING

Reapply threadlocker

All reused-fasteners with pre-applied threadlocker must be cleaned with isopropyl alcohol and have new threadlocker applied before re-assembly. If threadlocker is not applied, the fasteners may loosen which could damage the bicycle and result in injury to the rider.

We value your feedback

We hope you find our manual useful. To help us improve, please take a brief survey about your experience. We periodically update our manuals and your input ensures we provide the highest quality user experience.



For product help or inquiries:

Please visit trekbikes.com/contactus or call Customer Care.

Routing — mechanical

SL only

NOTE: The SLR is only compatible with electronic shifting.

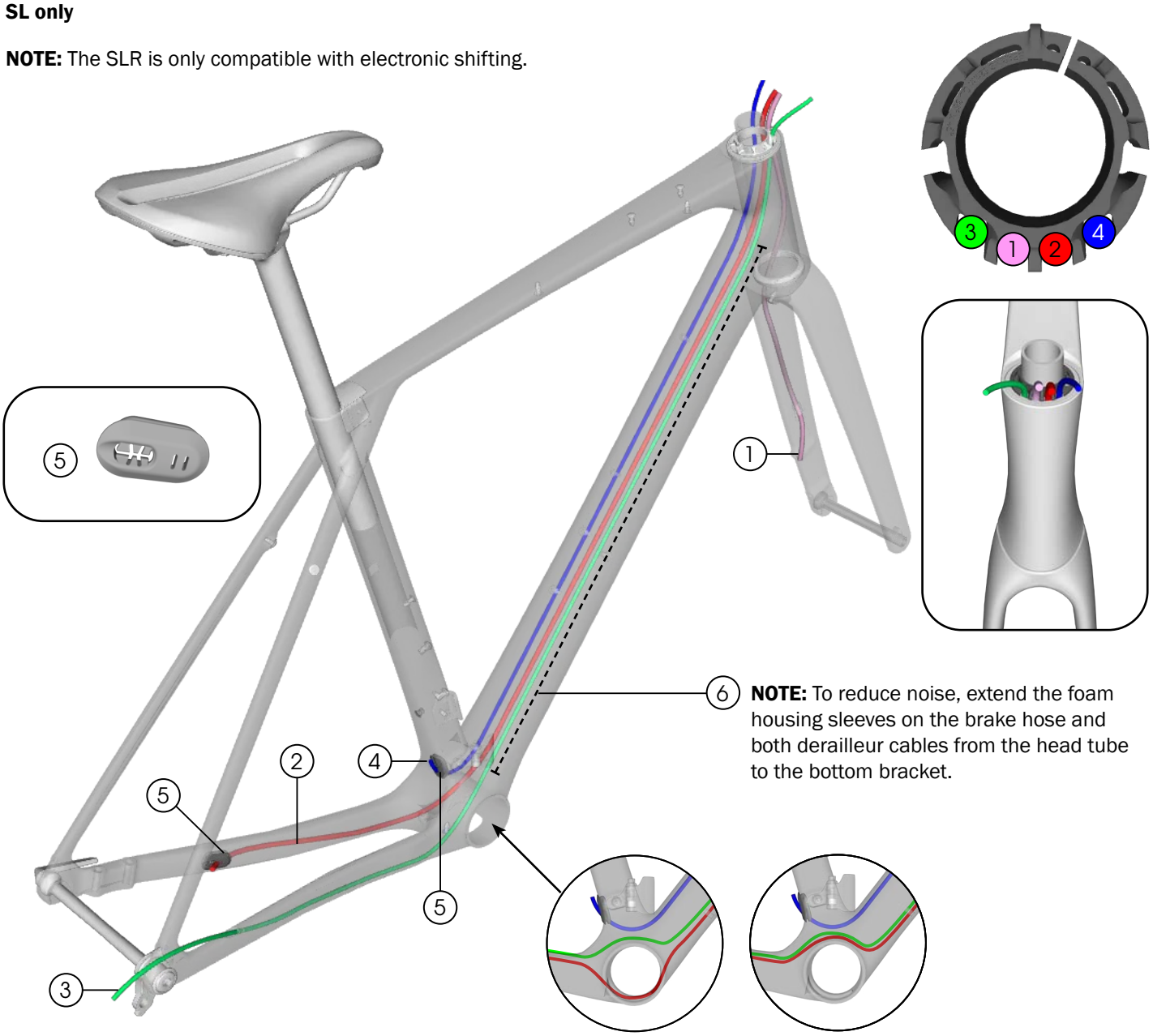

NOTE: To reduce noise, extend the foam housing sleeves on the brake hose and both derailleur cables from the head tube to the bottom bracket.

Route the rear derailleur cable **over** the bottom bracket.

Route the rear brake hose **under** the bottom bracket if length allows; otherwise, route it **over**.

1. Front brake hose
2. Rear brake hose
3. Rear derailleur cable
4. Front derailleur cable
5. Housing grommets — *W330578*
6. Foam housing sleeve — *W528082*

Routing — Di2

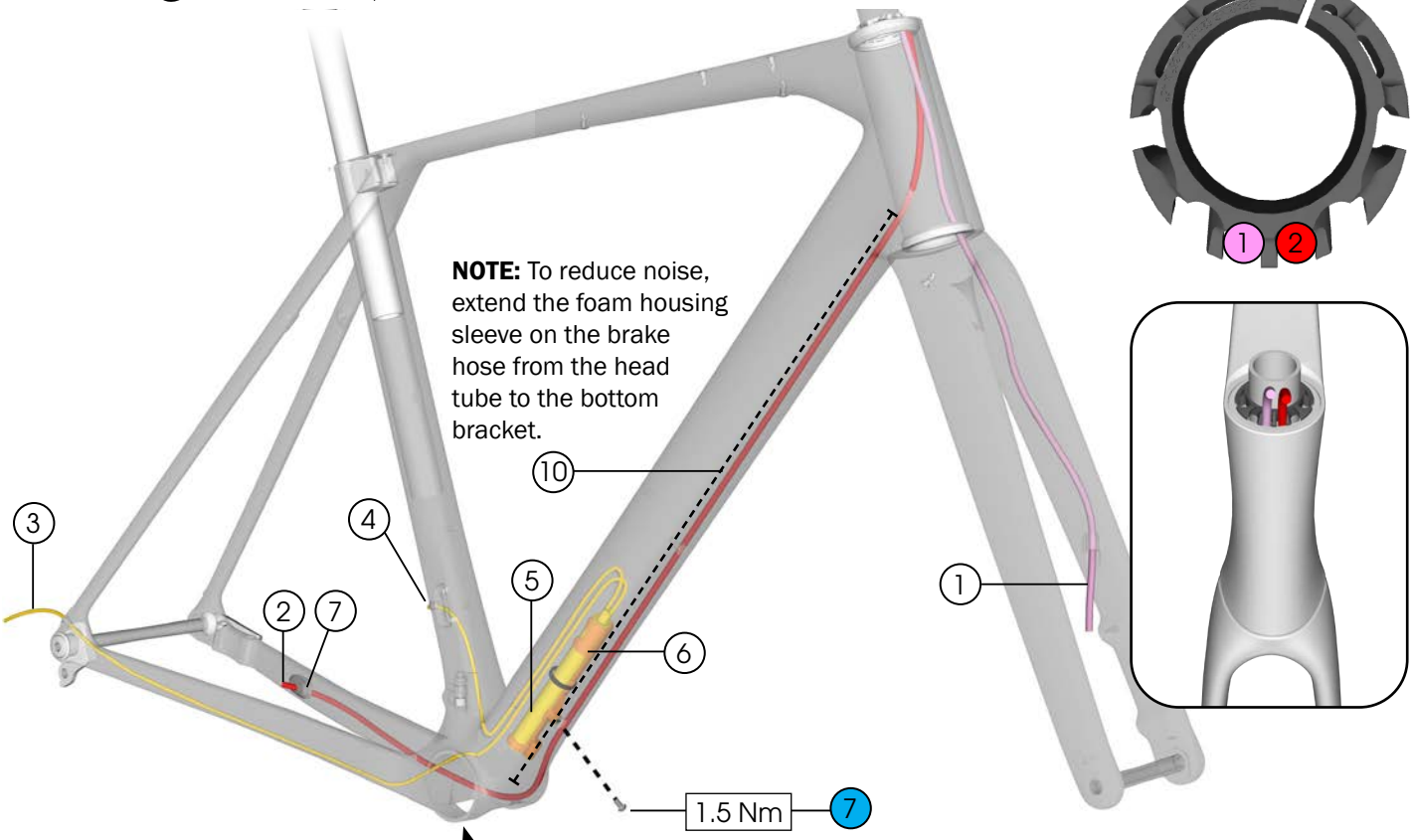

SLR

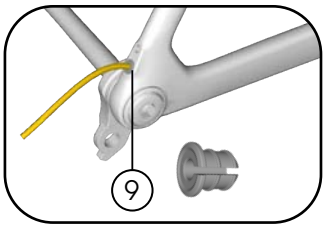

SLR

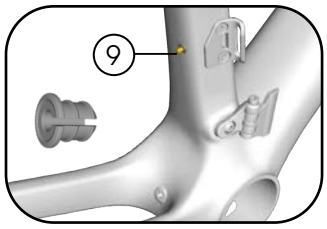

SL

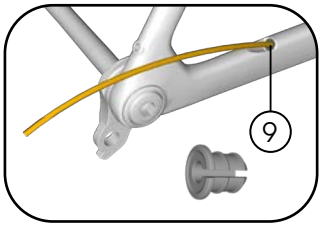

SL

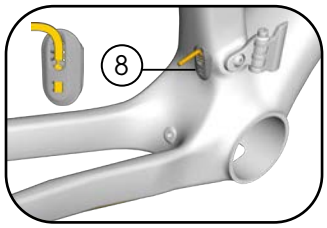

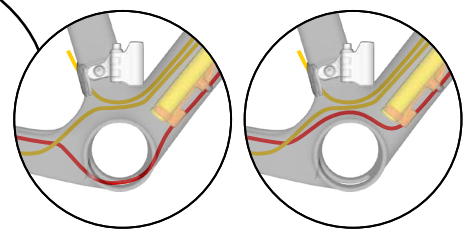

Route the Di2 cables **over** the bottom bracket.

Route the rear brake hose **under** the bottom bracket if length allows; otherwise, route it **over**.

1. Front brake hose
2. Rear brake hose
3. Rear Di2 cable
4. Front Di2 cable

— **EW-SD300-I*

5. Di2 battery — **BT-DN300*
6. Di2 battery holder
7. Fastener (M4 x 8 mm)





— *5352811*

8. Housing grommet(s) — *W330578*
9. Cable exit grommet(s) — *W600208*
10. Foam housing sleeve — *W528082*

*Shimano part number

Install the Di2 battery

1. Insert the battery into the battery holder.

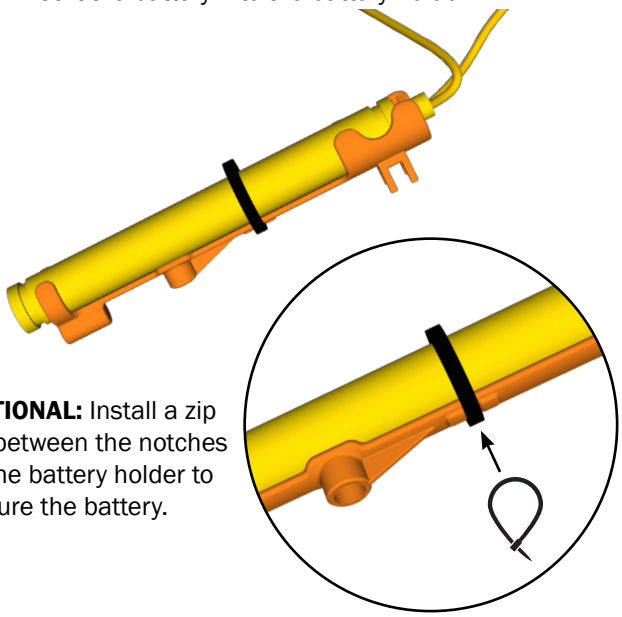

OPTIONAL: Install a zip tie between the notches in the battery holder to secure the battery.

2. Insert the battery and battery holder through the bottom bracket area.

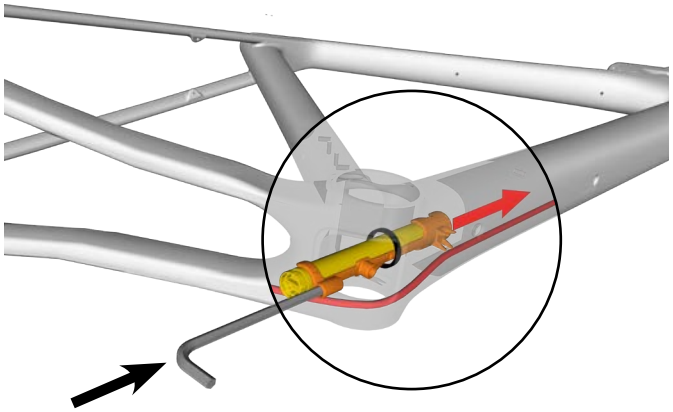

TIP: Use a 6 mm hex tool to help guide the battery holder up into position inside the down tube.

3.

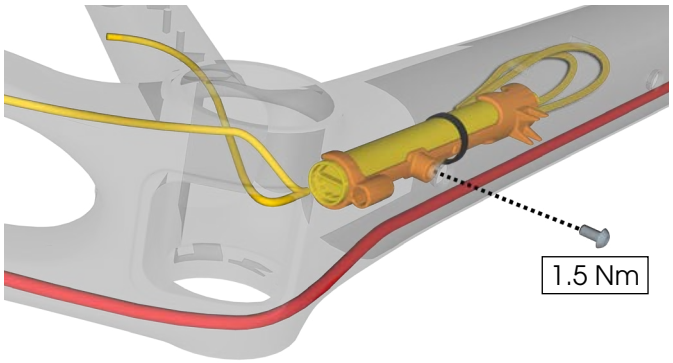

Routing — AXS

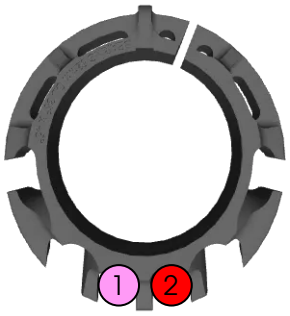

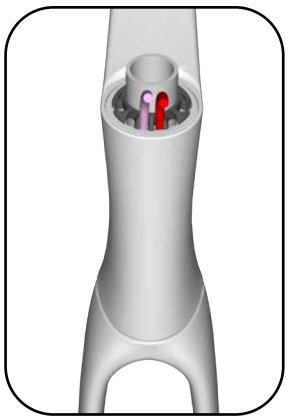

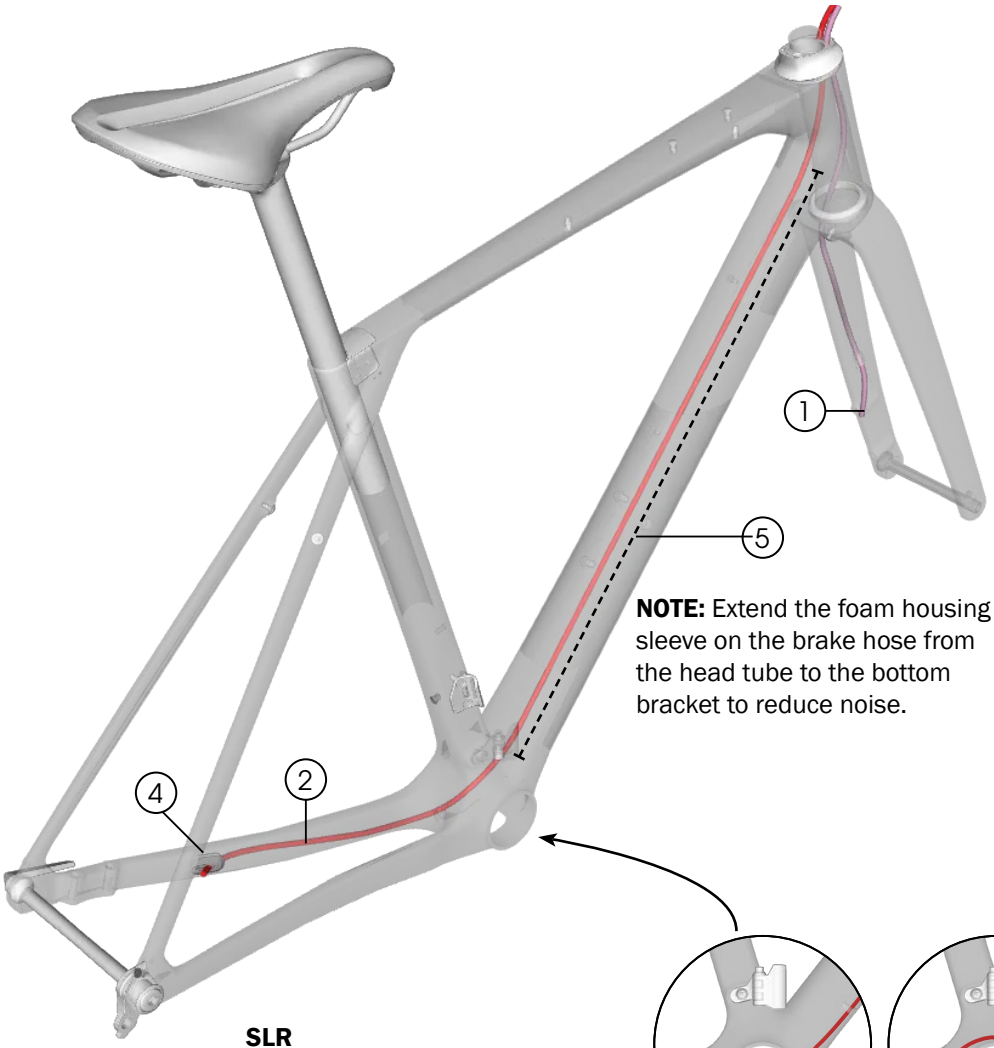

NOTE: Extend the foam housing sleeve on the brake hose from the head tube to the bottom bracket to reduce noise.

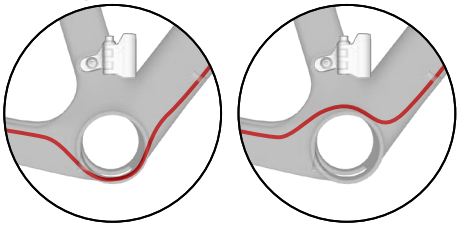

Route the rear brake hose **under** the bottom bracket if length allows; otherwise, route it **over**.

SLR

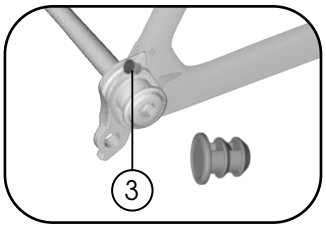

SLR

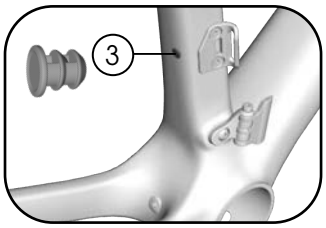

SL

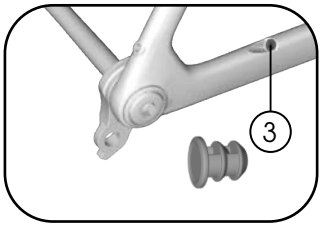

SL

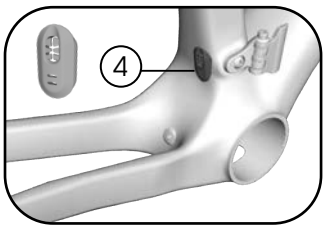

1. Front brake hose
2. Rear brake hose
3. Cable exit grommet(s) — *W600209*
4. Housing grommet(s) — *W330578*
5. Foam housing sleeve — *W528082*

Bottom bracket cover

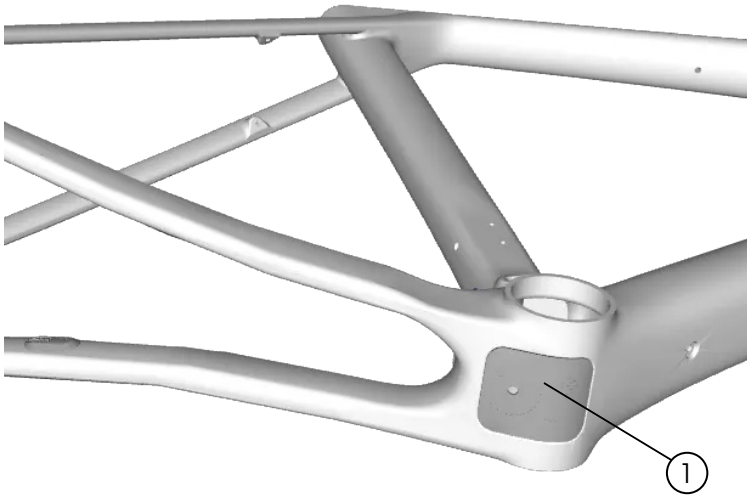

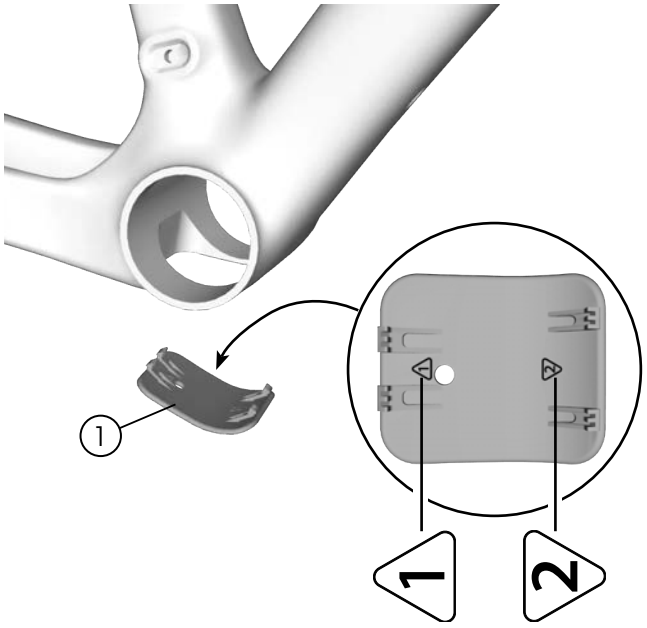

1 Bottom bracket cover — *W5343263*

1. Insert rear side first.

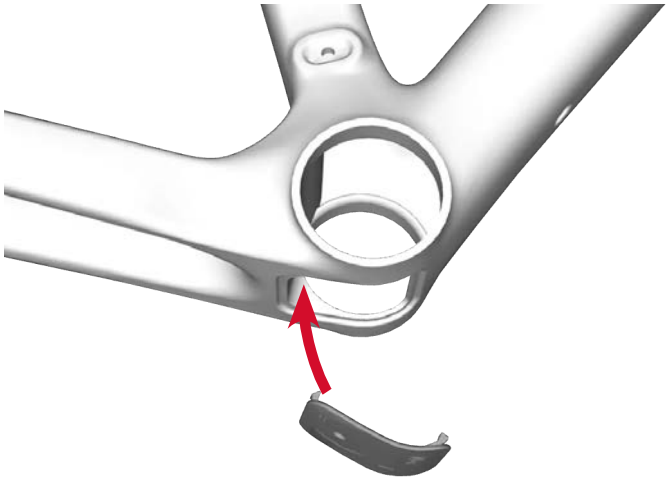

2.



Seatpost wedge

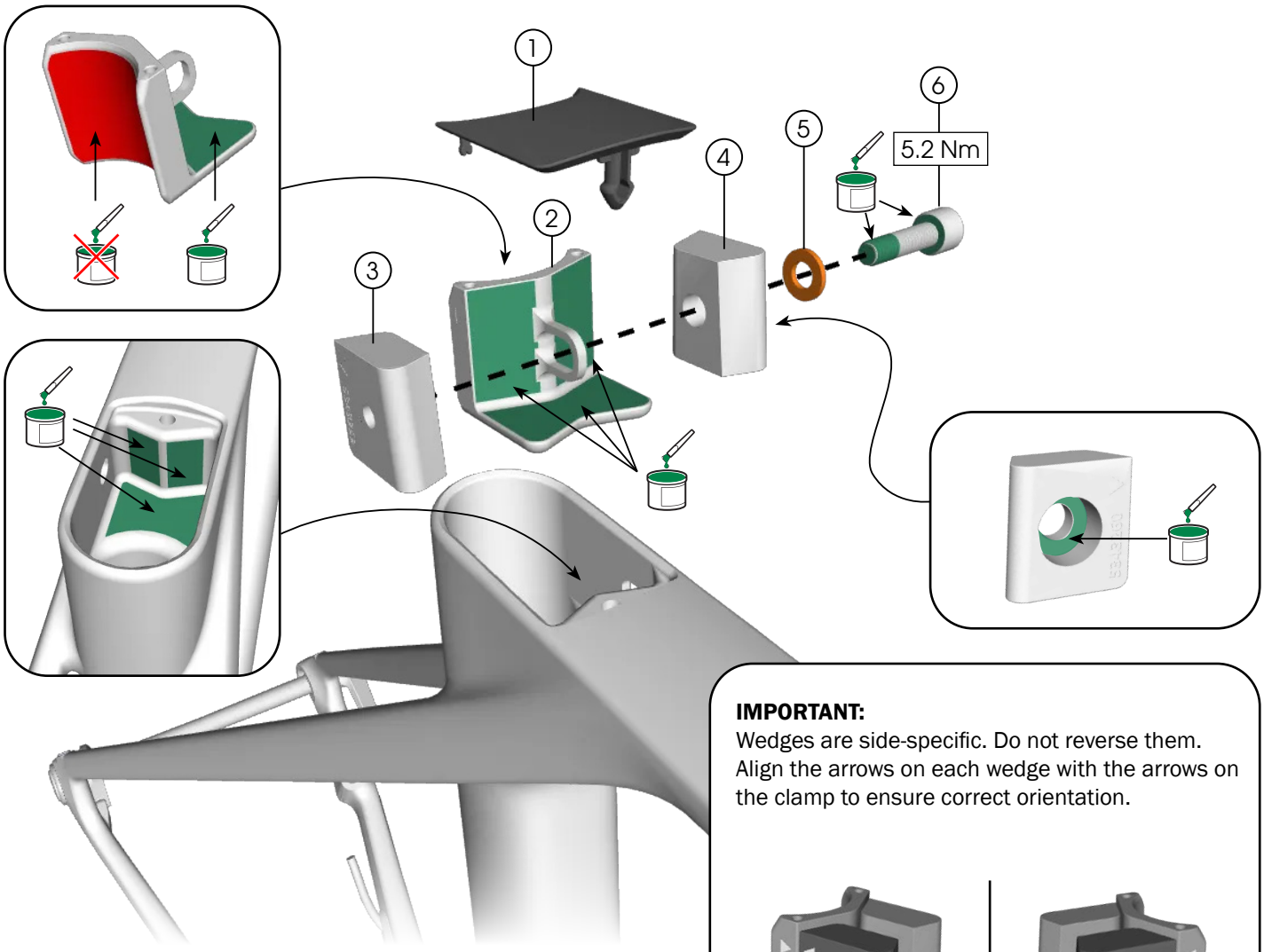

IMPORTANT:
Wedges are side-specific. Do not reverse them. Align the arrows on each wedge with the arrows on the clamp to ensure correct orientation.

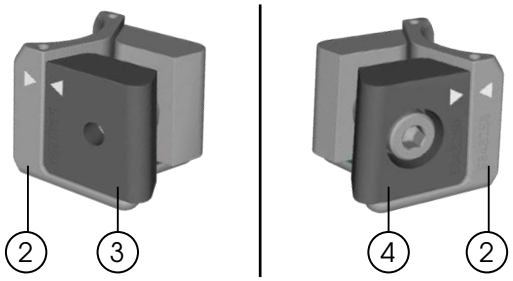

1. Seatpost wedge cover — *W5343262*
2. Clamp
3. Driveside wedge
4. Non driveside wedge
5. Washer (10 mm x 1 mm)
6. Fastener (M5 x 16 mm) 4

— *W5343261*

Install the seatpost wedge

1. Insert the clamp, both wedges, washer, and fastener. Ensure the wedge and wedge pocket are clear of debris and grit, and apply grease only to specified locations.

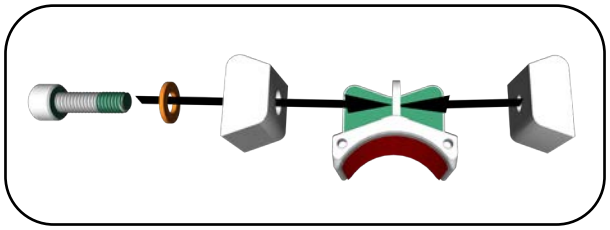

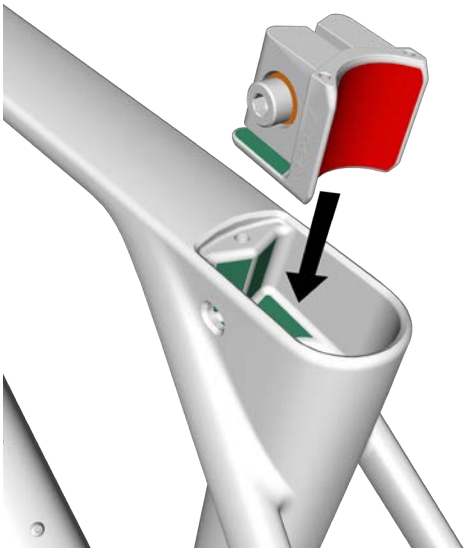

2. Insert seatpost to the appropriate height. Ensure the seatpost is inserted past the minimum-insertion mark.

IMPORTANT: Fit the seatpost dry. Do not apply grease or carbon paste to any part of the seatpost.

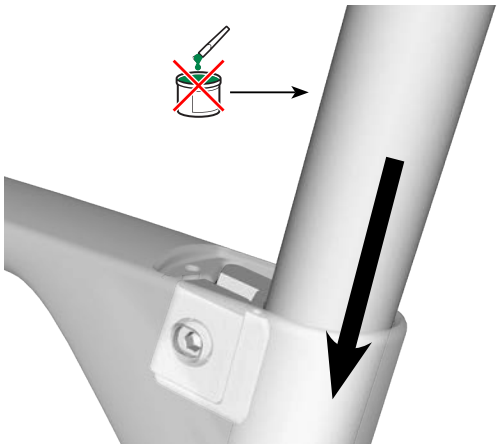

3.



4.

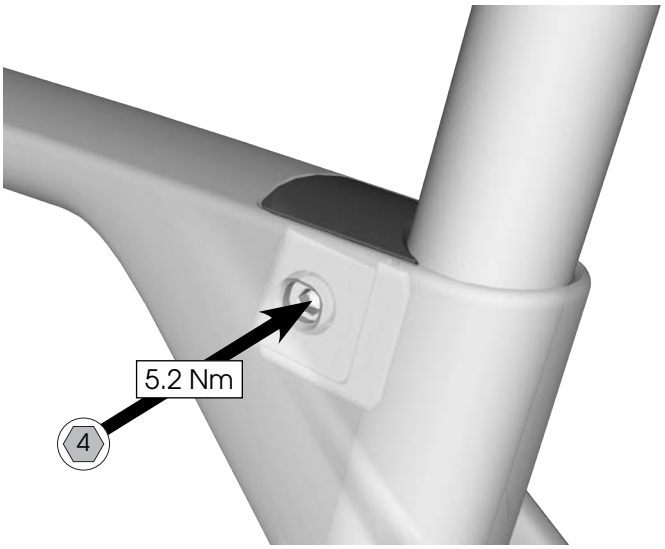

Seatpost adjustment

There is no need to remove the cover or wedge.

1. Loosen the fastener.
2. Slide the seatpost to appropriate height.
3. Torque as shown above.

Universal derailleur hanger (UDH) and axles

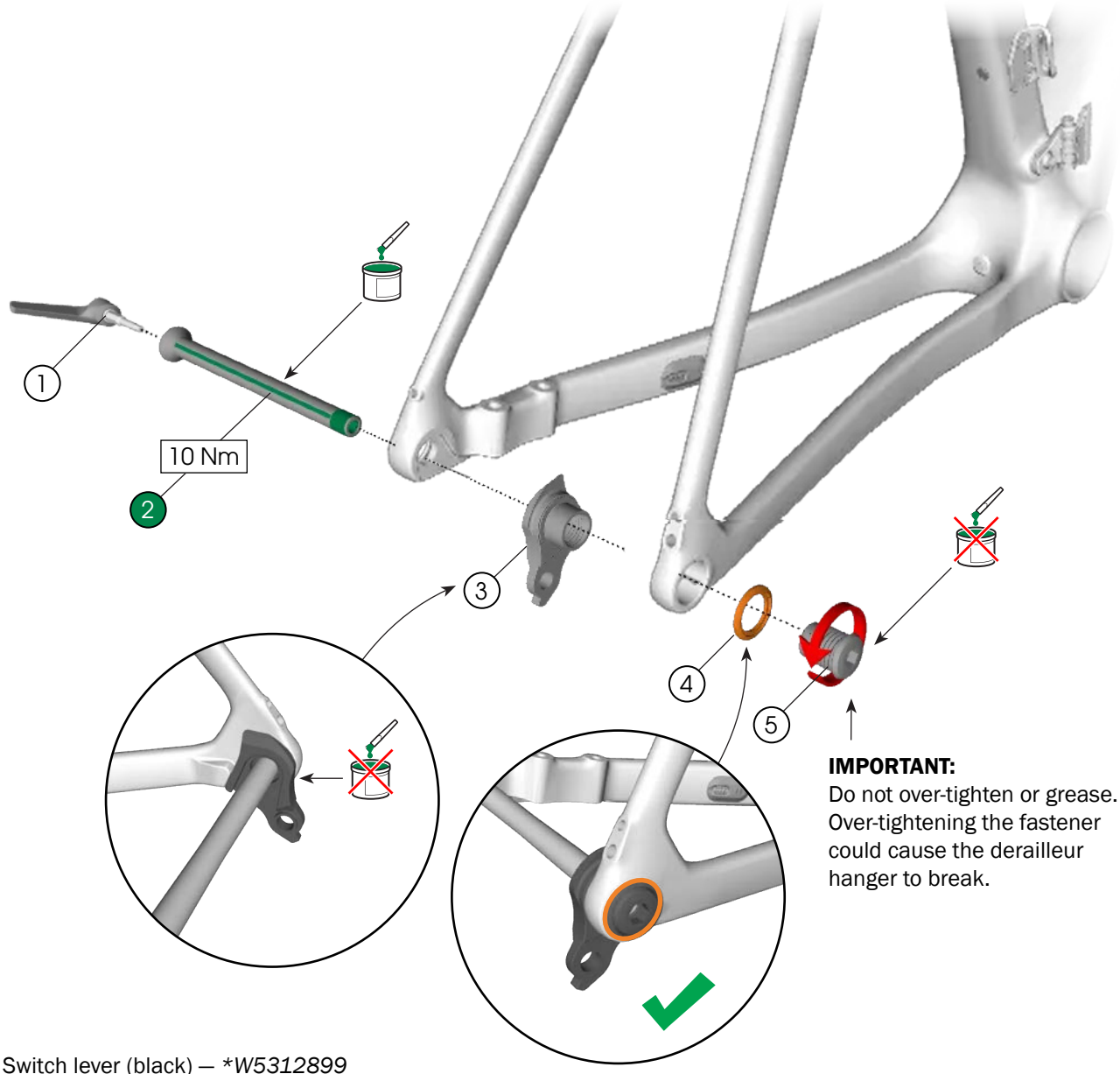

IMPORTANT:
Do not over-tighten or grease. Over-tightening the fastener could cause the derailleur hanger to break.

1. Switch lever (black) — **W5312899*
2. Rear axle (M12 x 166 mm) — *†W5312169*
3. Derailleur hanger
4. Washer (25 mm)
5. Fastener (M12 x 16 mm) 8

W5271424

6. Front thru axle — *†W5312168*

**Available aftermarket. Search part number on trekbikes.com for full switch lever product list.*
†Color-matched part — see trekbikes.com for full list.

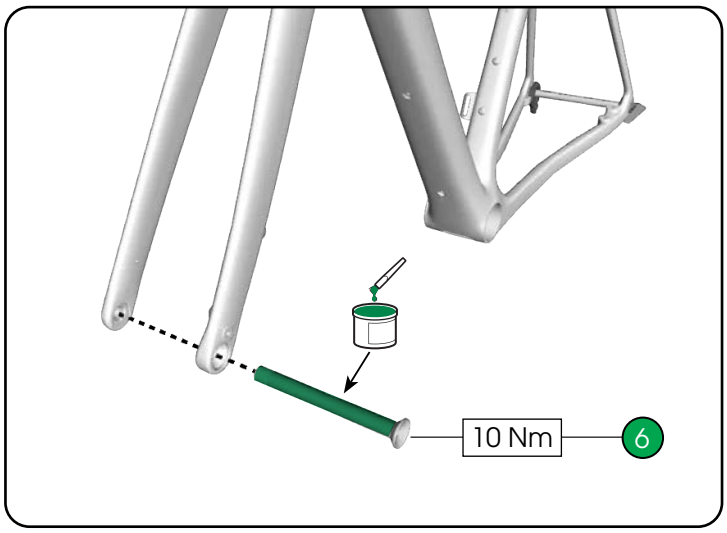

Chainkeeper

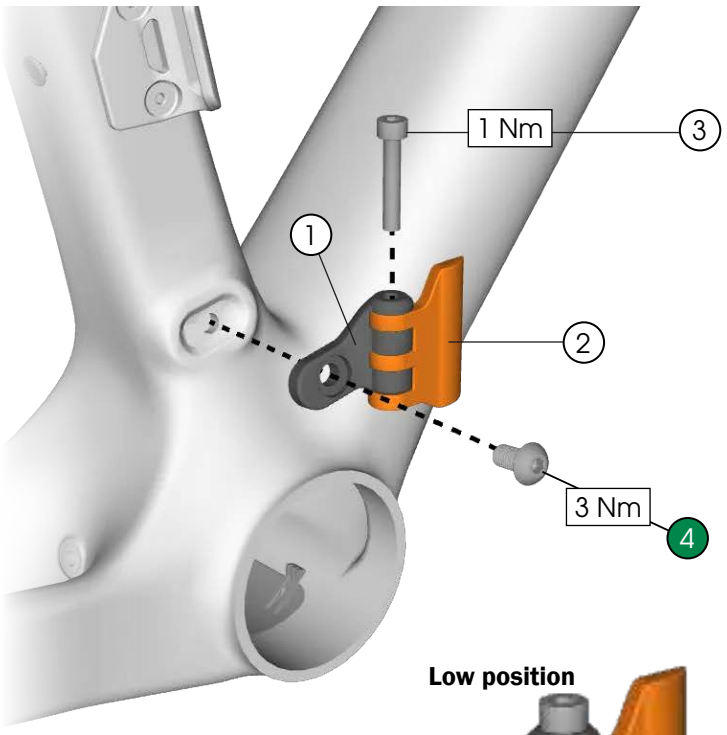

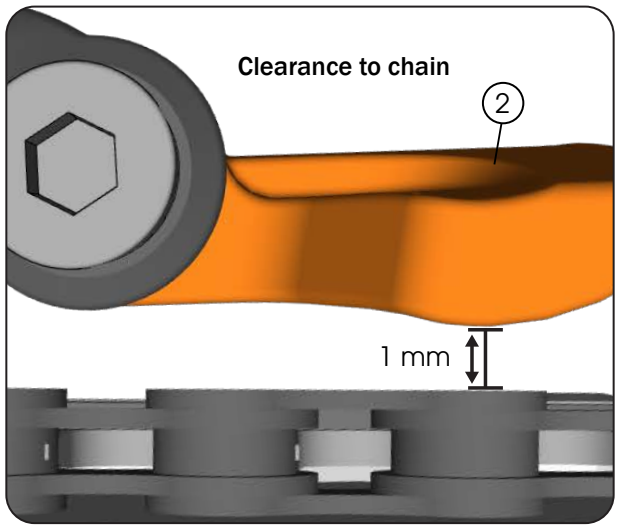

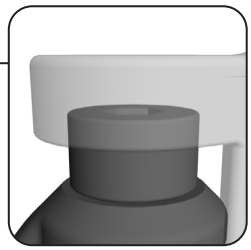



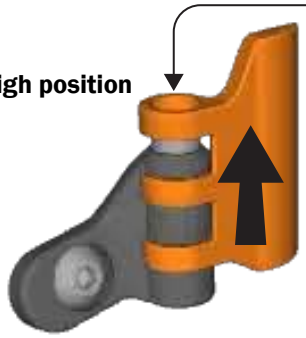

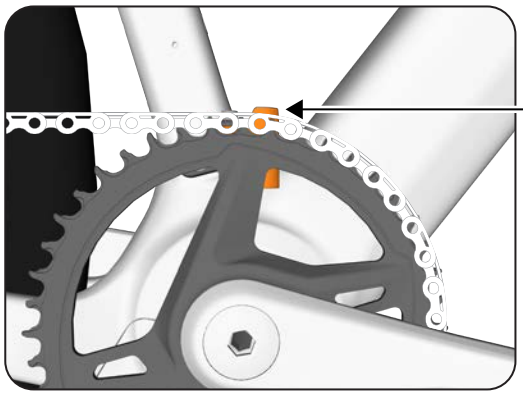

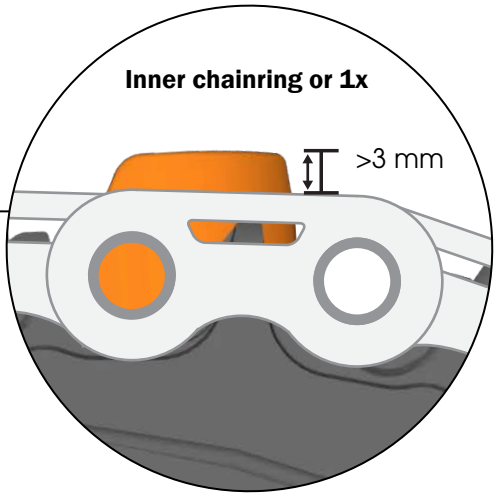

Move chainkeepr to high position if necessary.

1. Base
2. Tab
3. Fastener (M4 x 22 mm)  — *5320962*
4. Fastener (M5 x 16 mm)  — *5328801*

Brake mount adapters

WARNING

Risk of injury or death due to incorrect brake mounting

Correctly orient the brake mount adapter so that the brake pads align fully with rotor. Improper installation of brake mount adapter can result in brake failure, loss of control, and injury or death.

Front	160 mm rotor	180 mm rotor

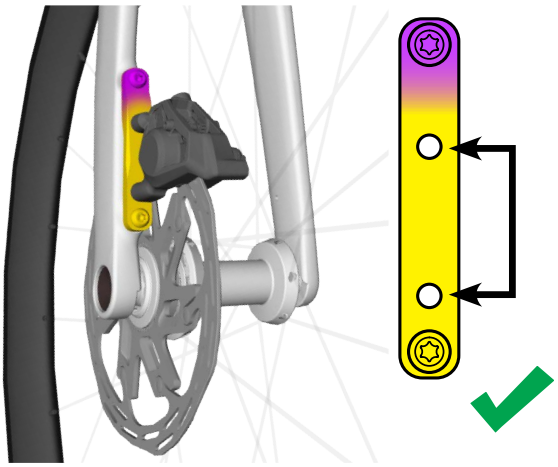

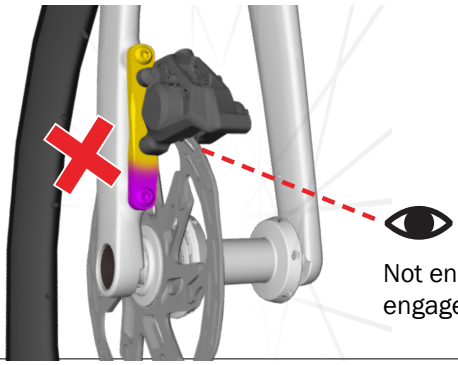

Not enough brake pad engagement

Rear	140 mm rotor	160 mm rotor

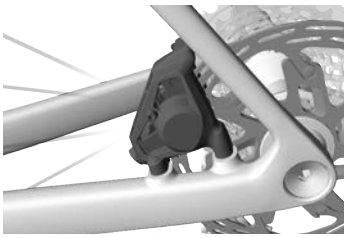

Do not use rear brake mount adapter.

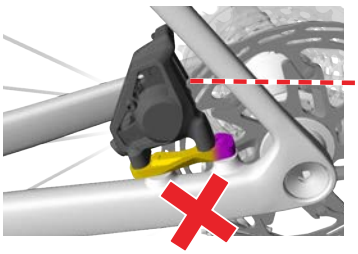

Not enough brake pad engagement

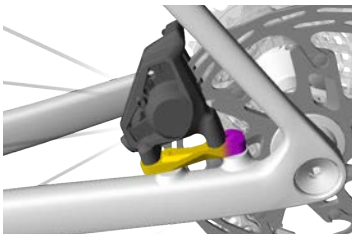

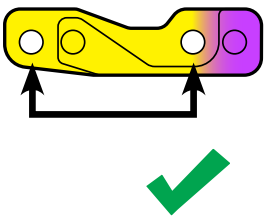

Fender mounts (optional)

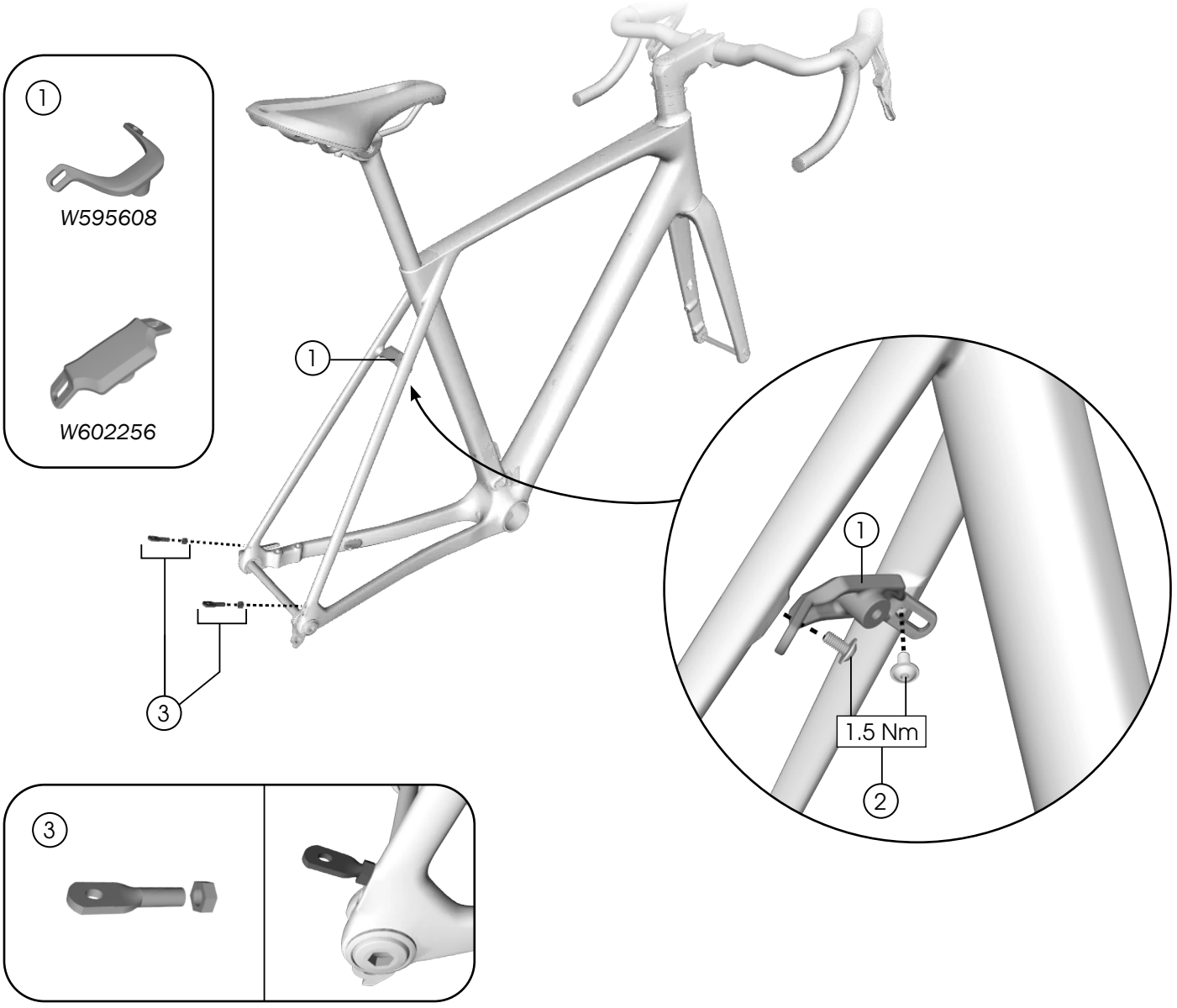

1. Fender bridge
   - *XS, S, M frame* — *W595608*
   - *ML, L, XL frame* — *W602256*
2. Fasteners (M4 x 8 mm) 2.5
3. Threaded fender stay mounts — *W317707*

Frame mounts

SL only
size M, ML, L, XL
have an additional plug on seat tube.

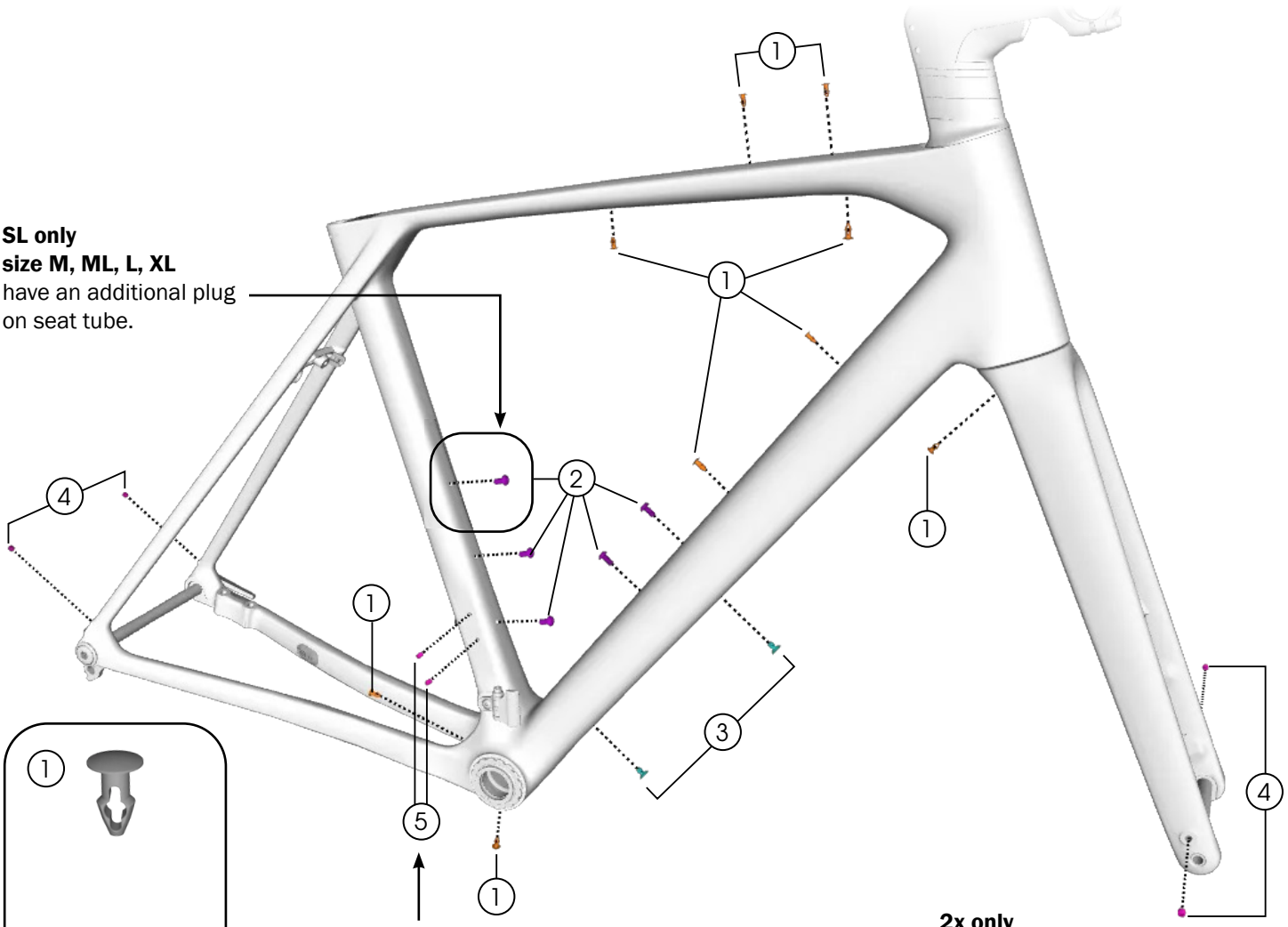

2x only

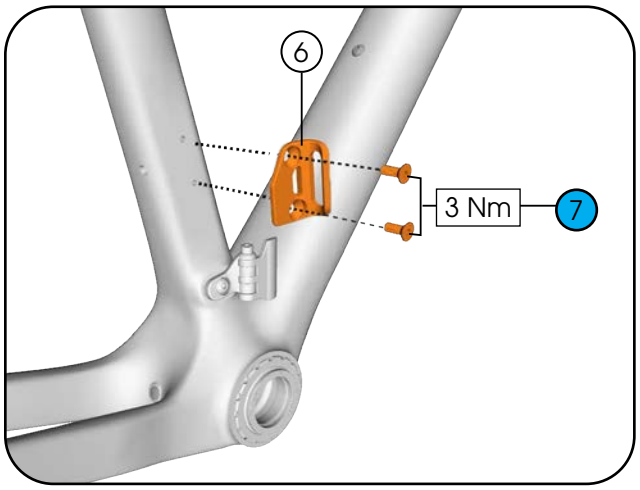

1. Plugs — *W308963*
2. Fasteners (M5 x 10) 4 — *5332051*
3. Plugs — *W5347207*
4. Set screws (M5 x 0.8 x5 mm) 25
5. Set screws (M4 x 0.7 x 6 mm) 2
6. Front derailleur hanger assembly — *5320961*
7. Fasteners (M4 x 10 mm) 3 — *5320961*

Bottles and bag

NOTE: Triangle bags and bottles are sold aftermarket.

The charts below show the largest bottles you can fit on each frame size with the bag installed.

XS

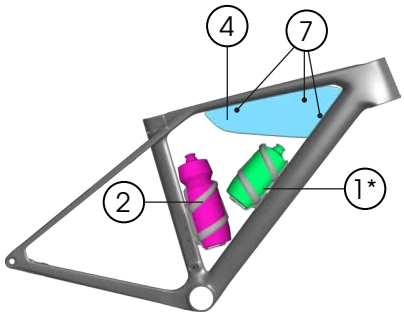

S

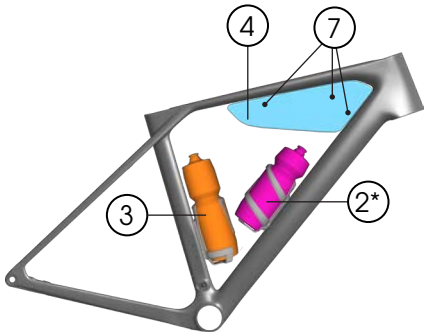

M

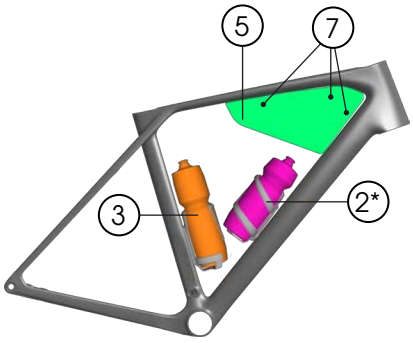

ML

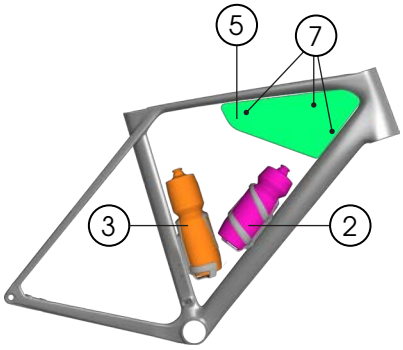

L

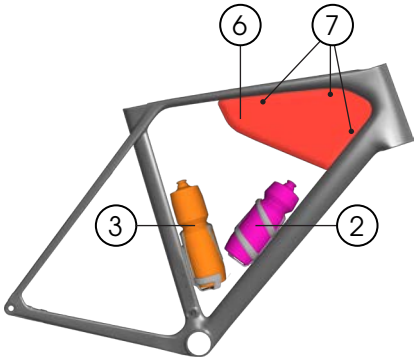

XL

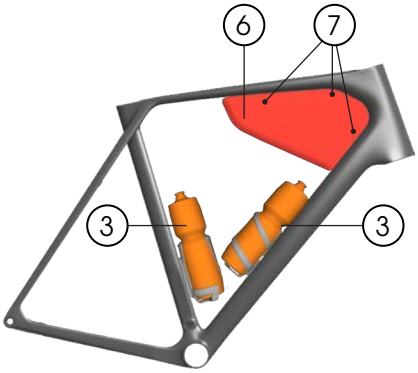

1. 15 oz (444 ml) bottle
2. 21 oz (621 ml) bottle
3. 26 oz (769 ml) bottle
4. Triangle bag, S (1 L) — *5323152*
5. Triangle bag, M (1.3 L) — *5323153*
6. Triangle bag, L (1.6 L) — *5323154*
7. Thumb screws for triangle bag — *5324792*

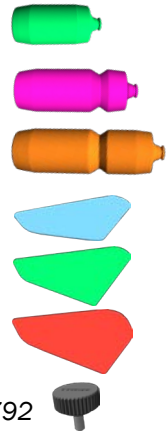

*requires a side-load cage

NOTE: All frame sizes can fit two 26 oz bottles without a bag. (XS frame requires side-load cages for this arrangement.)

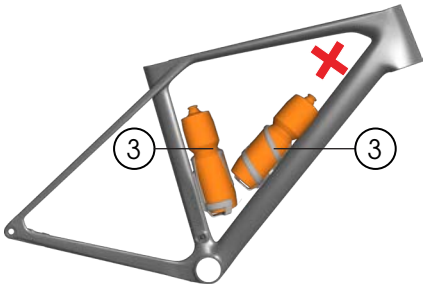

Specifications

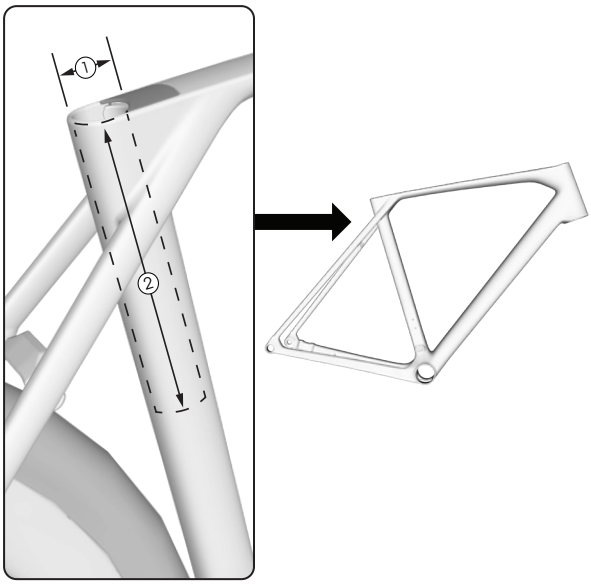

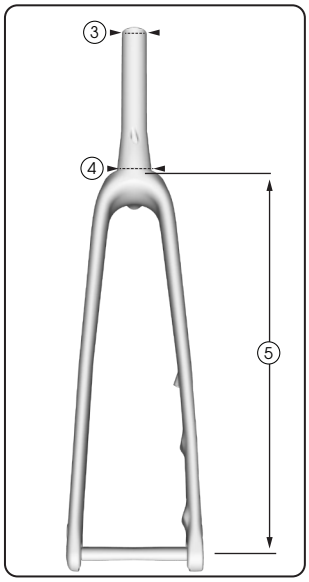

Seatpost

1	**Seatpost OD**	27.2 mm	
2	**Max insertion**	All frame sizes	195 mm
	Min insertion	Follow manufacturer's recommendation	

Fork

3	**Steerer tube OD, upper**	28.6 mm	
4	**Steerer tube OD, lower**	38.8 mm	
5	**Axle to crown**	XS, S, M	380 mm
		ML, L, XL	390 mm
	Fork offset	XS, S, M	53 mm
		ML, L, XL	48 mm
	Tapered steerer	1-1/8 upper	1-1/2 lower
	Bearings	IS52/40 upper	IS52/40 lower

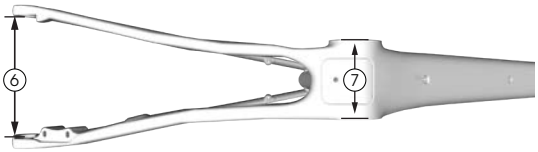

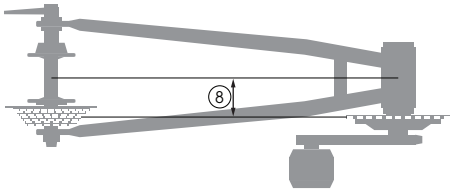

Frame

6	**Rear hub over-locknut-dimension (OLD)**	142 mm	
7	**Bottom bracket type/width**	T47/85.5 mm	
	Brake rotor OD min/max	Front	160/180 mm
	See also Brake mount adapters	Rear	140/160 mm
	Tire width	Without fender	*40 mm
		With fender	*35 mm

**as measured when the tire is seated on the rim*

Fender compatible	Front - Yes Rear - Yes
Dropper post compatible	No

Drivetrain	8 Chainline	Max chainring teeth (T)		
		Small	Large	Single (1x)
Shimano	44.5 mm	37T	55T	50T
SRAM	45 mm	37T	50T	50T

ID = inner diameter
OD = outer diameter

FRAME SIZES
XS = extra small
S = small
M = medium
ML = medium large
L = large
XL = extra large