

DOMANE SL/SLR GEN 4

SERVICE MANUAL

Contents

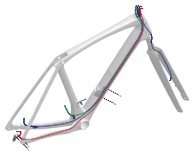
Routing — mechanical


Routing — mechanical: instructions

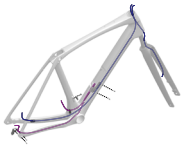
Routing — Di2

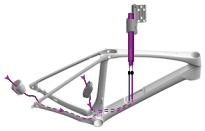
Routing — Di2: instructions


Routing — Di2 Domane RSL


Routing — eTap


Fork and headset

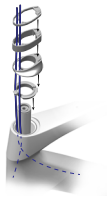
Install the headset


Fork and headset — standard stem


Seatpost


IsoSpeed


IsoSpeed: remove partsand install


Chainkeeper

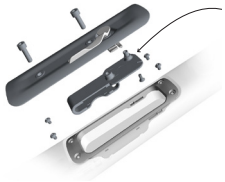
Storage door


Specifications

Safety

WARNING

Properly tighten hardware

Always tighten hardware to the specified torque. Over-tightening hardware could deform or break the hardware or components. Under-tightening hardware could cause hardware or components to become loose. Either situation could damage the bicycle and result in injury to the rider.

WARNING

Reapply threadlocker

All reused-fasteners with pre-applied threadlocker must be cleaned with isopropyl alcohol and have new thread-locker applied before re-assembly. If threadlocker is not applied, the fasteners may loosen which could damage the bicycle and result in injury to the rider.

Legend


Apply appropriate grease

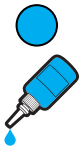
Apply threadlocker

Nm Torque

★ Cable (zip) tie

Copyright 2023 Trek Bicycle Corporation All Rights Reserved

Routing — mechanical

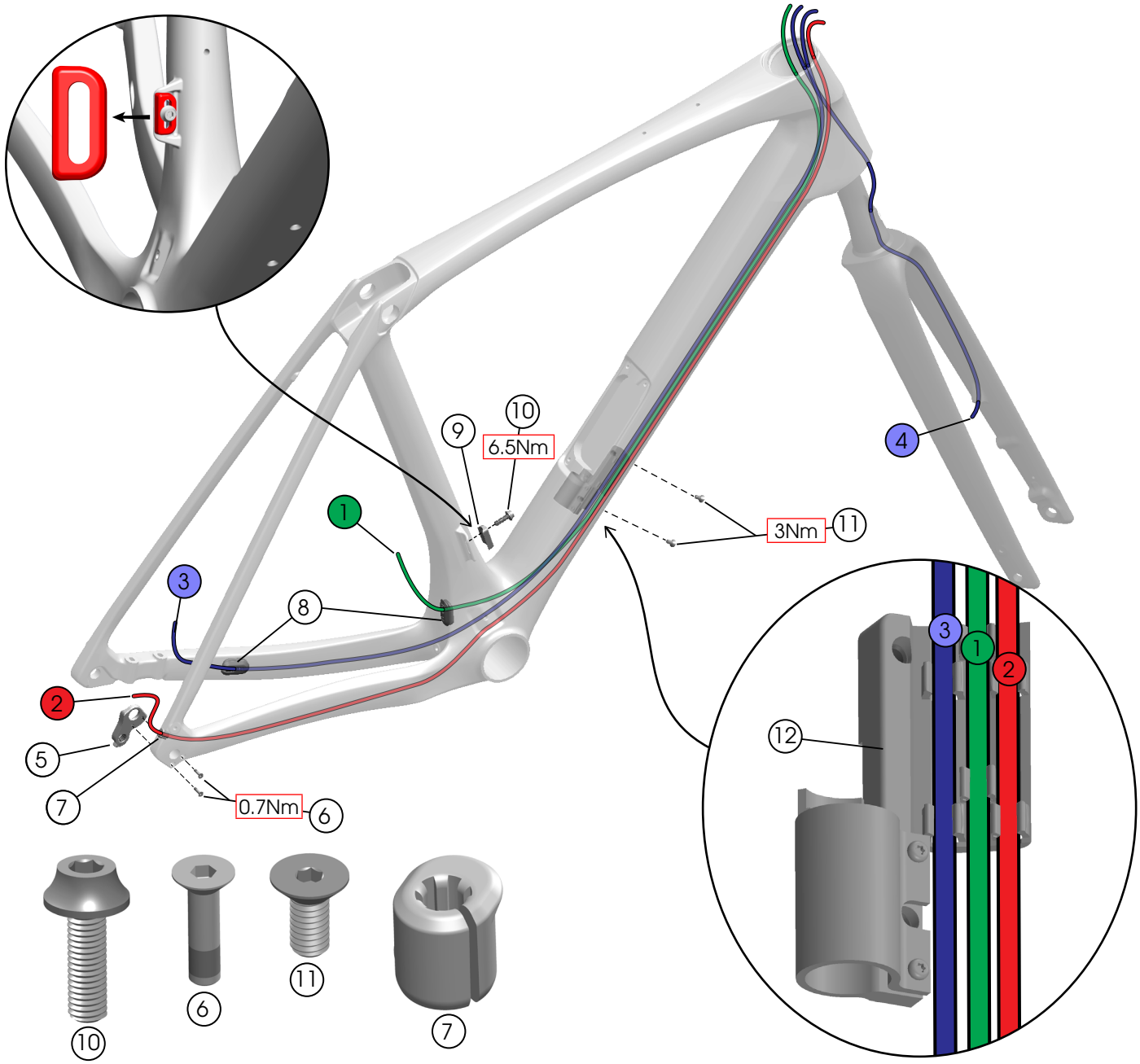

1. Front derailleur cable
2. Rear derailleur cable
3. Rear brake hose
4. Front brake hose
5. Rear derailleur hanger — W524188
6. Rear derailleur hanger bolts (M3x12mm) — W524884
7. Cable housing grommet — W329119
8. Housing grommets — W330578
9. Front derailleur hanger — W531901
10. Front derailleur hanger bolt (M5x16mm) — W543903
11. Cable guide bolts (M4x9mm) — W546731
12. Cable guide — W588188

Routing — mechanical: instructions

1. Route the brake hoses.

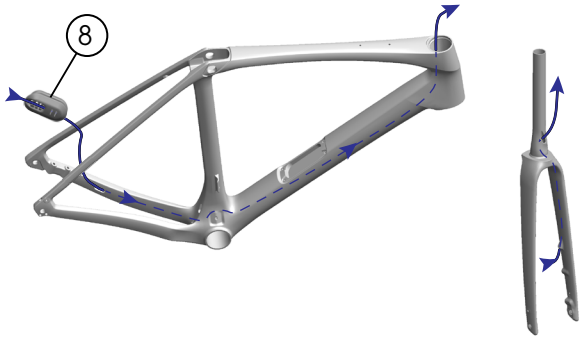

2. Route the shift housings.

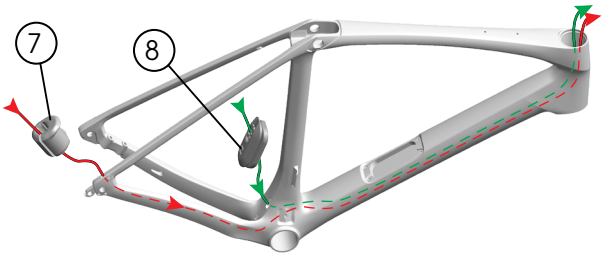

3. Insert the shift housings and rear brake hose into the cable guide.

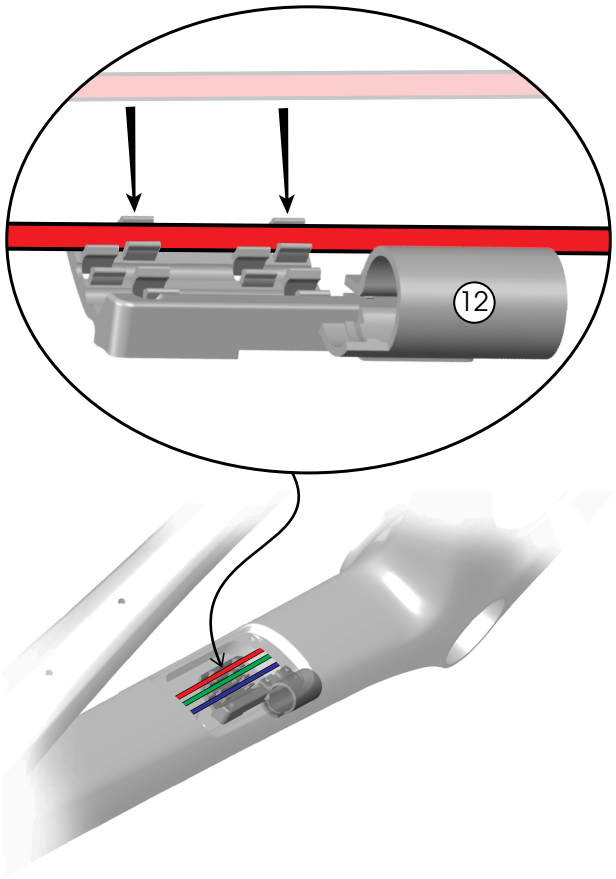

Routing — Di2

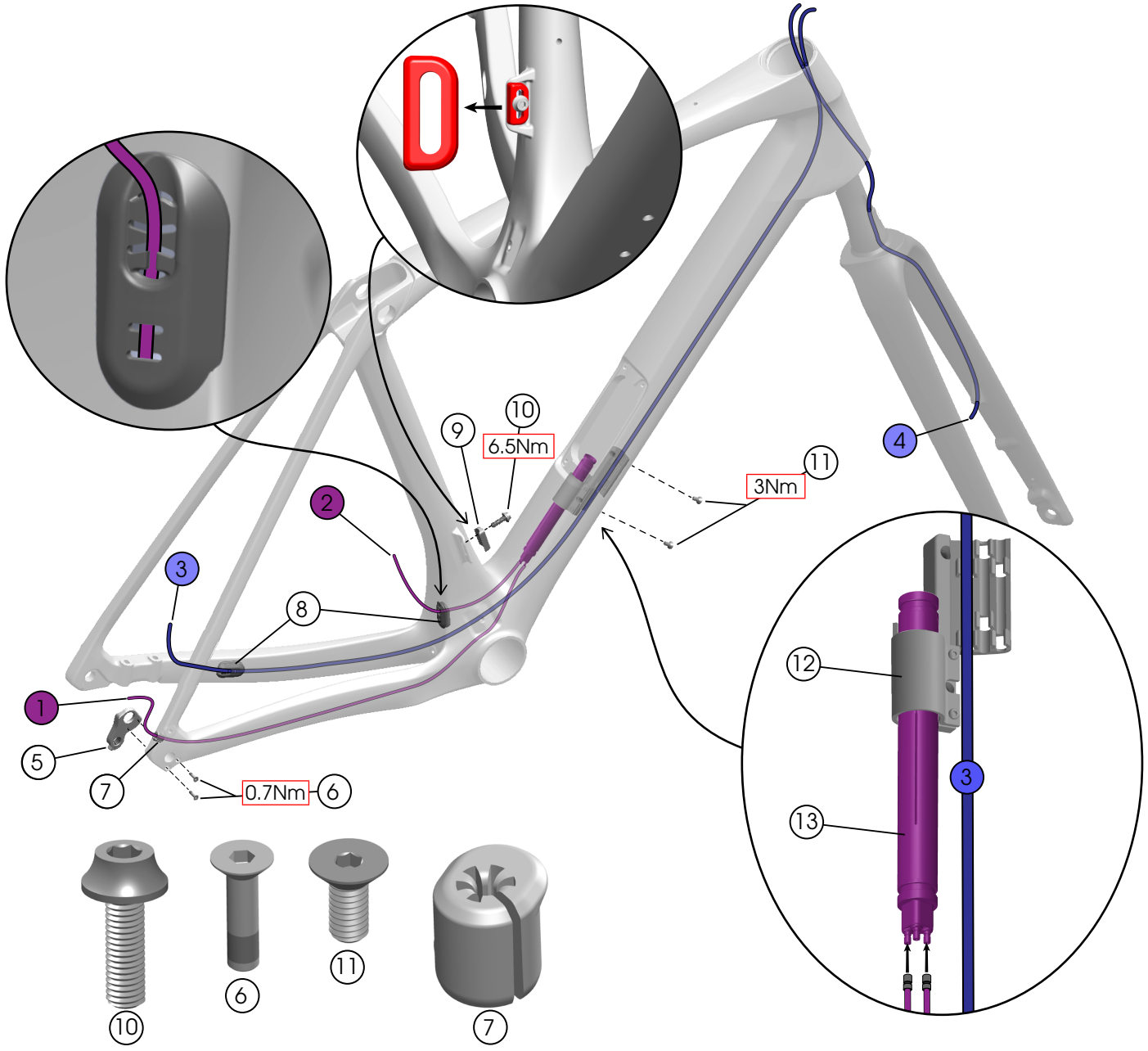

1. Rear Di2 wire
2. Front Di2 wire

EW-SD300-I

3. Rear brake hose
4. Front brake hose
5. Rear derailleur hanger — W524188
6. Rear derailleur hanger bolts (M3x12mm) — W524884
7. Di2 wire grommet — W317292
8. Housing grommets — W330578
9. Front derailleur hanger — W531901
10. Front derailleur hanger bolt (M5x16mm) — W543903
11. Cable guide bolts (M4x9mm) — W546731
12. Cable guide — W588188
13. Di2 battery — *BTDN300*

Routing — Di2: instructions

1. Route the brake hoses.

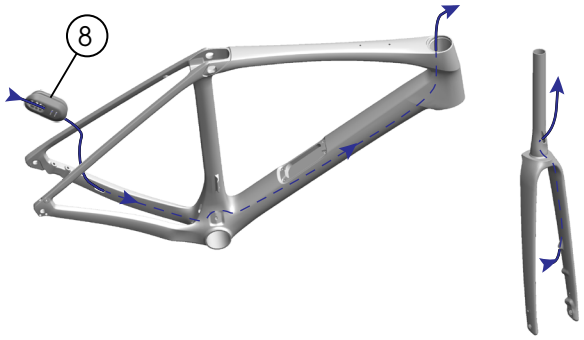

2. Route the Di2 wires through the frame and connect them to the battery.

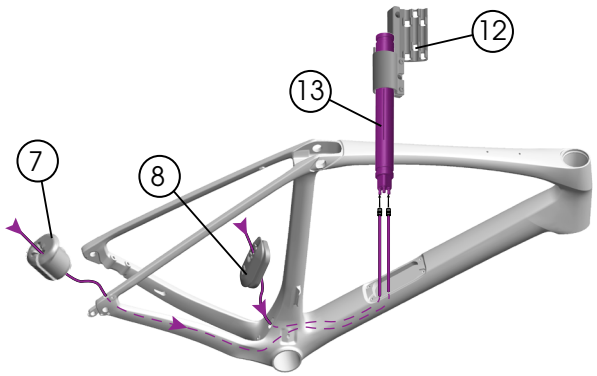

3. Install the battery assembly.

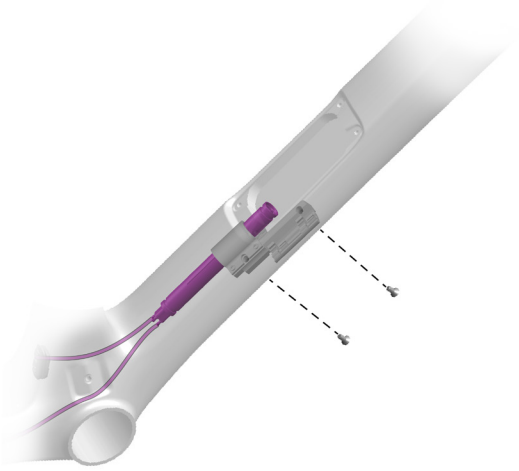

4. Insert the rear brake hose into the cable guide

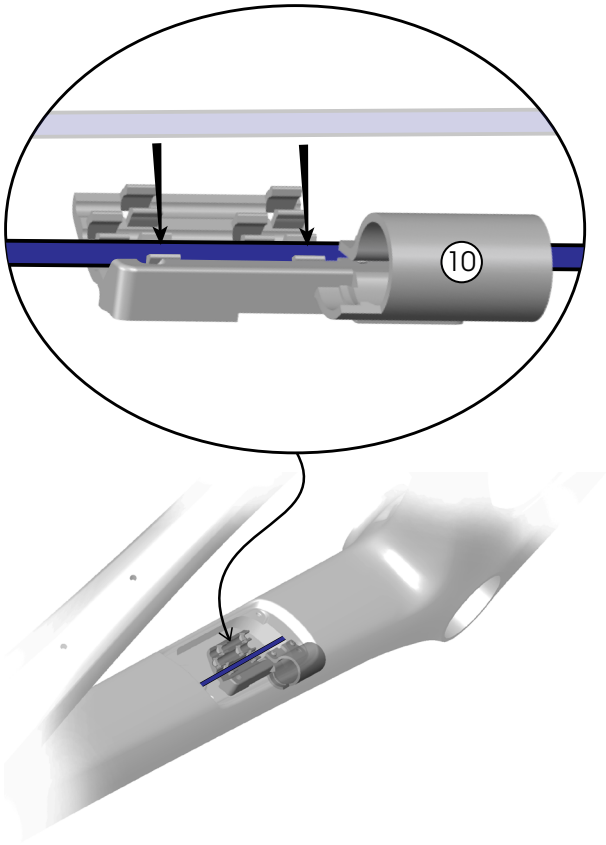

Routing — Di2 Domane RSL

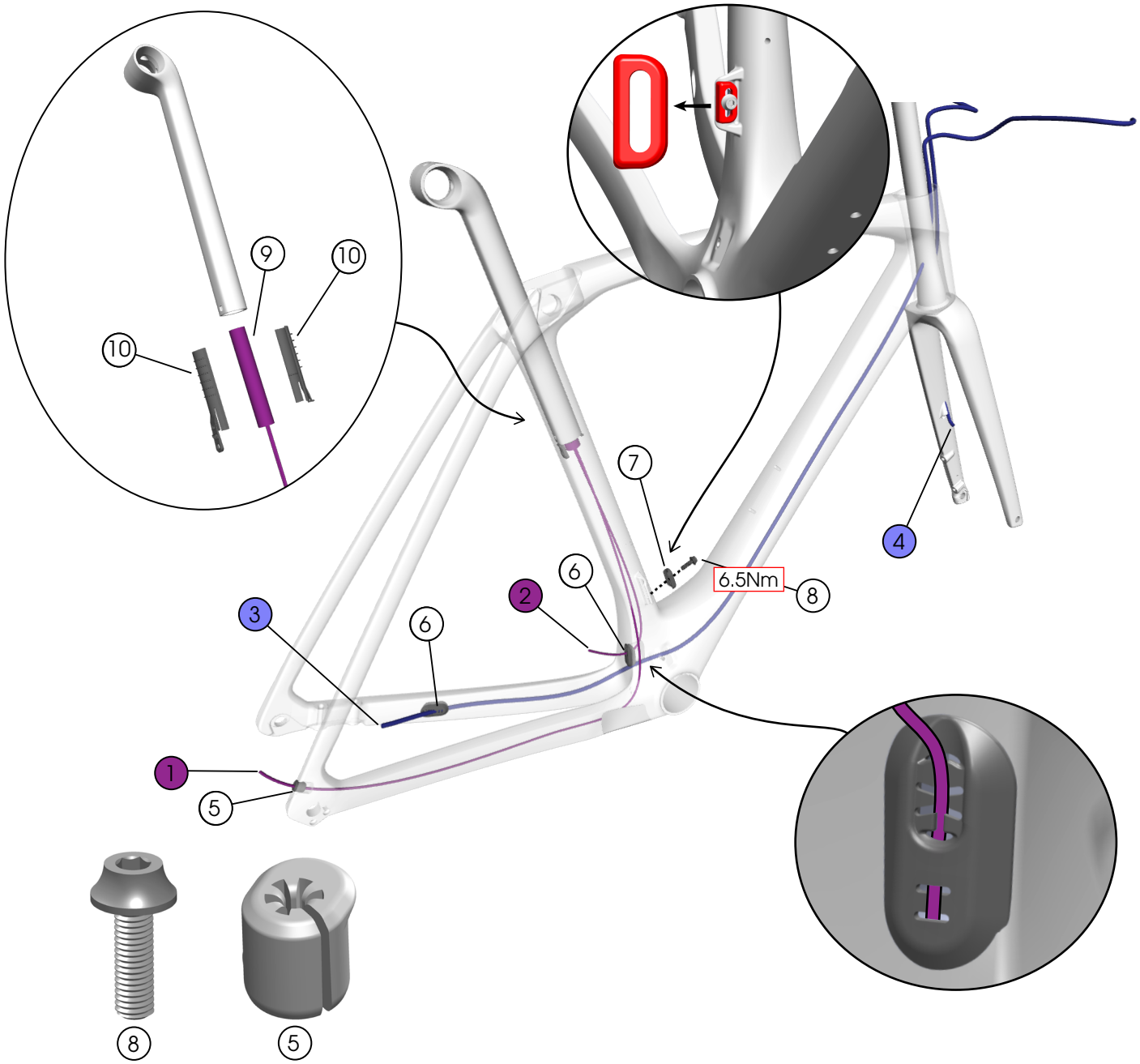

1. Rear Di2 wire
2. Front Di2 wire

EW-SD300-I

3. Rear brake hose
4. Front brake hose
5. Di2 wire grommet — *W317292*
6. Housing grommets — *W330578*
7. Front derailleur hanger — *W531901*
8. Front derailleur hanger bolt (M5x16mm) — *W543903*
9. Di2 battery — *BTDN300*
10. Di2 battery holder — *W5290297*

Routing — eTap

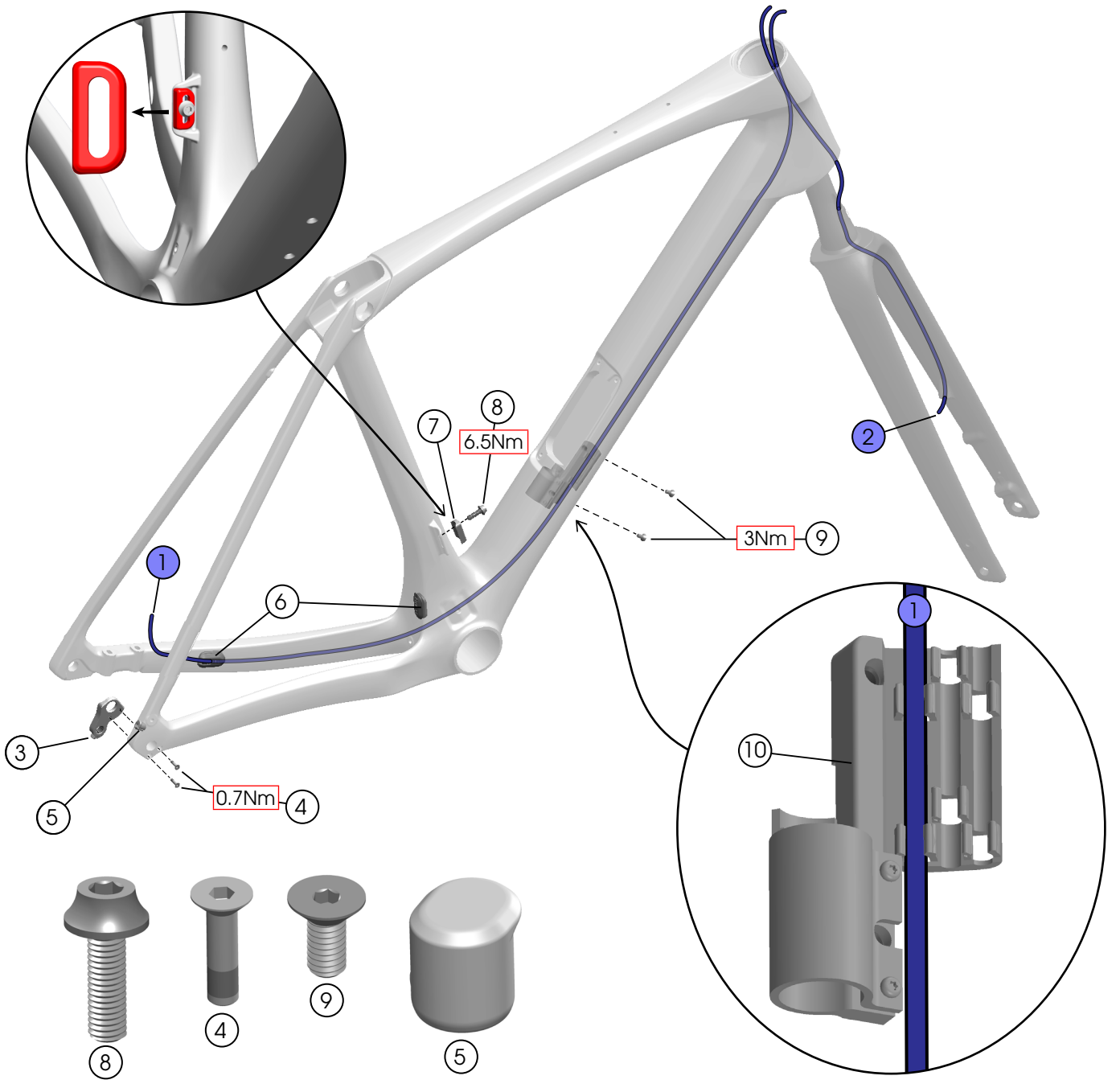

1. Rear brake hose
2. Front brake hose
3. Rear derailleur hanger — W524188
4. Rear derailleur hanger bolts (M3x12mm) — W524884
5. eTap hole plug — W547906
6. Housing grommets — W330578
7. Front derailleur hanger — W531901
8. Front derailleur hanger bolt (M5x16mm) — W543903
9. Cable guide bolts (M4x9mm) — W546731
10. Cable guide — W588188

Routing — eTap: instructions

1. Route the brake hoses.

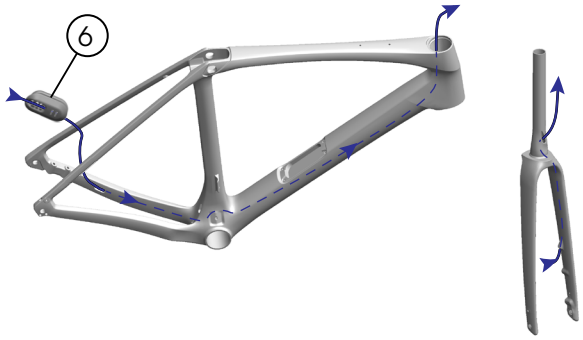

2. Insert the rear brake hose into the cable guide.

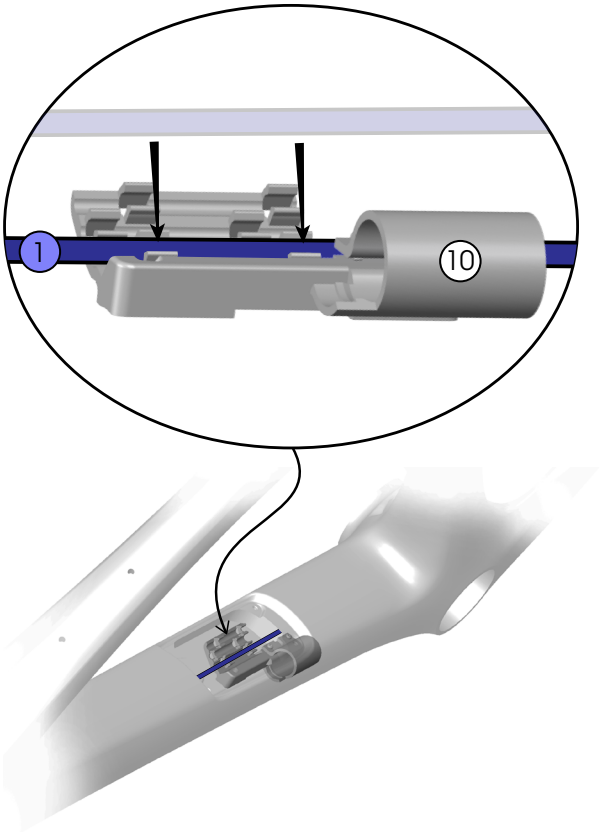

Fork and headset

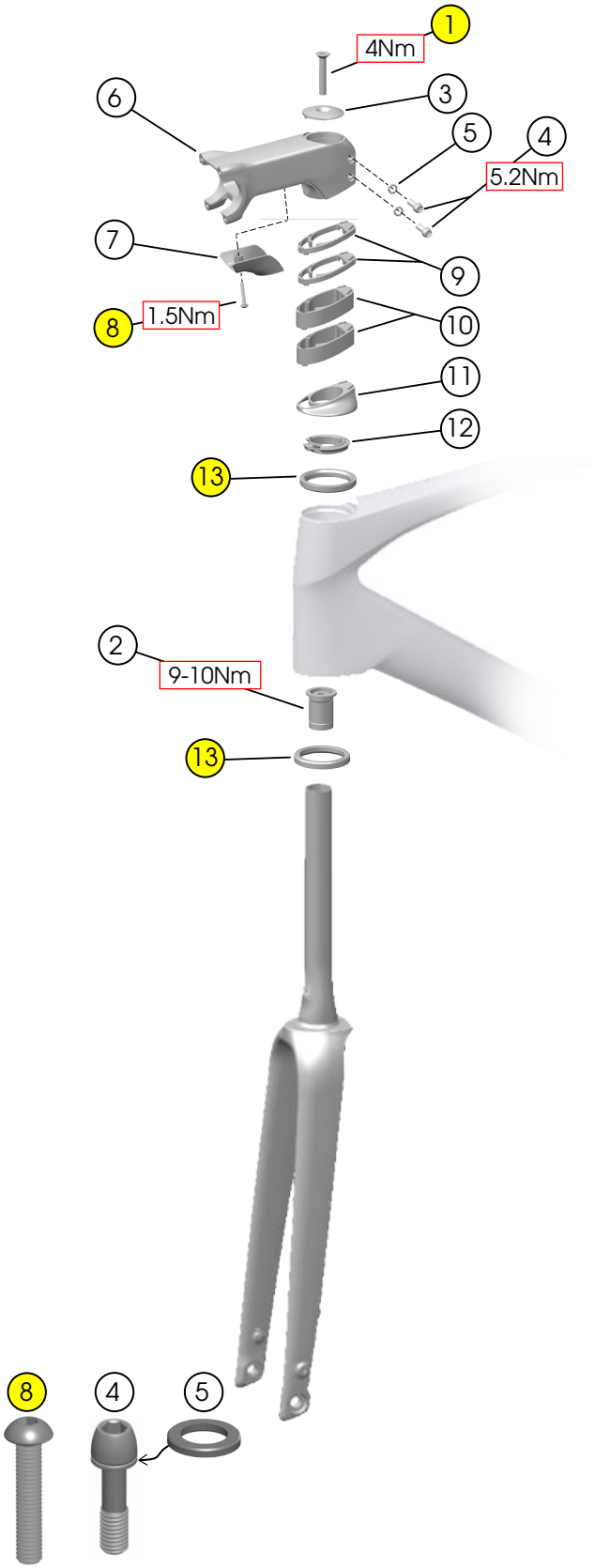

1. Top cap bolt (M6x35mm)
2. Compression plug

[W547432]

3. Top cap — [W5274966]
4. Stem bolts (M5x15mm)
5. Washers (M5)

[5305331]

6. Stem — [5274584]
7. Routing cover — [W5274600]
8. Bolt (M4x25mm) — [W5274963]
9. Spacers (5mm) — [5296906]
10. Spacers (15mm) — [5296905]
11. Bearing cover — [W5274267]
12. Split ring — [W5274269]
13. Headset bearings — [W540243]

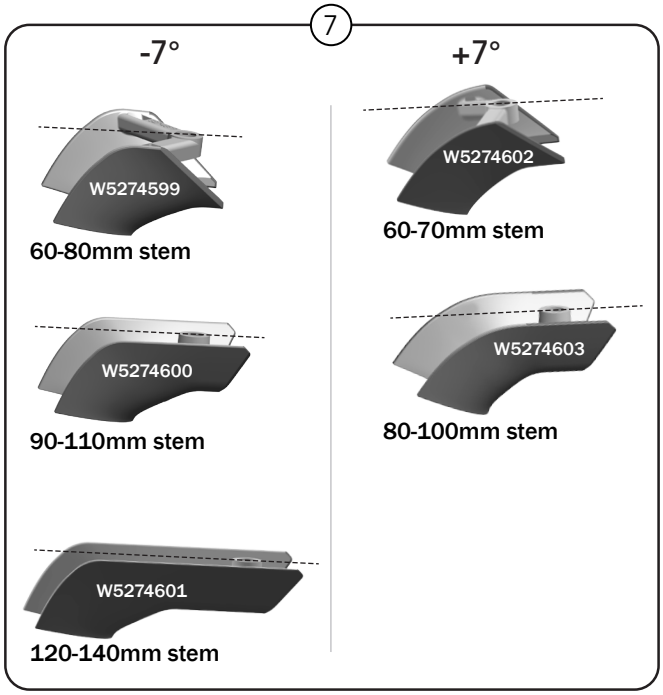

Fork and headset: max spacers

WARNING

Below the stem

Do not exceed 40mm of headset spacers below the stem. If there are more than 40mm of spacers, the steerer tube could become damaged and break, causing a crash resulting in injury.

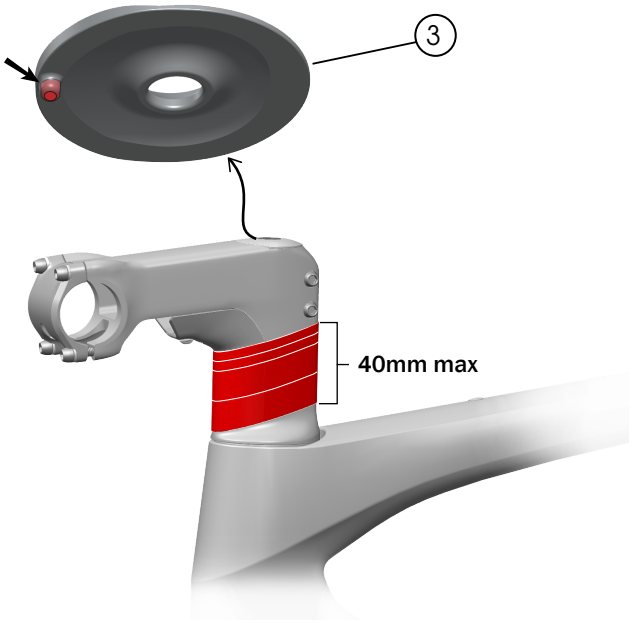

WARNING

Above the stem

Do not exceed 40mm of headset spacers above the stem. If there are more than 40mm of spacers, the steerer tube could become damaged and break, causing a crash resulting in injury.

NOTE: If you add spacers above the stem, you must use a standard top cap (without the indent).

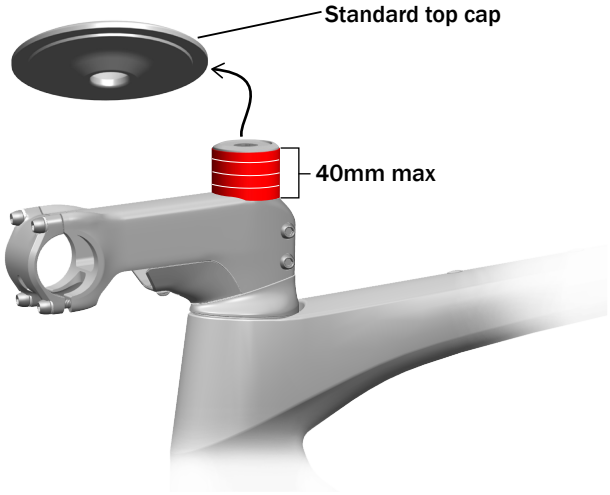

Install the fork

1. Install the compression plug in the fork.

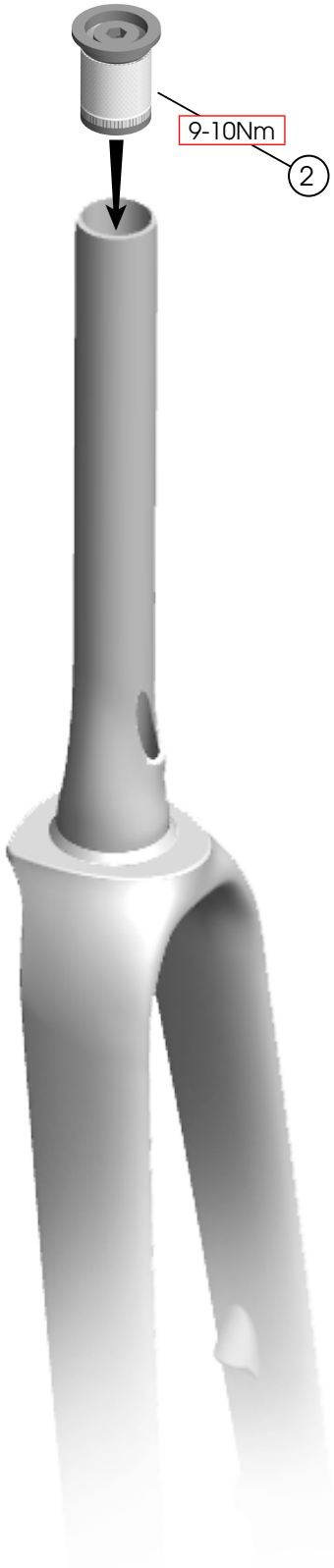

2. Grease the fork crown race, both headset bearing bores, and both bearings (13).

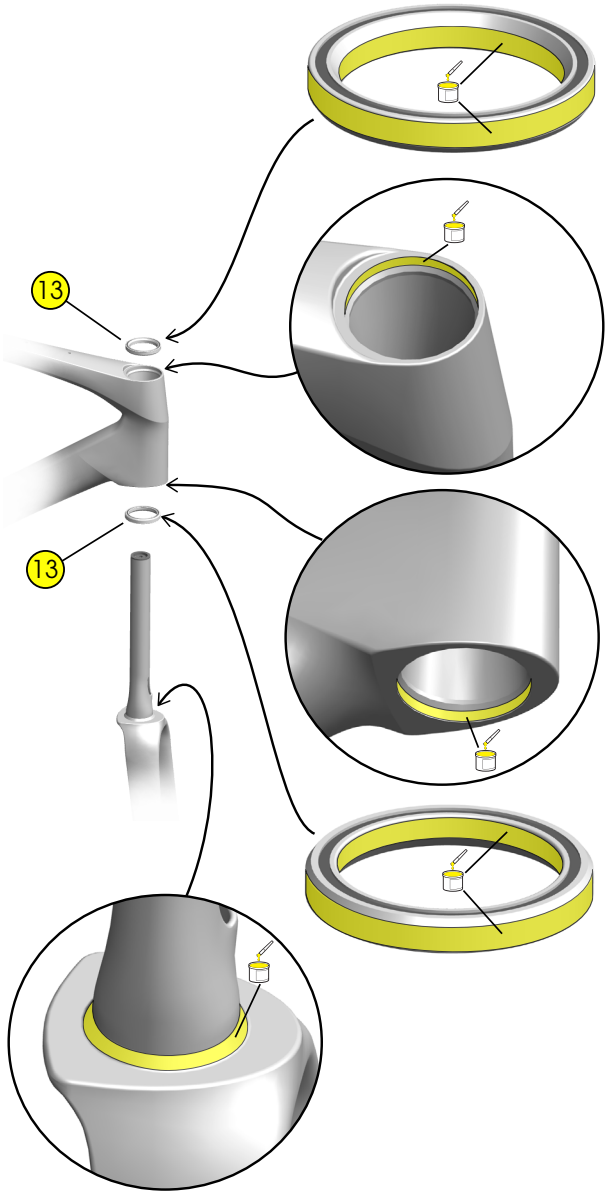

3. Insert the fork into the head tube.

TIP: Use a sprint stand to hold the fork in place.



Install the headset

1. Route the headset parts down the housings.

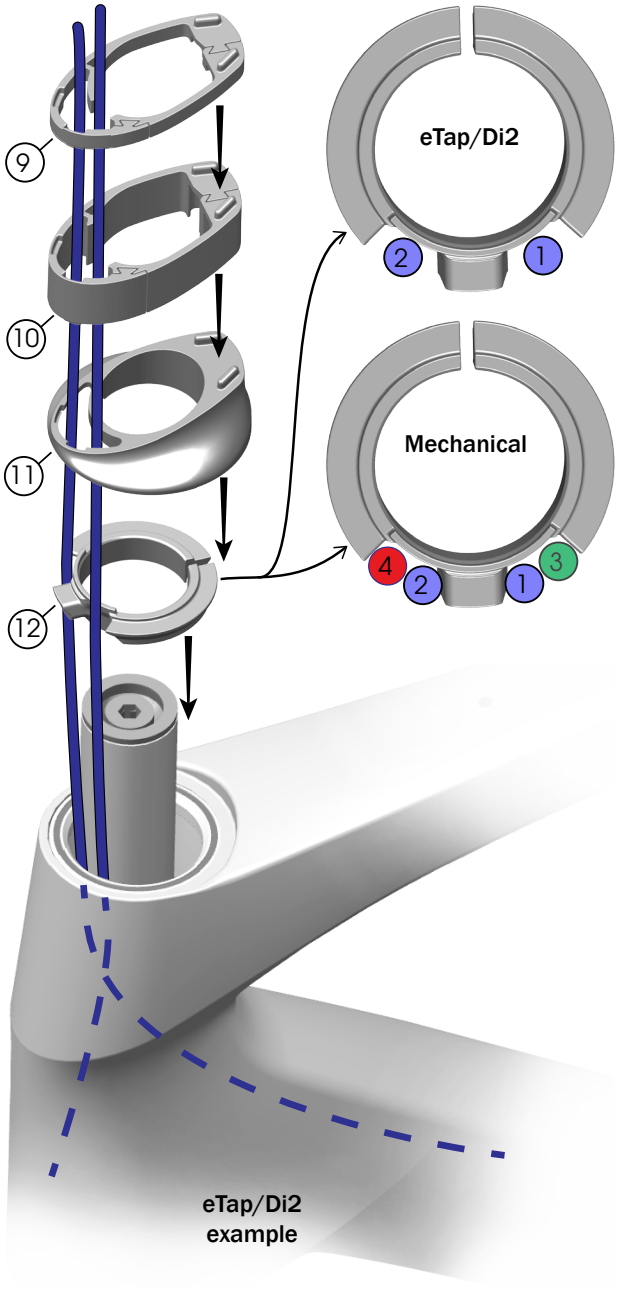

2. Loosely attach the stem (6).
3. Install the top cap (3) and tighten the top cap bolt (1).

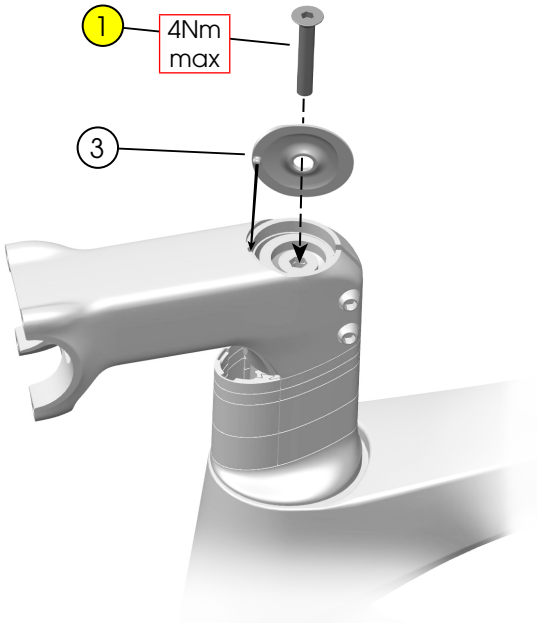

4. Tighten the stem bolts (4) — alternating between them — until both are torqued to 5.2Nm.
5. Install the routing cover (7).

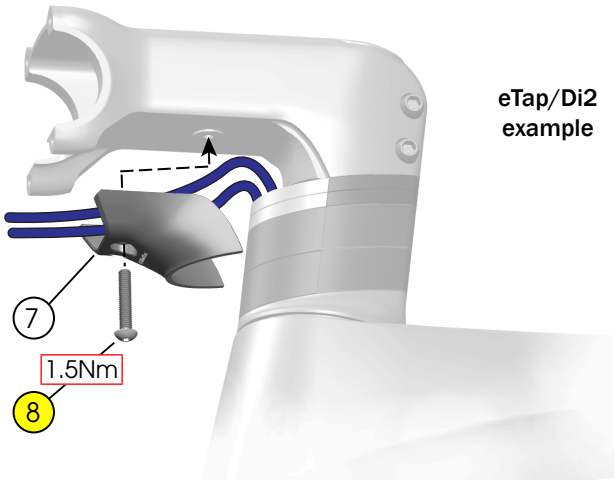

1. Front brake hose
2. Rear brake hose
3. Front derailleur cable housing
4. Rear derailleur cable housing

Fork and headset — standard stem

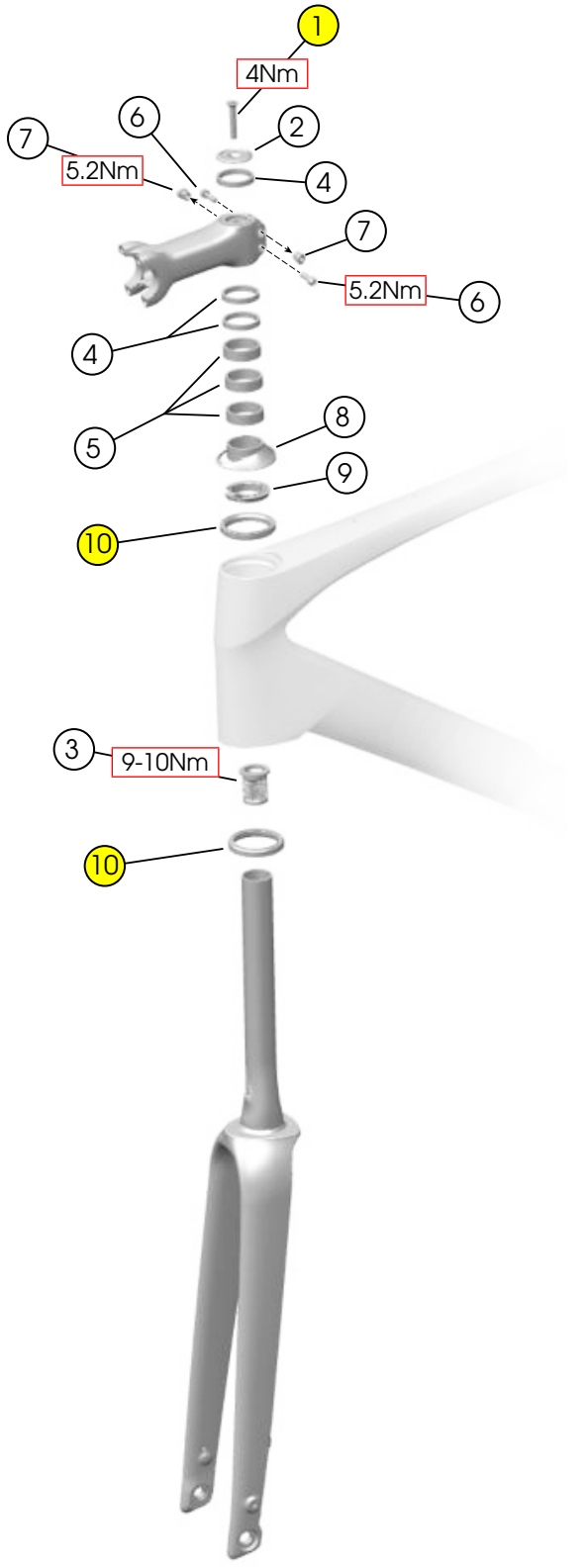

1. Top cap bolt
2. Top cap
3. Compression plug

W547432

4. Spacers (5mm) — *5253930*
5. Spacers (10mm) — *5253931*
6. Stem bolts (M5x18.5mm)
7. D-nuts (M5)

5276082

8. Bearing cover (standard stem) — *W5274615*
9. Split ring — *W5274269*
10. Headset bearings — *W540243*

Seatpost

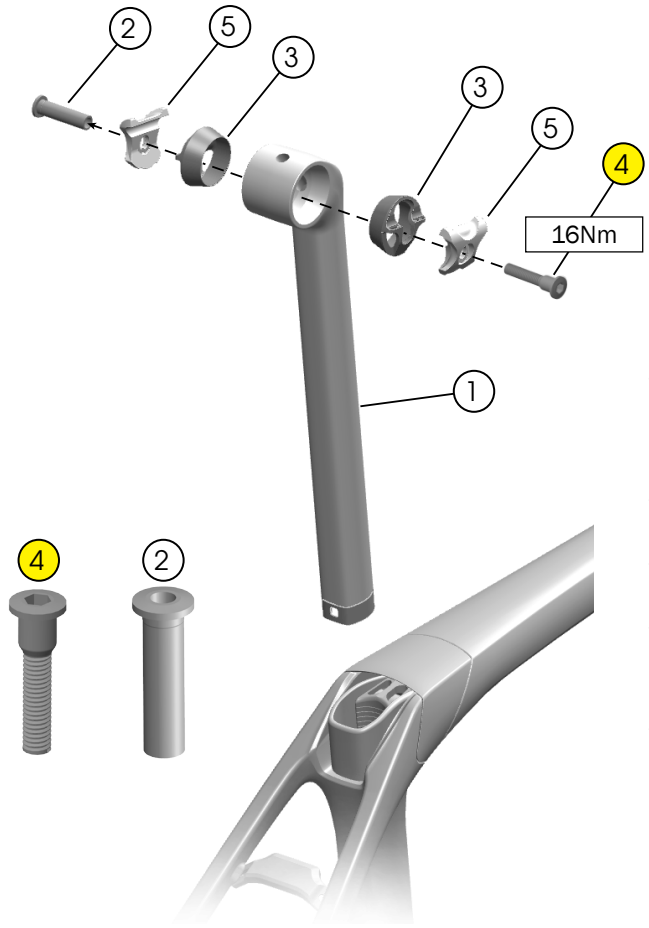

- 1 Seatpost
  - Short — *W5285077**
  - Long — *W5285078**
  - Short (20mm offset) — *W5285075**
  - Tall (20mm offset) — *W5285076**
- 2 Bolt insert
- 3 Barrels
- 4 Bolt (M6x16mm)

  — *272628*
- 5 Saddle clamp ears
  - (7mmx7mm) — *436657*
  - (7mmx9mm) — *406923*
  - (7mmx10mm) — *436658*

Minimum insertion

The seatpost must be inserted into the seat tube far enough that the minimum insertion line is at or below the top tube (as shown below).

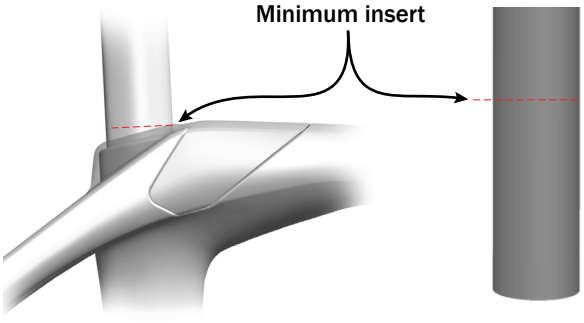

Maximum insertion

NOTICE: Do not lower the seatpost all the way to the stop point — this can inhibit IsoSpeed movement and cause damage to the seatpost. There must be at least a 5mm gap between the bottom of the seatpost and the stop bar.

NOTE: For exact measurements (BB to saddle rails), see the Geometry table on Trekbikes.com.

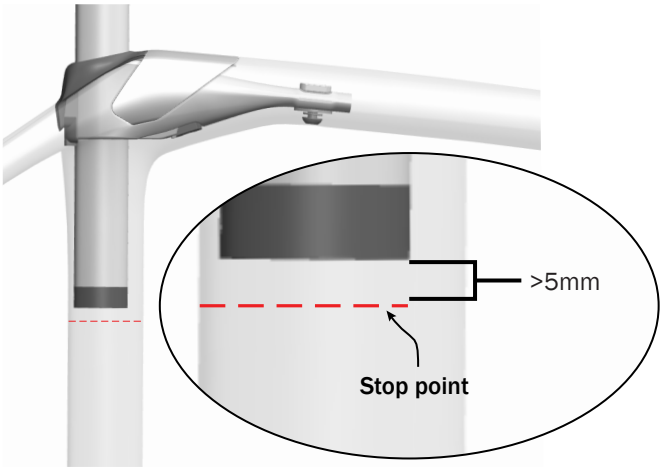

IsoSpeed

NOTICE: Do not perform routine maintenance on the IsoSpeed. Only service IsoSpeed hardware if you are replacing parts or torquing the pivot bolt (5).

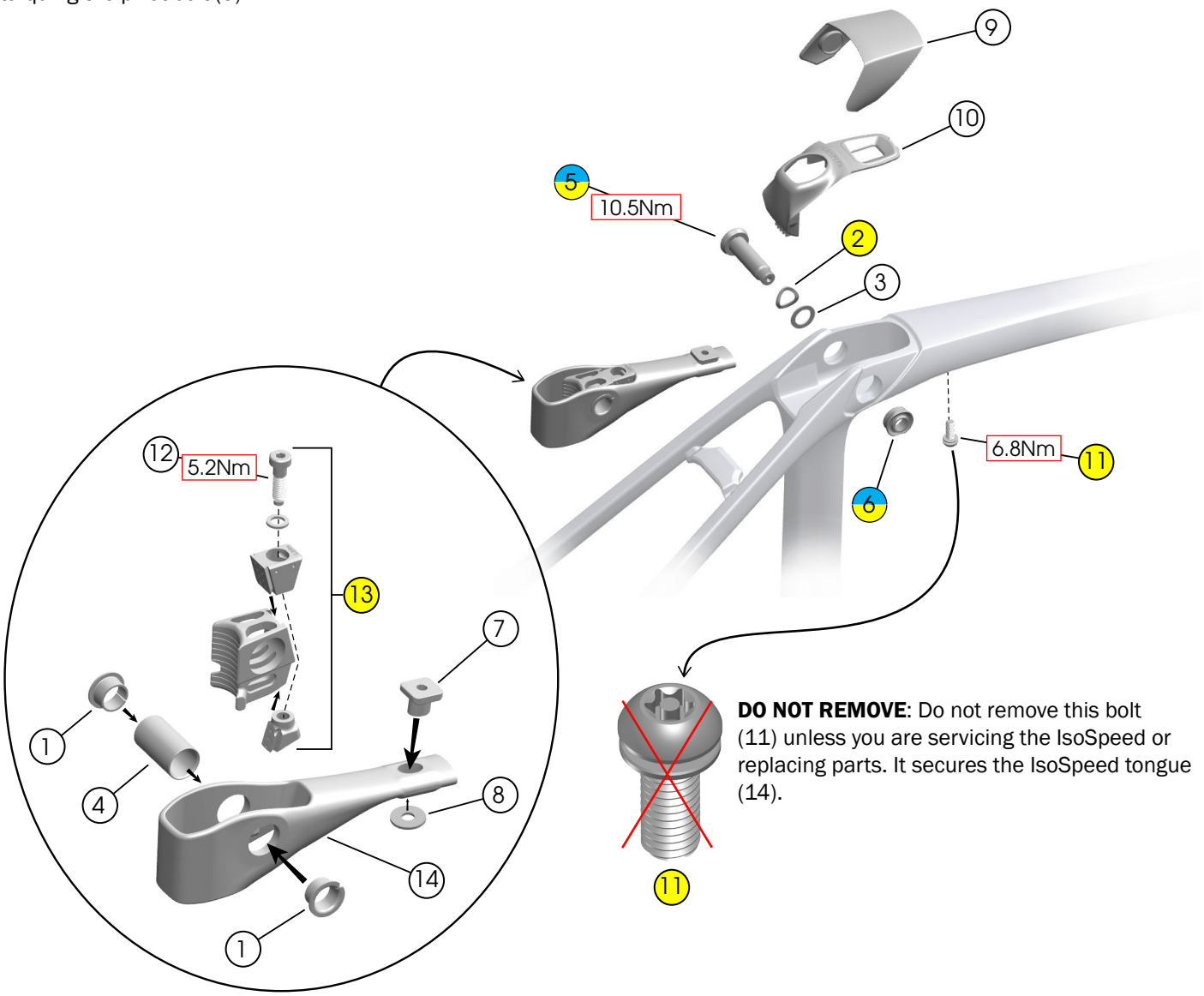

DO NOT REMOVE: Do not remove this bolt (11) unless you are servicing the IsoSpeed or replacing parts. It secures the IsoSpeed tongue (14).

1. Flanged bushings — W5256074
2. Wave washer (M10)
3. Washer (M10)
4. Cylindrical bushing
5. Pivot bolt (M10)
6. Nut (M10)

(2–6) — 5296536

7. T-nut — W5260276
8. Washer (M6) — W5260277
9. *IsoSpeed cover (black) — W5297965
10. Wedge cover — W5269805
11. Bolt, T25 tamper-resistant (M6x16mm) — W5280089
12. Bolt (M6x22mm)
13. Wedge assembly parts

(12–13) — W5275256

14. IsoSpeed tongue (44-47cm) — W5284403

**This is a color-matched part — search trekbikes.com to find the right color for your bike.*

IsoSpeed: remove parts

NOTICE: Do not perform routine maintenance on the IsoSpeed. Only service IsoSpeed hardware if you are replacing parts.

1. Remove the assembly cover (9).

   NOTICE: Use your fingers to remove the cover. Do not use a tool or you could scratch the paint.

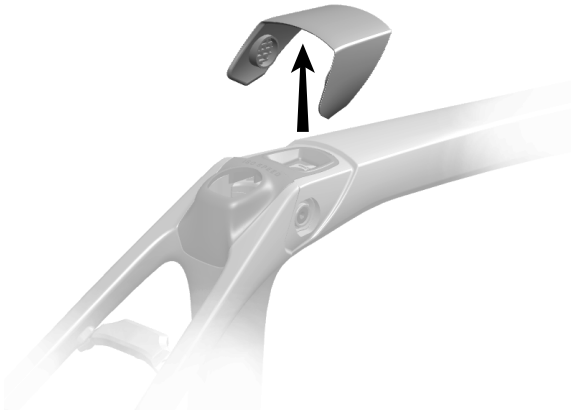

2. Remove the pivot bolt (5), washers (2, 3), and the nut (6).

   NOTICE: Do not continue removing the pivot bolt (5) if the nut rotates (6) — this could damage the frame pockets. If necessary, use a shim to hold the nut (6) in place while removing the pivot bolt (5).

3. Remove the rest of the IsoSpeed parts as shown on page 14.

IsoSpeed: install parts

NOTICE: Do not perform routine maintenance on the IsoSpeed. Only service IsoSpeed hardware if you are replacing parts.

IMPORTANT: Clean all parts before reinstalling them using 50/50 isopropyl/water mix.

1. Grease the wedge assembly as shown below.

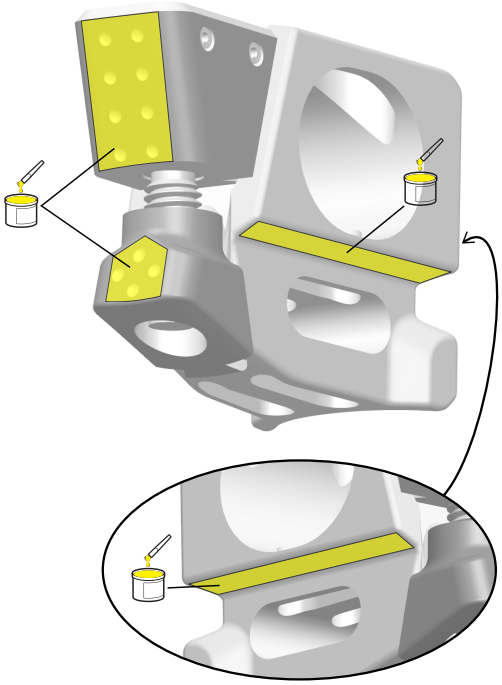

2. Assemble the tongue assembly (see page 14) and insert it into the frame. Insert and torque the bolt (11).

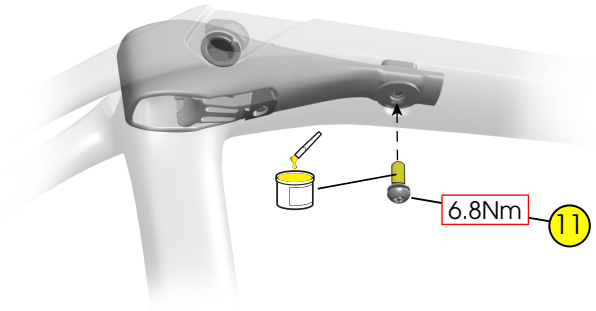

3. Apply threadlocker to the pivot bolt (5) and nut (6) threads.

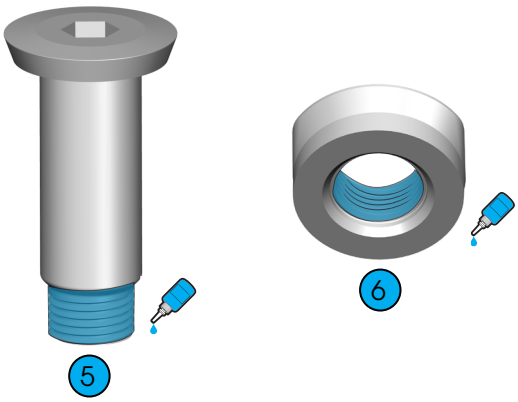

4. Place the wave washer (2) on the pivot bolt (5) and apply grease as shown below.

   NOTE: Do not apply grease to the frame pockets or bushings. The grease could contact the pivot bolt threads.

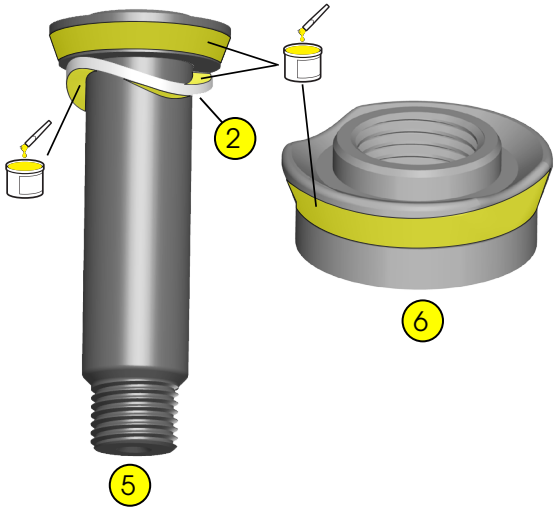

5. Install the nut (6) and pivot bolt (5). Torque the bolt to 10.5 Nm.

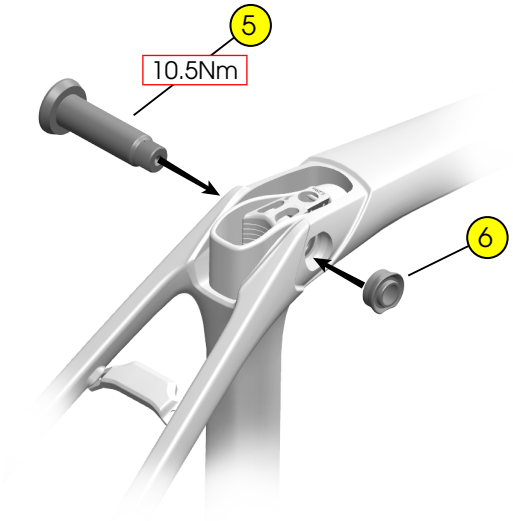

Chainkeeper

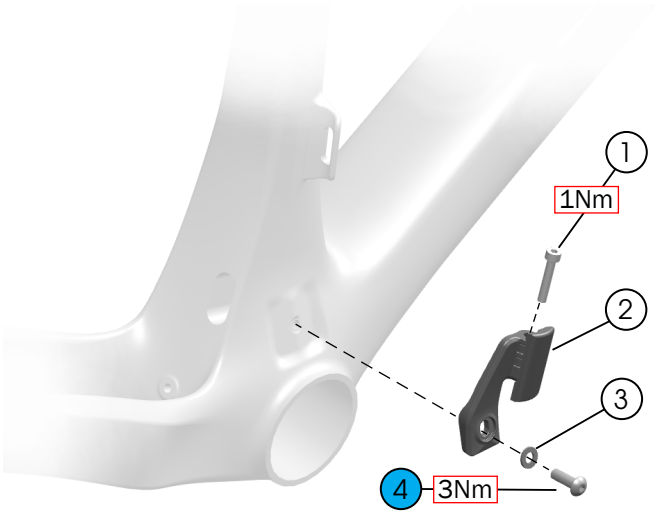

1. Bolt (M4x22mm)
2. Chainkeeper
3. Flat washer (M5x10mm)
4. Bolt (M5x16mm)

5305773

Adjust the chainkeeper

1. Shift to the lowest gear (largest rear cassette cog) and inner chainring.
2. Loosen the bolt (1) on the chainkeeper.
3. Rotate the loose piece (shown in red below) so there is 1mm of horizontal clearance to the chain.

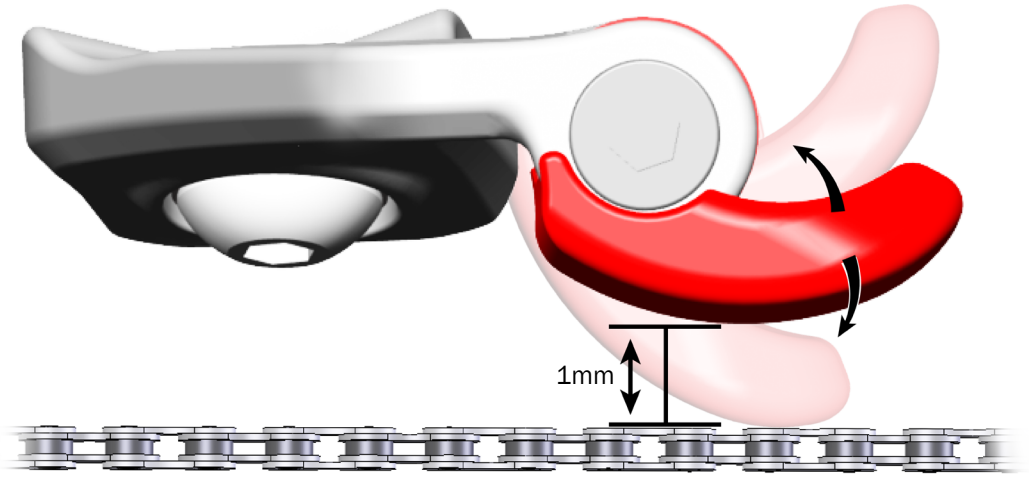

4. Tighten the bolt (1) to 1Nm.

Storage door

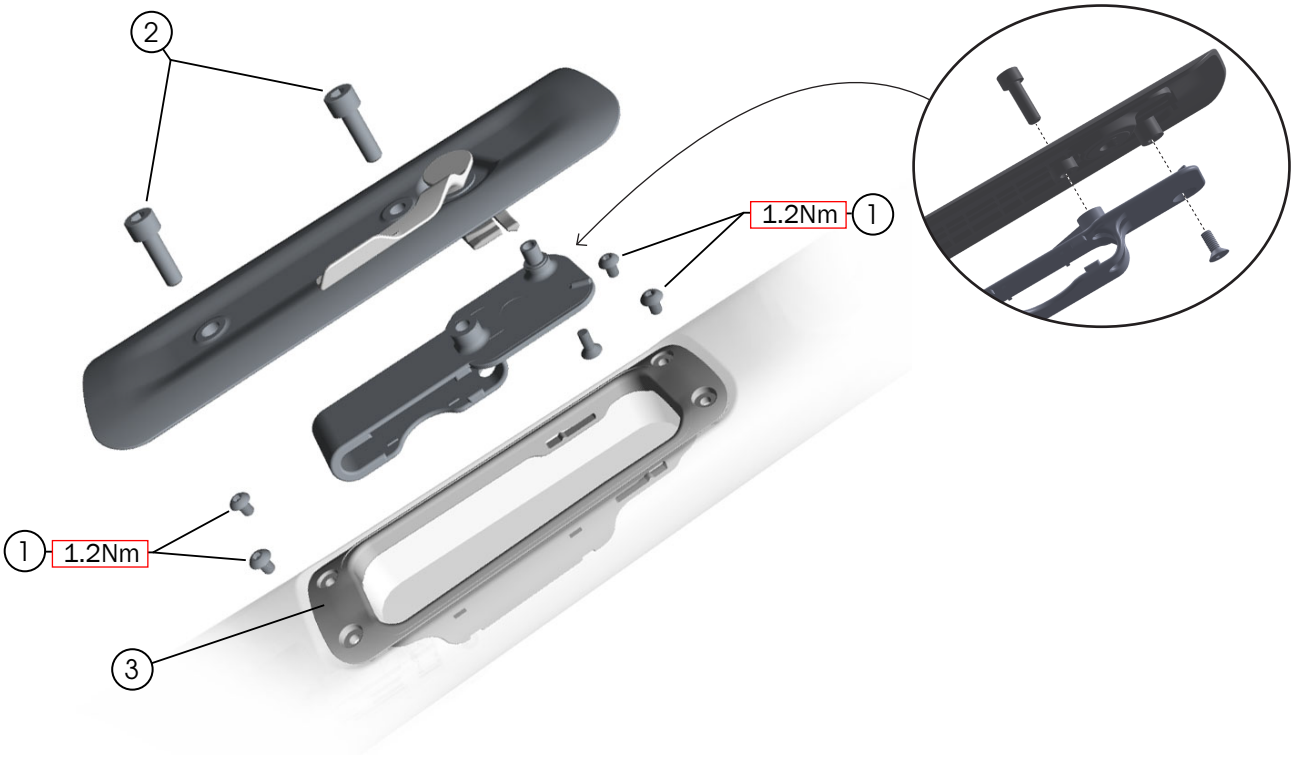

1. Mount screws — W547053
2. Bolts (M5x16mm) — W596821

*Storage door kit**

3. Door frame — W580769

**This is a color-matched part — search trekbikes.com to find the right color for your bike.*

Specifications

Frame

	SL/SLR
Rear hub OLD	142mm
Front hub OLD	100mm
Upper fork steerer tube OD	28.6mm
Lower fork steerer tube OD	38.1mm
Bottom bracket type/width	T47/85.5mm
Brake rotor diameter min/ max	140/160mm
Tire width max 700c	38mm
Tire width max 700c (with fenders)	35mm
Fender compatible — rear	Yes
Fender compatible — front	Yes

Chainline/chainring

	Chainline	Max chainring teeth (T)		
		Small	Large	Single (1x)
Shimano	43.5mm	—	—	50t
	43.5mm	36T	52T	—
SRAM	43.5mm	—	—	50T
	43.5mm	33T	52T	—

Brake hose lengths (caliper to lever)

NOTE: The lengths below are based on a 100mm stem with 40mm of headset spacers below the stem.

Frame size	Rear brake	Front brake
50cm	1,440mm	815mm
52cm	1,460mm	830mm
54cm	1,480mm	845mm
56cm	1,500mm	860mm
58cm	1,526mm	880mm
60cm	1,557mm	905mm
62cm	1,588mm	930mm

Wire lengths — Di2 (derailleur to battery)

Frame size	Rear derailleur	Front derailleur
50cm	700mm	250mm
52cm	700mm	250mm
54cm	700mm	250mm
56cm	700mm	250mm
58cm	700mm	250mm
60cm	700mm	250mm
62cm	700mm	250mm

Housing lengths — mechanical (derailleur to lever)

Frame size	Rear derailleur	Front derailleur
50cm	1,590mm	1,240mm
52cm	1,610mm	1,260mm
54cm	1,630mm	1,280mm
56cm	1,650mm	1,300mm
58cm	1,675mm	1,325mm
60cm	1,710mm	1,360mm
62cm	1,740mm	1,390mm