DOMANE+ LT

ENGINEERED BY TREK BICYCLE Co. • WATERLOO, WI, USA • EST. 1976

POWER 250W PEAK POWER 400W MAX TORQUE 60Nm

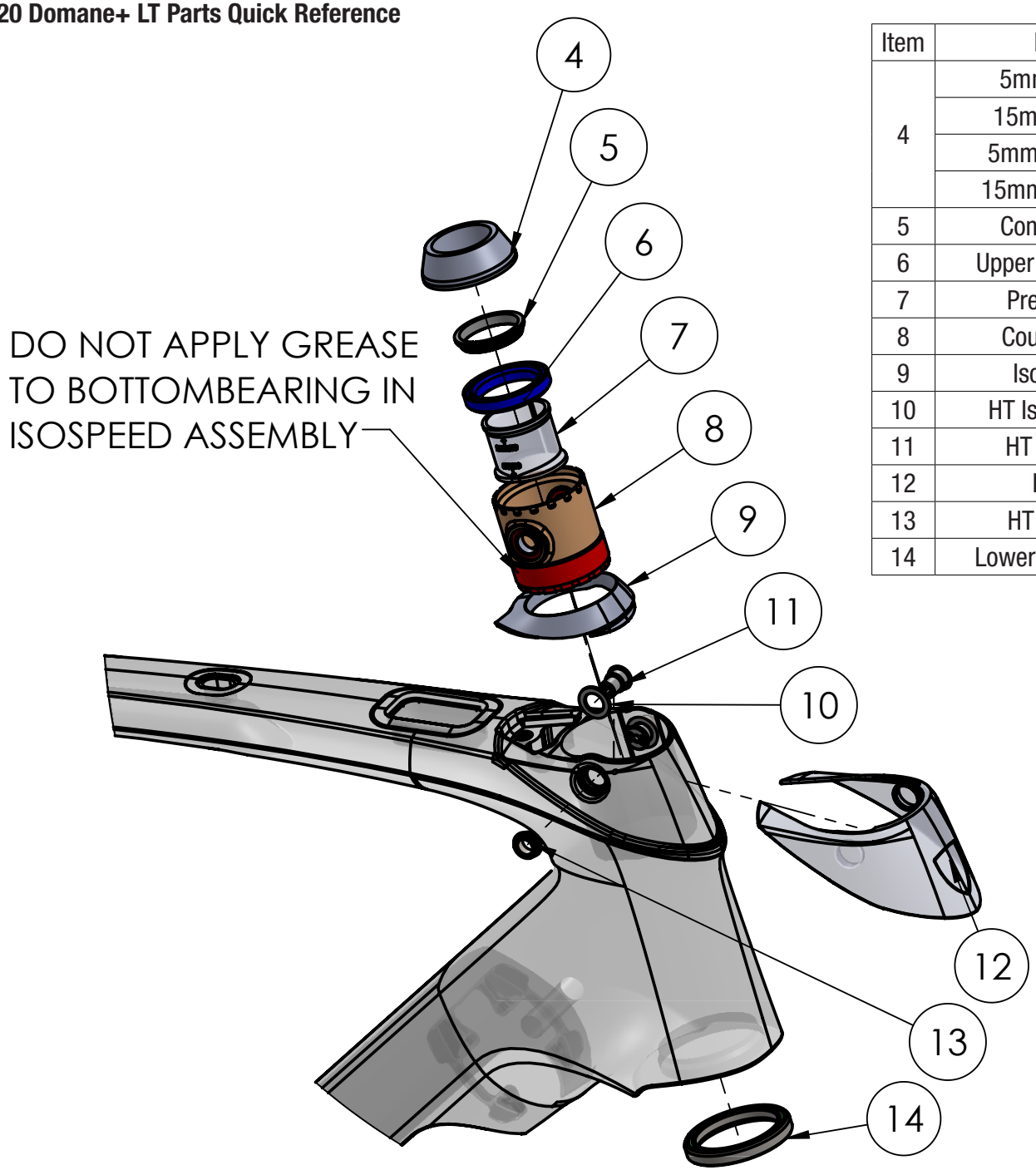

Item	Description	Part Number	Qty	Note
4	5mm Alloy Topcap	W590958	1	
	15mm Alloy Topcap	W590959	1	
	5mm Carbon Topcap	W590960	1	
	15mm Carbon Topcap	W590961	1	
5	Compression Ring	W531677	1	
6	Upper Headset Bearing	W531676	1	
7	Pre-Load Spacer	W521269	1	
8	Coupler Assembly	W546556	1	
9	IsoSpeed Cover	W583781	1	
10	HT IsoSpeed Washer	539644	2	
11	HT IsoSpeed Bolt	539644	2	
12	Brow Cover	W596786	1	Viper Red
13	HT IsoSpeed Nut	539644	2	
14	Lower Headset Bearing	W540243	1	

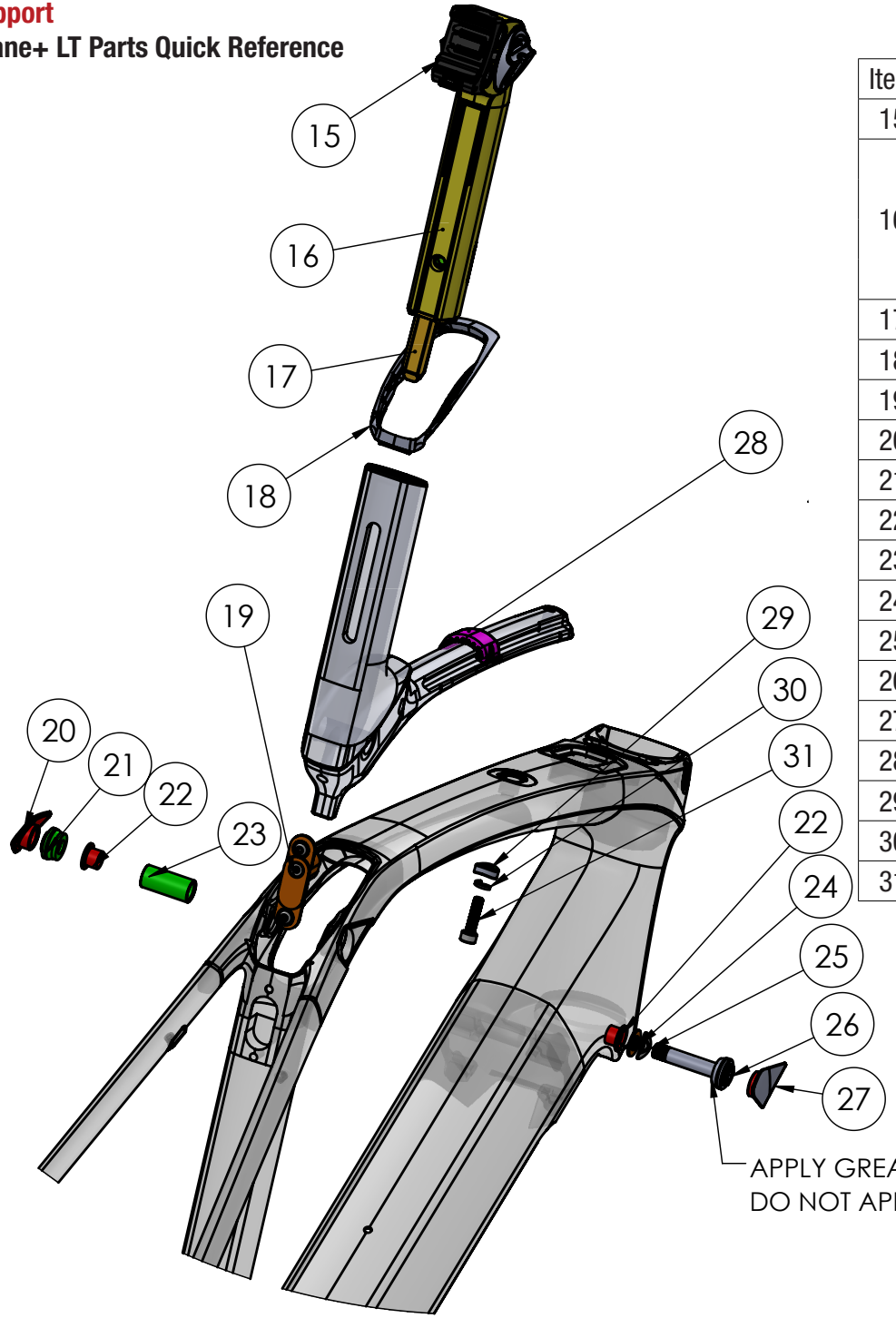

Item	Description	Part Number	Qty	Note
15	Taillight Bracket	W561410	1	
16	Seatpost, 155x5mm	W588225	1	Viper Red
	Seatpost, 155x20mm	W588226		
	Seatpost, 200x5mm	W588227		
	Seatpost, 200x20mm	W588228		
17	Seatpost “Tail”	W581152	1	
18	IsoSpeed Grommet	W583782	1	
19	IsoSpeed Damper	W564027	1	
20	External IsoSpeed Cover	W596190	1	
21	IsoSpeed Nut	599790	1	
22	Flanged Bushing	W561683	2	
23	Cylindrical Bushing	599790	1	
24	Washer, 15x8.4x0.8mm	599790	1	
25	Wave Washer	599790	1	
26	IsoSpeed Bolt	599790	1	
27	External IsoSpeed Cover	W596190	1	
28	IsoSpeed Slider	W564294	1	
29	IsoSpeed Bumper	W564444	1	
30	Lock Washer	W581552	1	
31	M5x20mm Bolt	W579510	1	

Product Support

MY20 Domane+ LT Parts Quick Reference

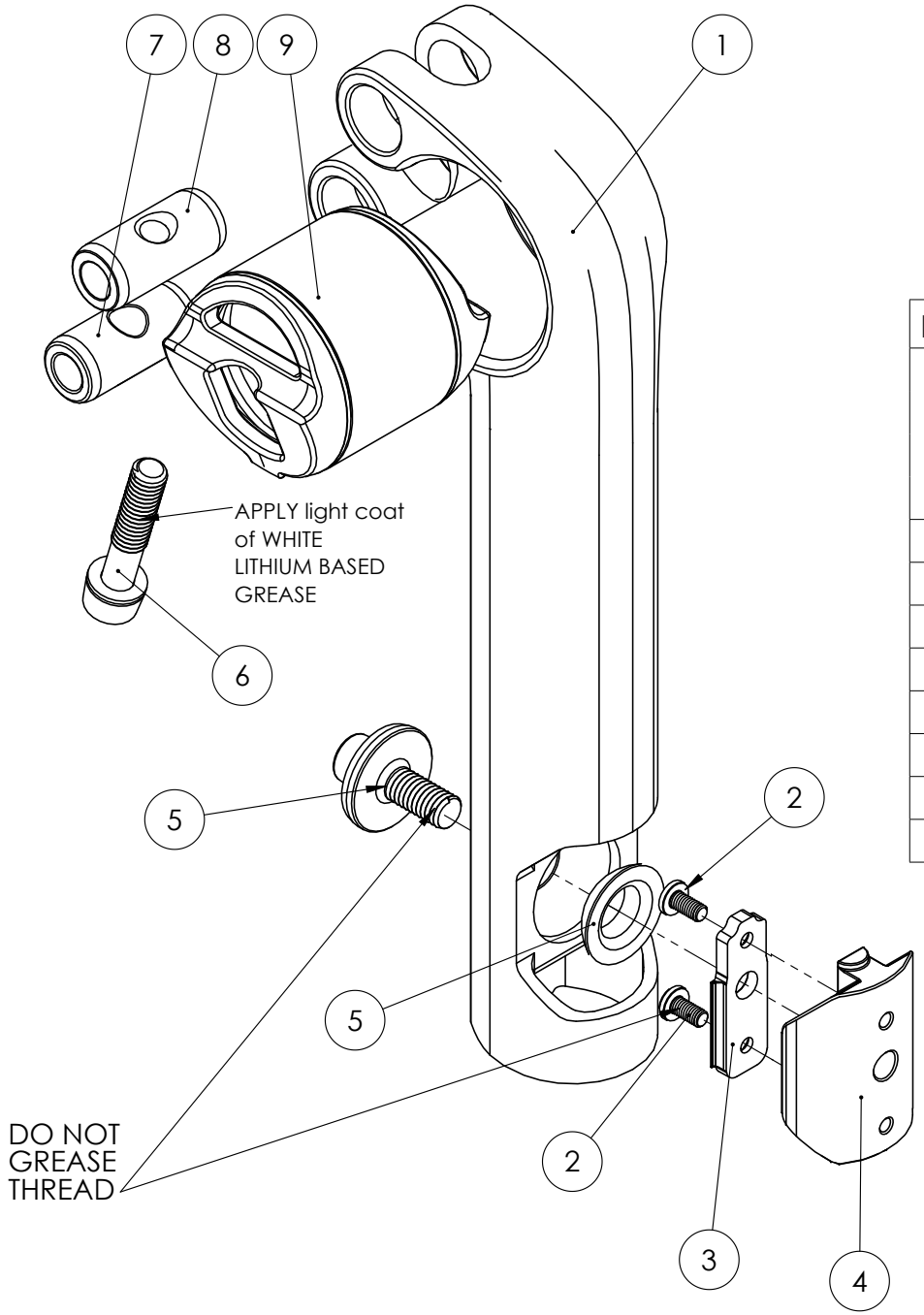

Item	Description		Part Number	Qty	Note
1	Domane+ HP Seatpost	155x5mm	W588225	1	Viper Red
		155x20mm	W588226	1	
		200x5mm	W588227	1	
		200x20mm	W588228	1	
2	M3x8mm T8 Torx Bolt		Kit 598649	2	
3	Thread Locker			1	
4	Seatpost Binder Wedge			1	
5	Wedge Bolt + Washer			1	Torque 7Nm
6	Saddle Clamp Tilt Bolt		Kit 525034	1	Torque 6-8Nm
7	Pinch Barrel, Unthreaded			1	
8	Pinch Barrel, Threaded			1	
9	Clamp Barrel			1	Torque 6-8Nm

Product Support

MY20 Domane+ LT Parts Quick Reference

Item	Description	Part Number	Qty	Note
72	M5x12mm Bolt, w/ Threadlock	W579385	4	Torque 4Nm
73	Removable Fender Bridge	W592674	1	

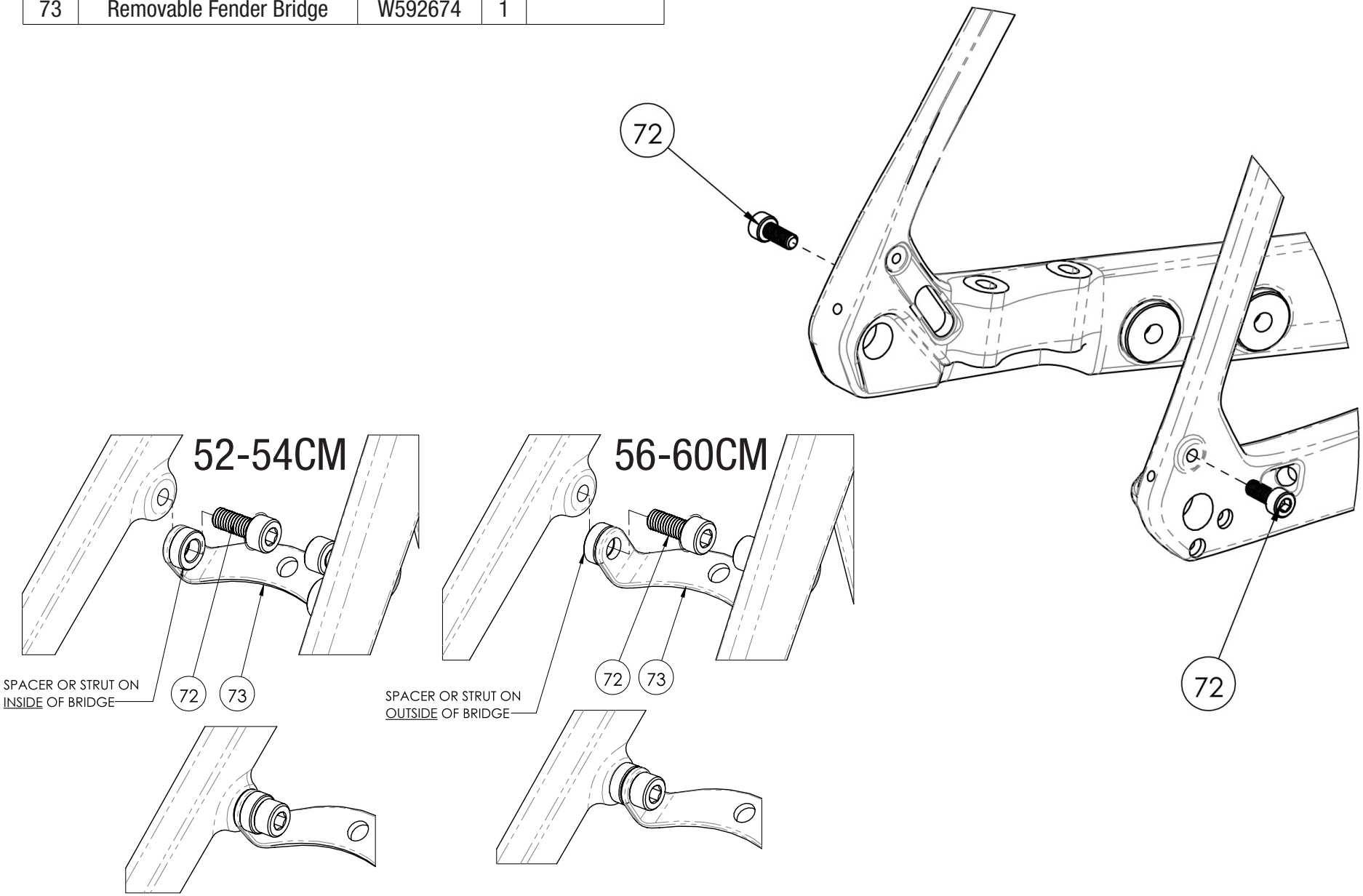

Product Support

MY20 Domane+ LT Parts Quick Reference

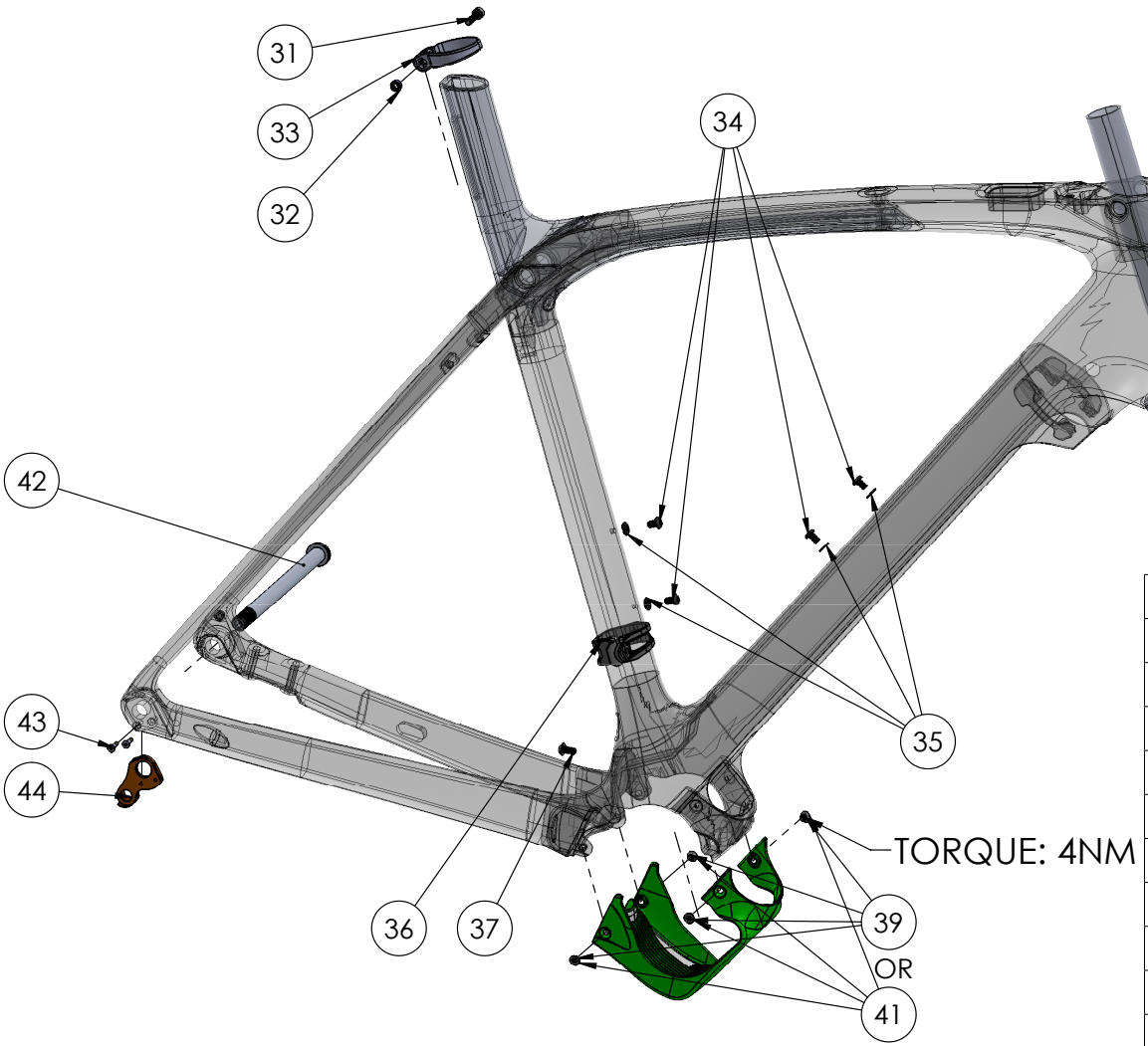

Item	Description	Part Number	Qty	Note
31	M5x20mm w/ Threadlock	W579510	2	Torque 4Nm
32	M5 Nut	590247	1	
33	Reflector Bracket	W584063	1	
34	M5x8mm Bolt	W549307	4	
35	M5 Washer	601267	4	Kit
36	FD Hanger	W584277	1	
37	M5x10mm Bolt	W549305	1	
38	M5 Plug	W308963	1	
39	M4x6mm w/ Threadlock	579247	4	T20 Socket
40	“Gearbox” Cover	W584278	1	
41	M4x6mm w/ Threadlock	579247	4	2.5mm Hex Socket
42	Thru Axle, 12x174.5mm	W565791	1	
43	M3x12mm RD Bolt	W524884	2	Torque 2.5Nm
44	Rear Derailleur Hanger	W524188	1	

Product Support

MY20 Domane+ LT Parts Quick Reference

Item	Description	Part Number	Qty	Note
46	M4X16mm Bolt	W532763	1	Torque 1Nm
47	Headtube Cable Guide	W583779	1	
50	Housing Grommet	W330578	1	
51	FD Grommet	W326042	1	
52	Cable Wrangler	W582439	1	
53	Cable Wrangler w/ 2 Mounts	600793	1	
54	Di2 Housing Grommet	W600208	1	
55	eTap Housing Grommet	W600209	1	
56	Di2 Battery Holder	W601139	1	
58	Speed Sensor	W581396	1	
59	Sensor Spacer	W590488	1	

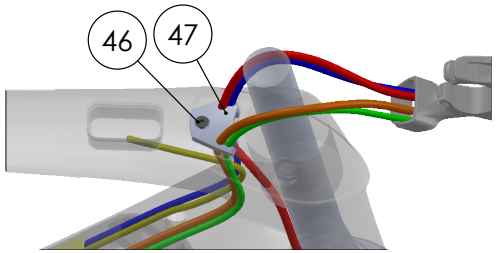

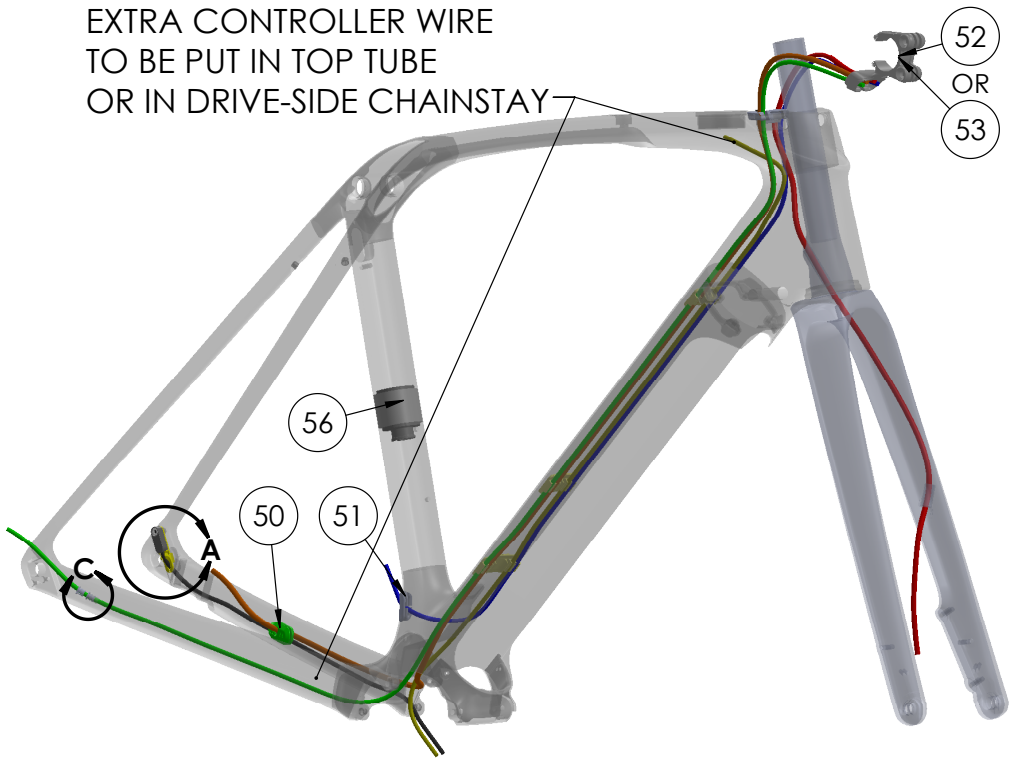

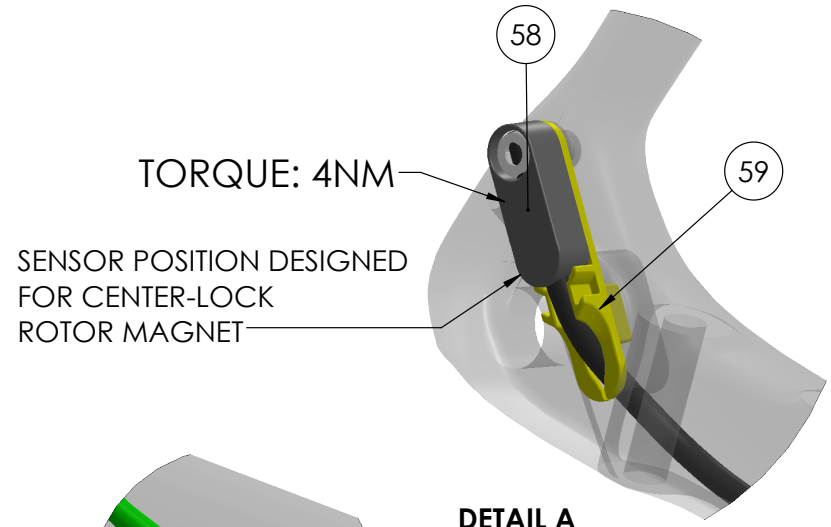

DETAIL A

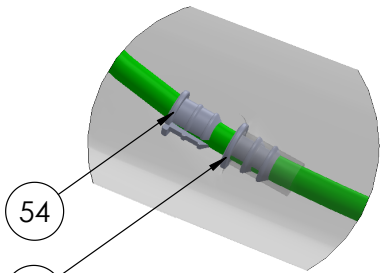

DETAIL C

Item	Description	Part Number	Qty	Note
48	Internal Housing Guide, Wide	W592629	1	1x5mm, 4x4mm, 1x3mm
49	Internal Housing Guide, Narrow	W591416	2	1x5mm, 4x4mm, 1x3mm

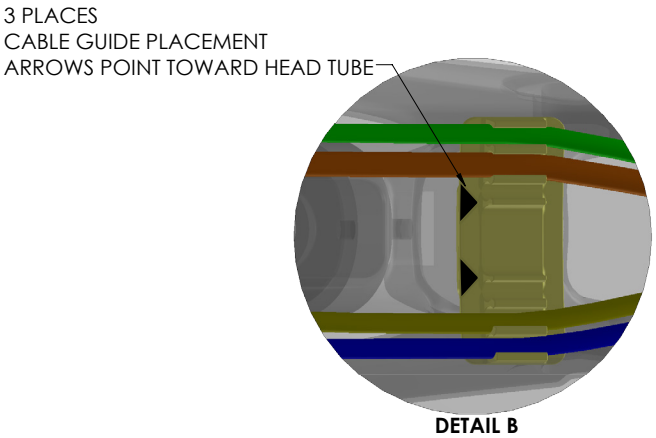

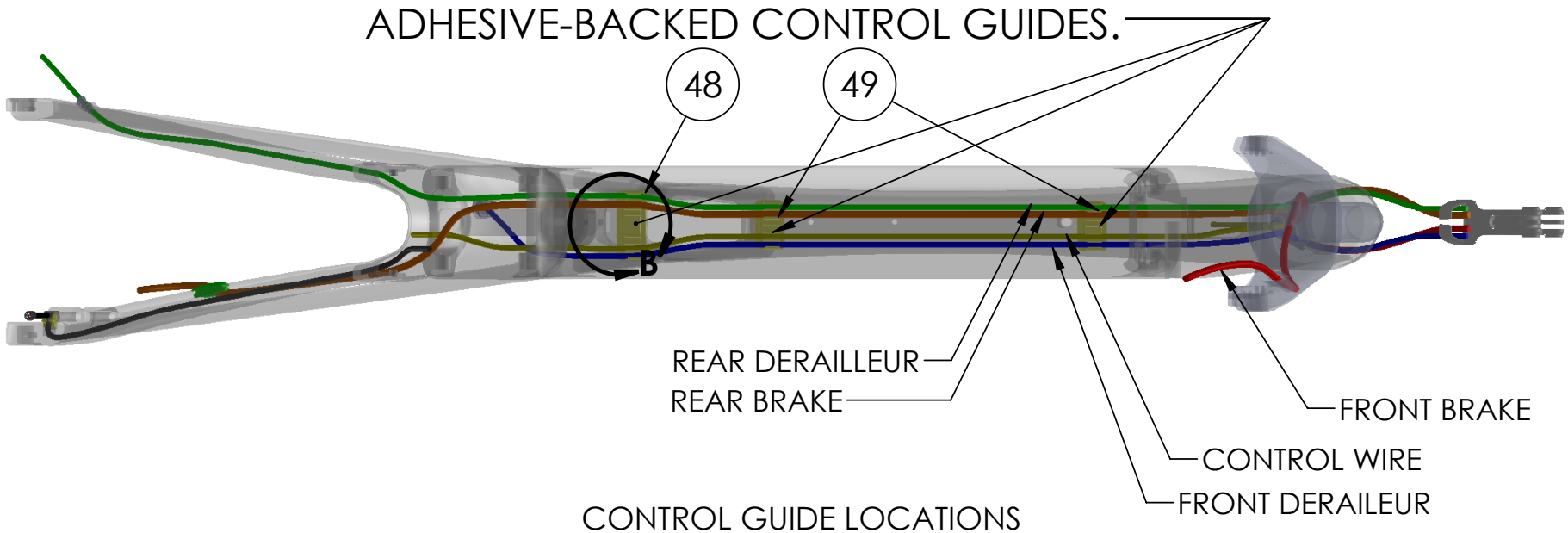

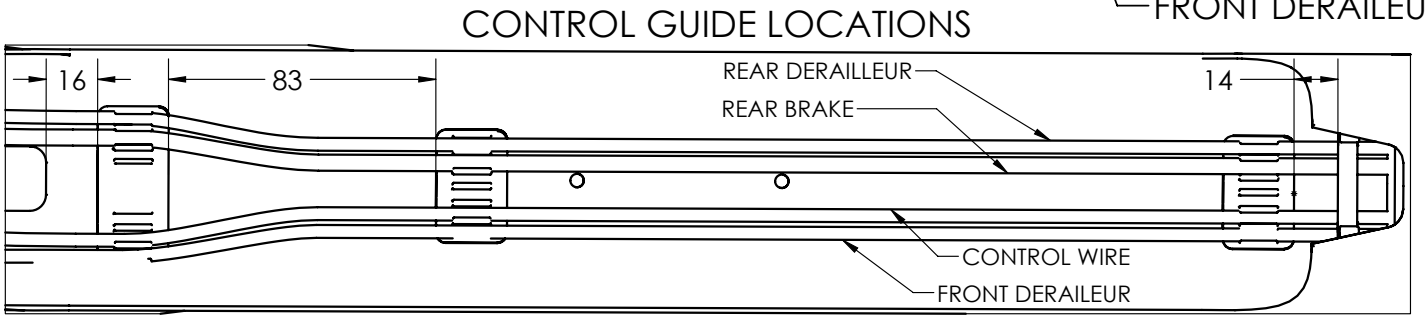

Product Support

MY20 Domane+ LT Parts Quick Reference

Item	Description	Part Number	Qty	Note
60	Seatstay Fender Mount	W595608	1	Size 50cm
61	Seatstay Fender Mount	W575637		Size 52-62cm
62	M4x8mm Bolt	W327506	2	
63	Hidden Fender Mounts	W331954	2	Kit

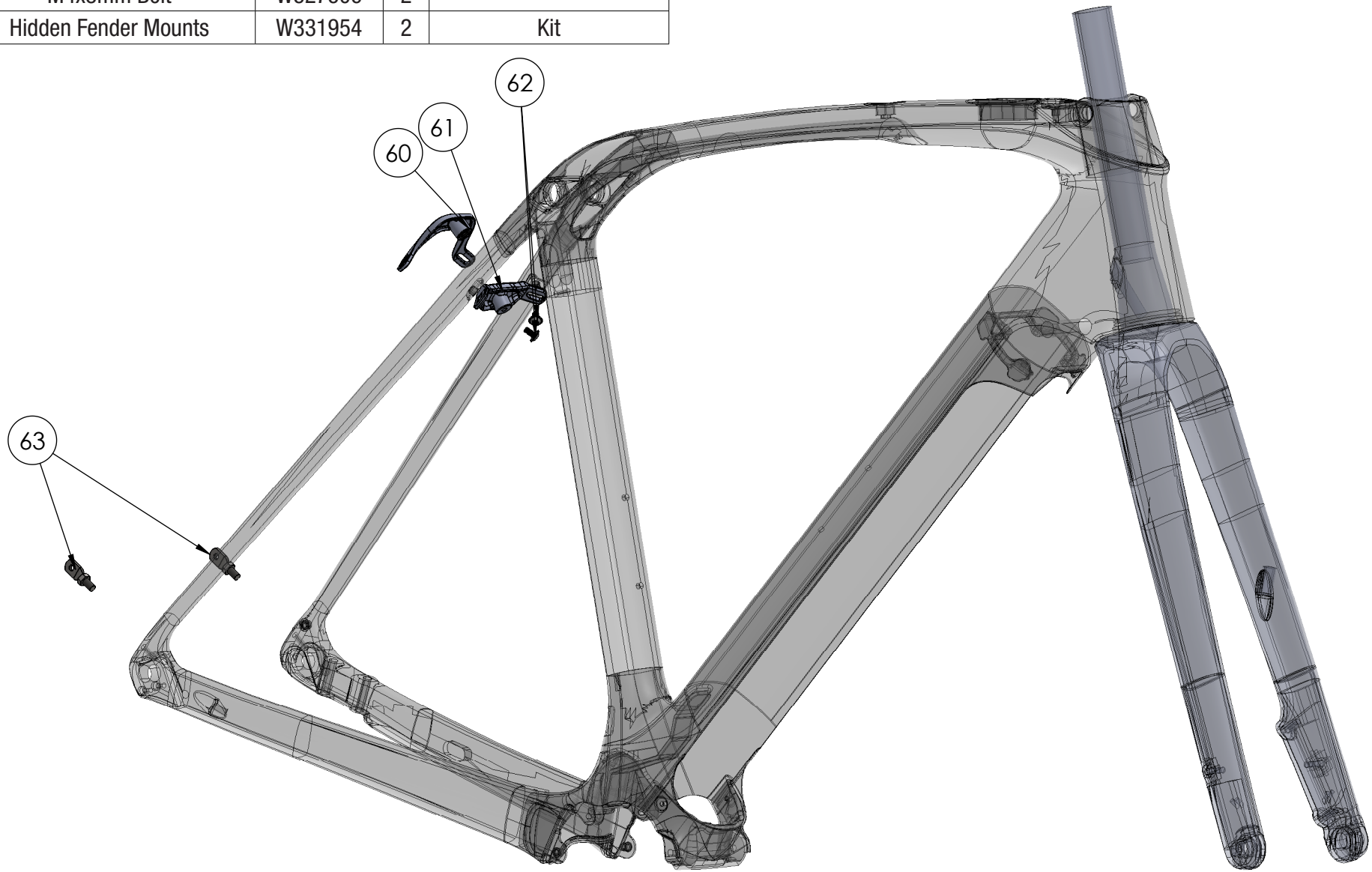

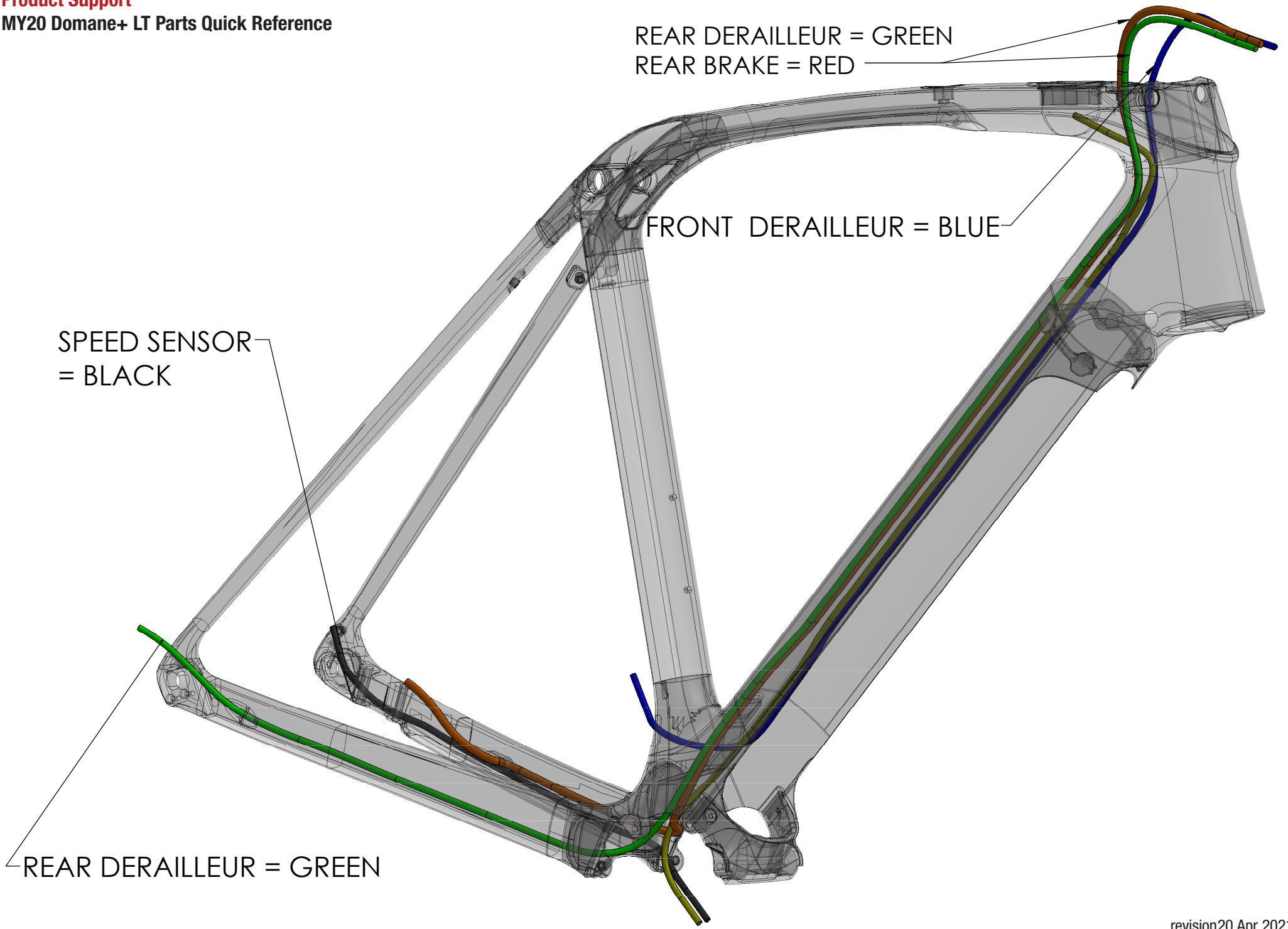
REAR DERAILLEUR = GREEN
REAR BRAKE = RED
FRONT DERAILLEUR = BLUE
SPEED SENSOR
= BLACK
REAR DERAILLEUR = GREEN

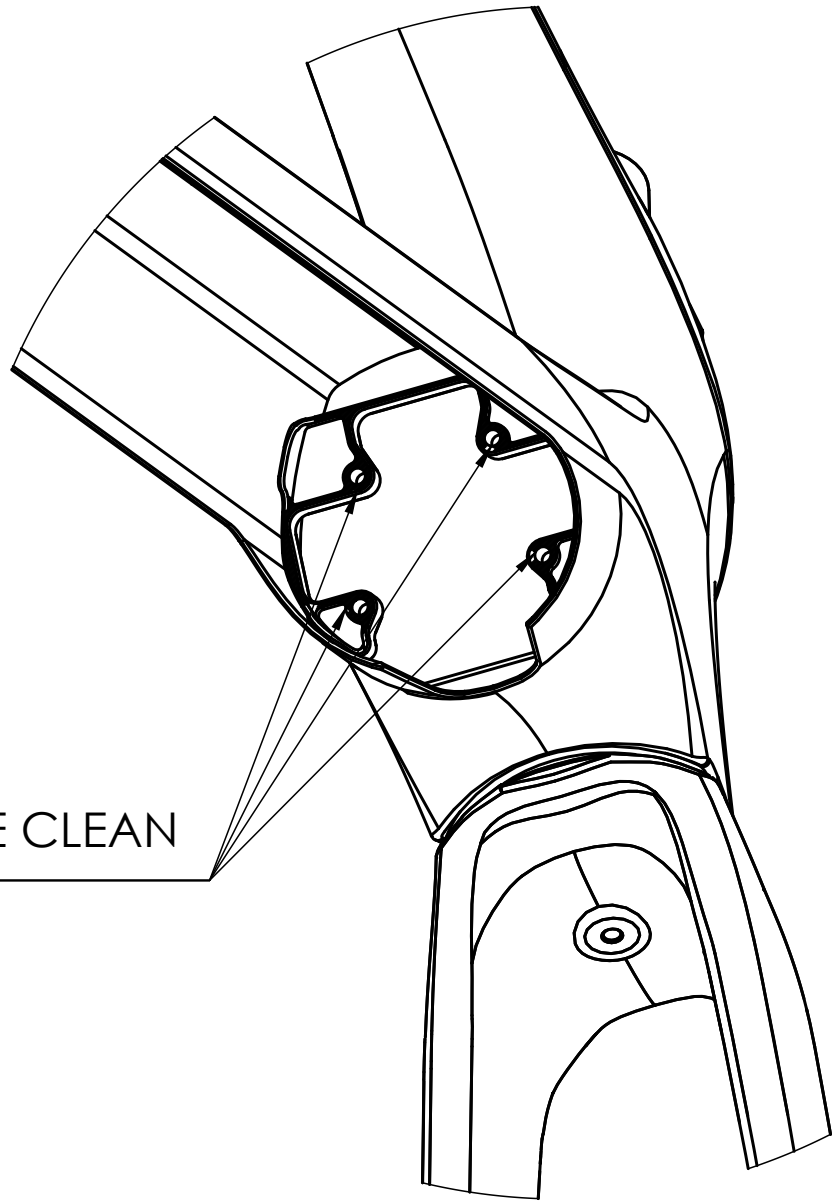

LOCKER FASTENERS
4 PLACES
TORQUE: 1.8 - 2.2N-m
FRAME THREAD MUST BE CLEAN
NO GREASE

FAZUA SPIDER LOCKRING
TORQUE: 20-25 N-m

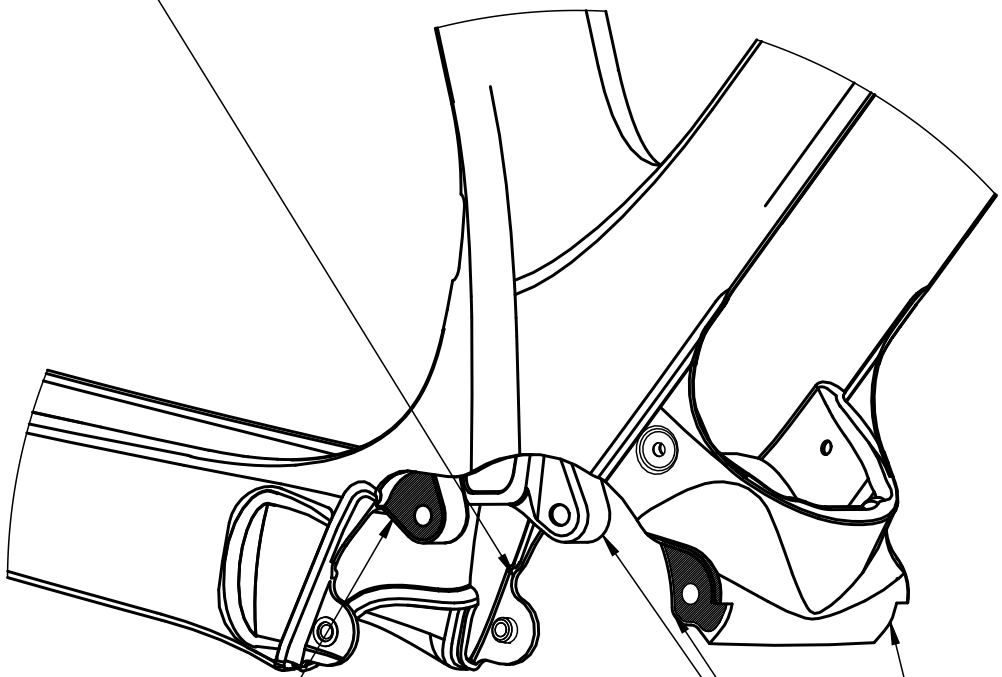

GEARBOX FASTENERS
4 PLACES
TORQUE: 8.0-8.5 N-m
FRAME THREAD MUST BE CLEAN
NO GREASE