DOMANE+ HP

ENGINEERED BY TREK BICYCLE Co. • WATERLOO, WI, USA • EST. 1976

POWER 250W PEAK POWER 600W MAX TORQUE 75Nm

Product Support

MY20 Domane+ HP Parts Quick Reference

Item	Description	Part Number	Qty	Note
8	M3x10mm Bolt	W593445	2	Torque 0.5Nm
9	Charge Port Base	W593445	1	
10	Charge Port Cover	W593445	1	
11	Ranger Extender Plug	W581454	1	
12	Range Extender Cover		1	
13	M3x8mm Screw		1	Torque 2Nm
19	Internal Housing Guide	W591416	2	
29	M5x10mm Bolt	W549305	3	Torque 3Nm
30	M5x8mm Bolt	W549307	2	Torque 4Nm
31	Range Boost Mounting Rail	W584652	1	
32	Range Boost DT Plug	W581453	1	
33	M5 Washer	W562233	3	Critical Part
54	Derailleur Hanger	W524188	1	
55	M3x12mm Bolt	W524884	2	Torque 2.5Nm
67	M5x20mm Countersunk Bolt	W579510	2	
70	Internal Housing Grommet	W330578	1	
76	Rear Reflector Bracket	W584063	1	
85	M5 Hole Plug	W308963	1	

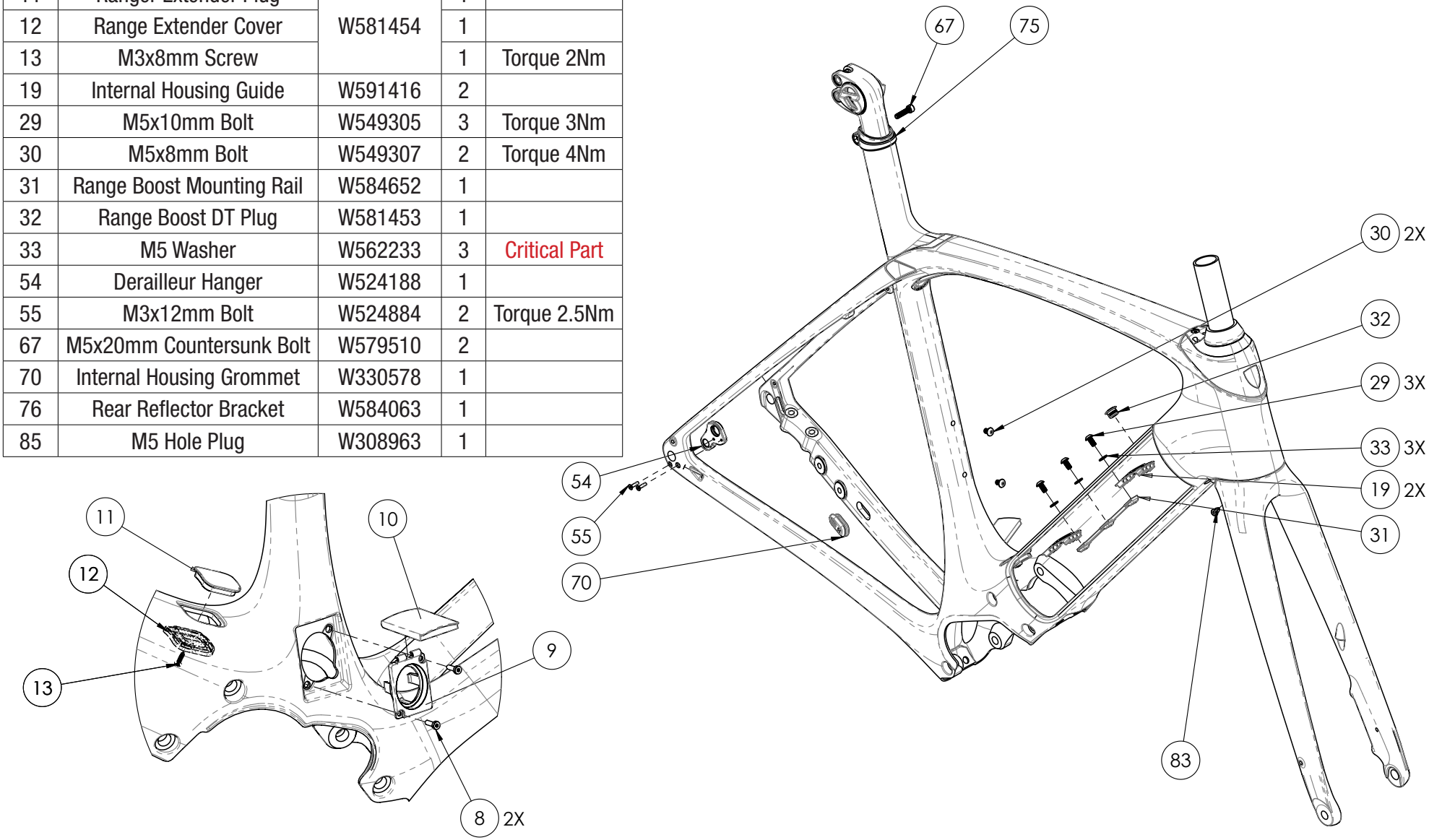

Product Support

MY20 Domane+ HP Parts Quick Reference

Item	Description	Part Number	Qty	Note
3	Headlight w/ Option High Beam Switch	W596682	1	
4	Bosch Kiox Display Mount		1	Torque 3Nm
5	Bosch Kiox Display	Bosch	1	
6	Bosch Kiox Plate	Bosch	1	
7	Bosch Kiox Remote			
18	Cable Wrangler	W592837	1	Torque 1.5Nm

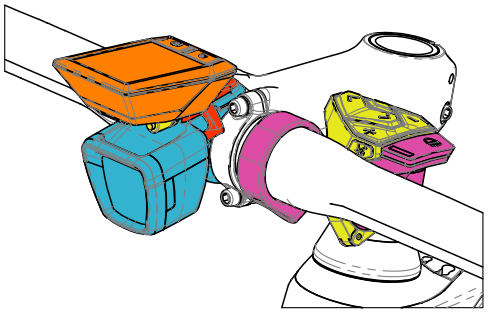

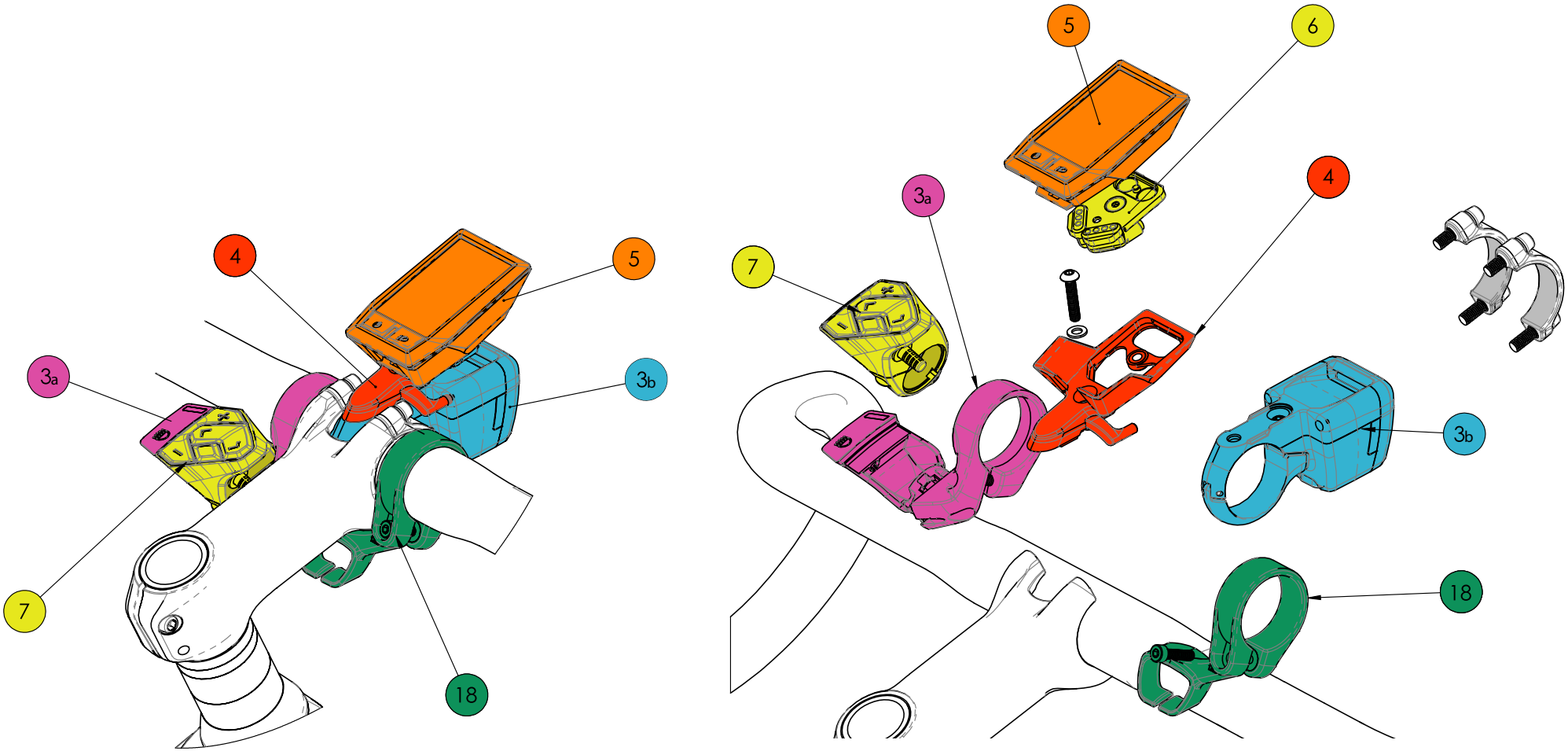

Product Support

MY20 Domane+ HP Parts Quick Reference

Item	Description	Part Number	Qty	Note
38	Headtube Cable Guide	W583779	1	
39	M4x16mm Bolt	W532763	1	Torque 1Nm
43	Lower Headset Bearing	W540243	1	
44	5mm Alloy Topcap	W590958	1	
	15mm Alloy Topcap	W590959		
	5mm Carbon Topcap	W590960		
	15mm Carbon Topcap	W590961		
45	Headtube IsoSpeed Grommet	W583781	1	
46	Headtube IsoSpeed Nut	539644	2	
47	Headtube IsoSpeed Bolt	539644	2	Torque 5.2Nm
48	Preload Spacer	W521269	1	
49	Upper Headset Bearing	W531676	1	
50	Headset Compression Ring	W531677	1	
51	Brow Cover	W595557	1	Trek Black
		W595560		Crystal White
		W595562		Purple Flip
52	Coupler Assembly	W546556	1	
53	Headtube IsoSpeed Washer	539644	2	

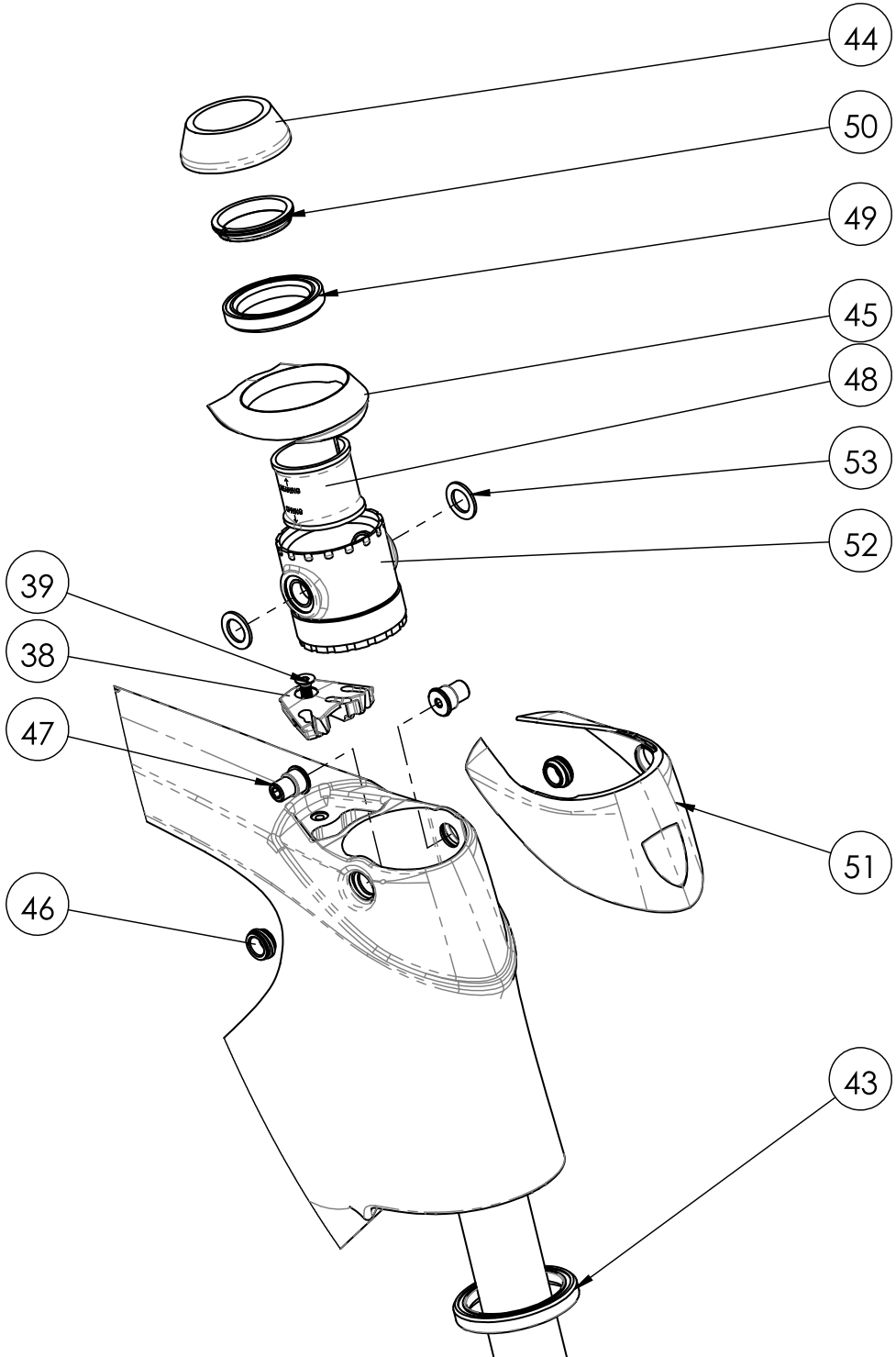

Product Support

MY20 Domane+ HP Parts Quick Reference

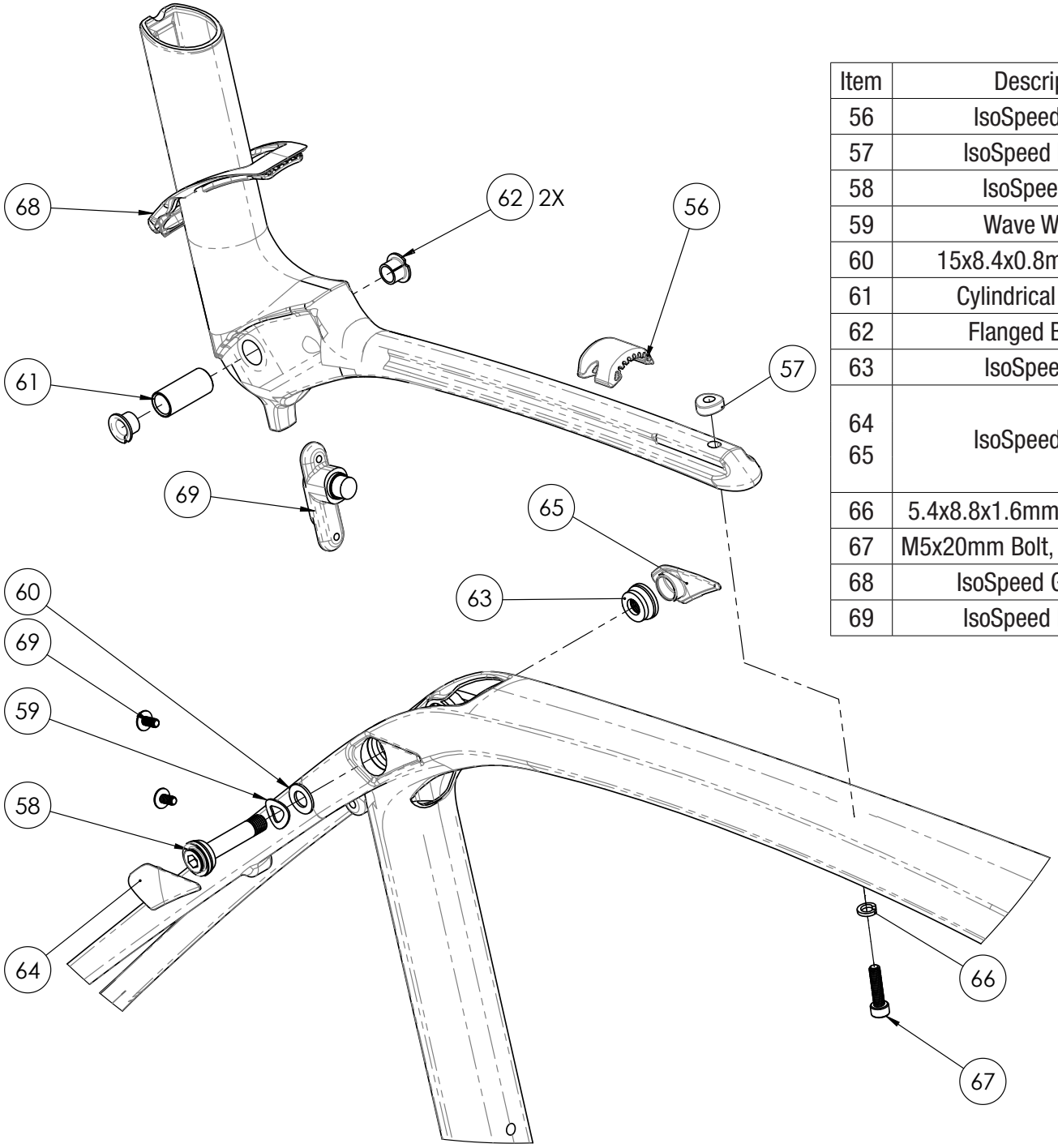

Item	Description	Part Number	Qty	Note
56	IsoSpeed Slider	W564294	1	
57	IsoSpeed Bumper	W598668	1	
58	IsoSpeed Bolt	599790	1	Torque 8Nm
59	Wave Washer		1	
60	15x8.4x0.8mm Washer		1	
61	Cylindrical Bushing		1	
62	Flanged Bushing	W561683	2	
63	IsoSpeed Nut	599790	1	
64 65	IsoSpeed Cover	W596193	1	Trek Black
		W596196		Crystal White
		W596198		Purple Flip
66	5.4x8.8x1.6mm Lock Washer	W581552	1	
67	M5x20mm Bolt, w/ Threadlock	W579510	2	
68	IsoSpeed Grommet	W583782	1	
69	IsoSpeed Damper	W564027	1	Torque 2Nm

TREK

Product Support

MY20 Domane+ HP Parts Quick Reference

Item	Description	Part Number	Qty	Note
76	RIB Assembly	See Page 7		
77	Battery Assembly	See Page 8		
78	M5x15mm T25 Security Torx	599883	4	Torque 5Nm
79	Bosch Battery Cable	Bosch	1	
80	Bosch Charging Socket	Bosch	1	
81	Bosch O-Ring	Bosch	1	

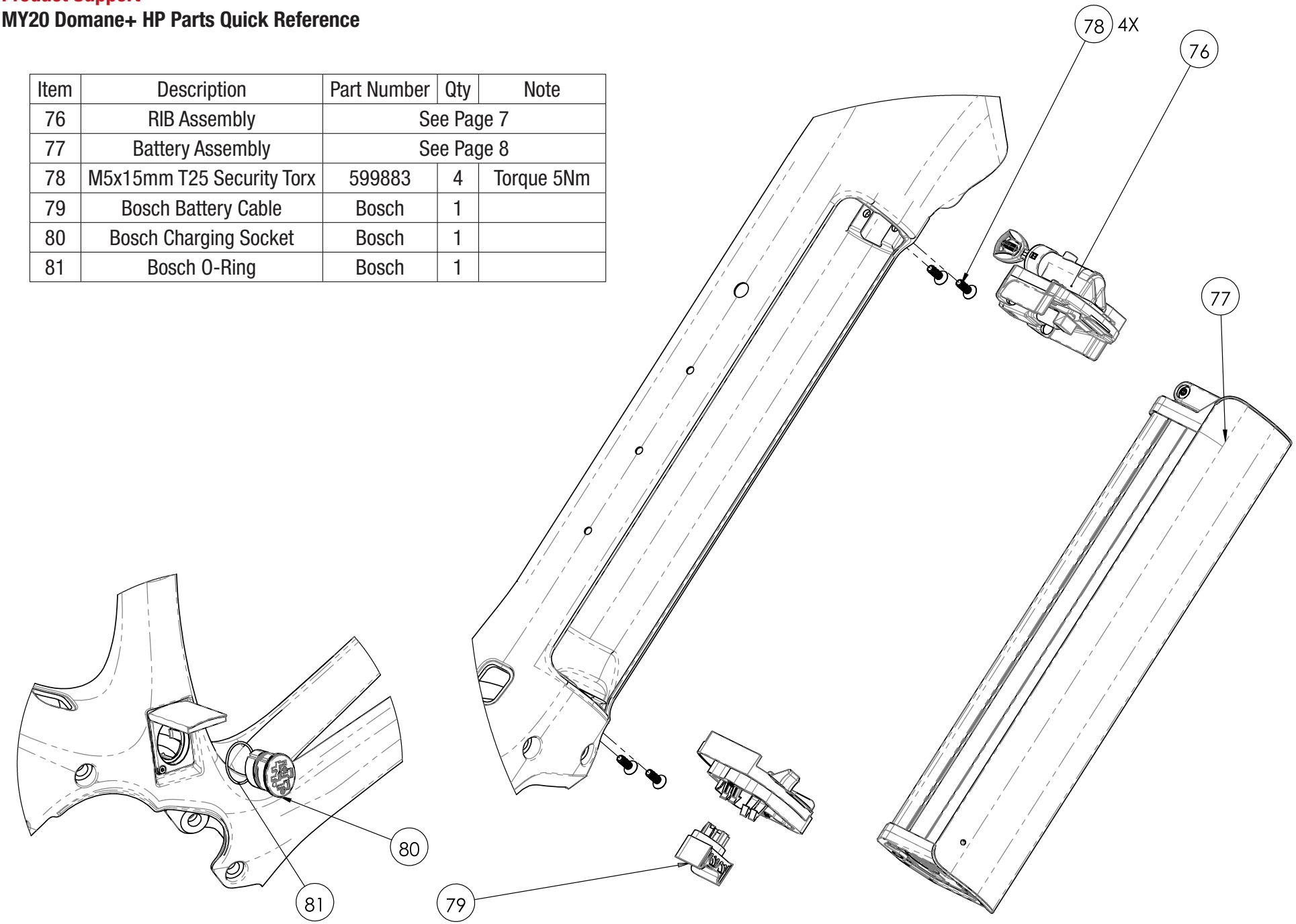

Product Support

MY20 Domane+ HP Parts Quick Reference

Item	Description	Part Number	Qty	Note
A	Upper Frame Bracket	580066	1	
B	M5 Locking Nut	599883	4	
C	ABUS Lock Core	W562311	1	
D	15x5.3x2mm Washer	579247	2	
E	M5x16mm Bolt	579247	4	Torque 5Nm
F	Battery Bumper	584097	2	
G	Upper Docking Bracket	584097	1	
H	Ejector Assembly	579324	1	Torque 5Nm
I	M4x8mm Bolt	579247	2	Torque 1.2Nm
J	Lower Docking Bracket	584097	1	
K	Lower Frame Bracket	580066	1	

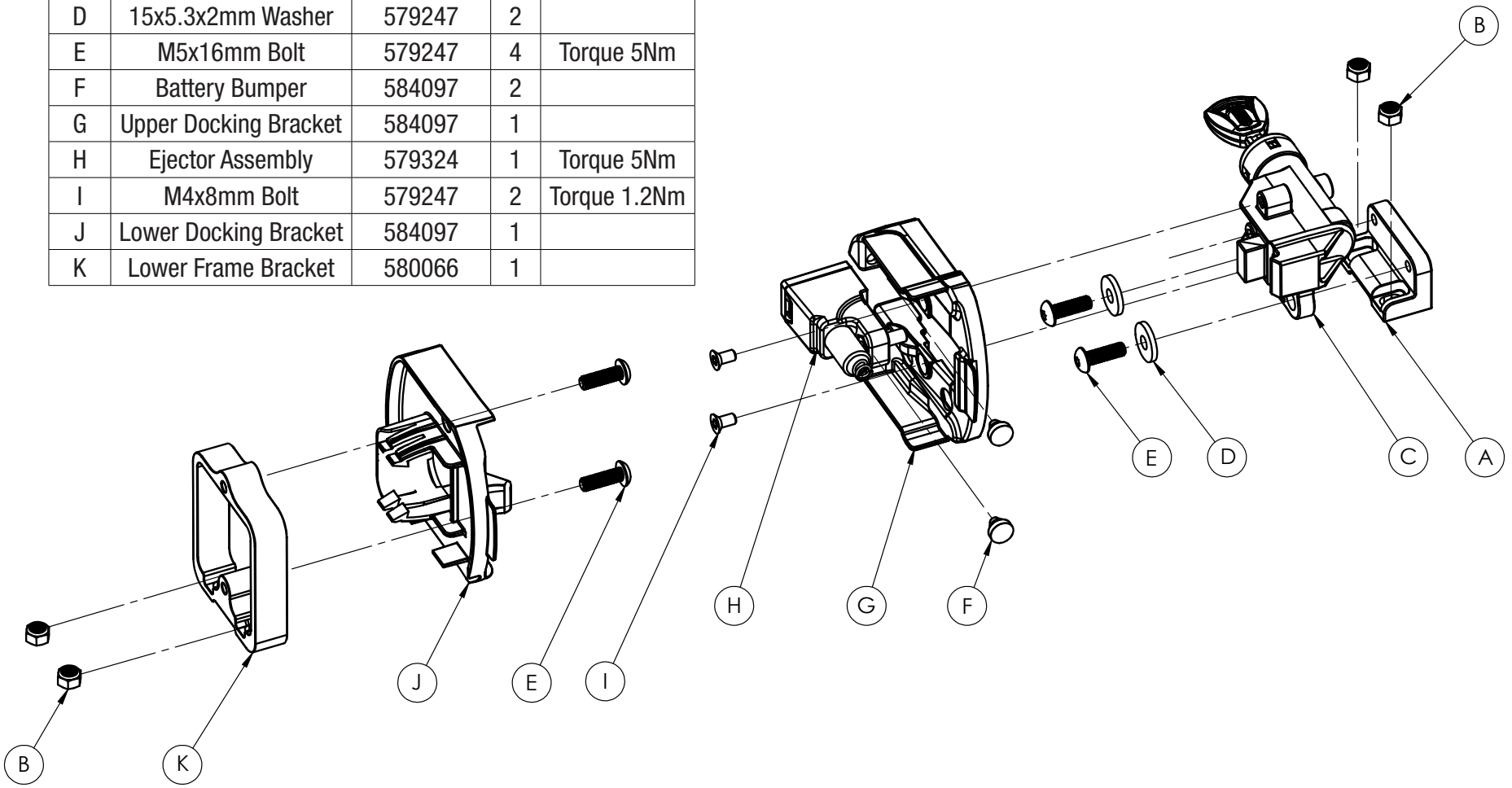

Product Support

MY20 Domane+ HP Parts Quick Reference

Item	Description	Part Number	Note
A	RIB Battery Cover	1045002	Matte Charcoal
		1045003	Radioactive Red
		1045004	Purple Flip

Item	Description	Part Number	Qty	Note
B	Handle Assembly	572657	1	
C	Spring Cap	572657	1	
D	Battery Handle Spring	572657	1	
E	M4x8mm Bolt	579092	6	Torque 2.4Nm
F	Lower Battery Cover	W555588	1	
G	M3x20mm Bolt	579092	4	

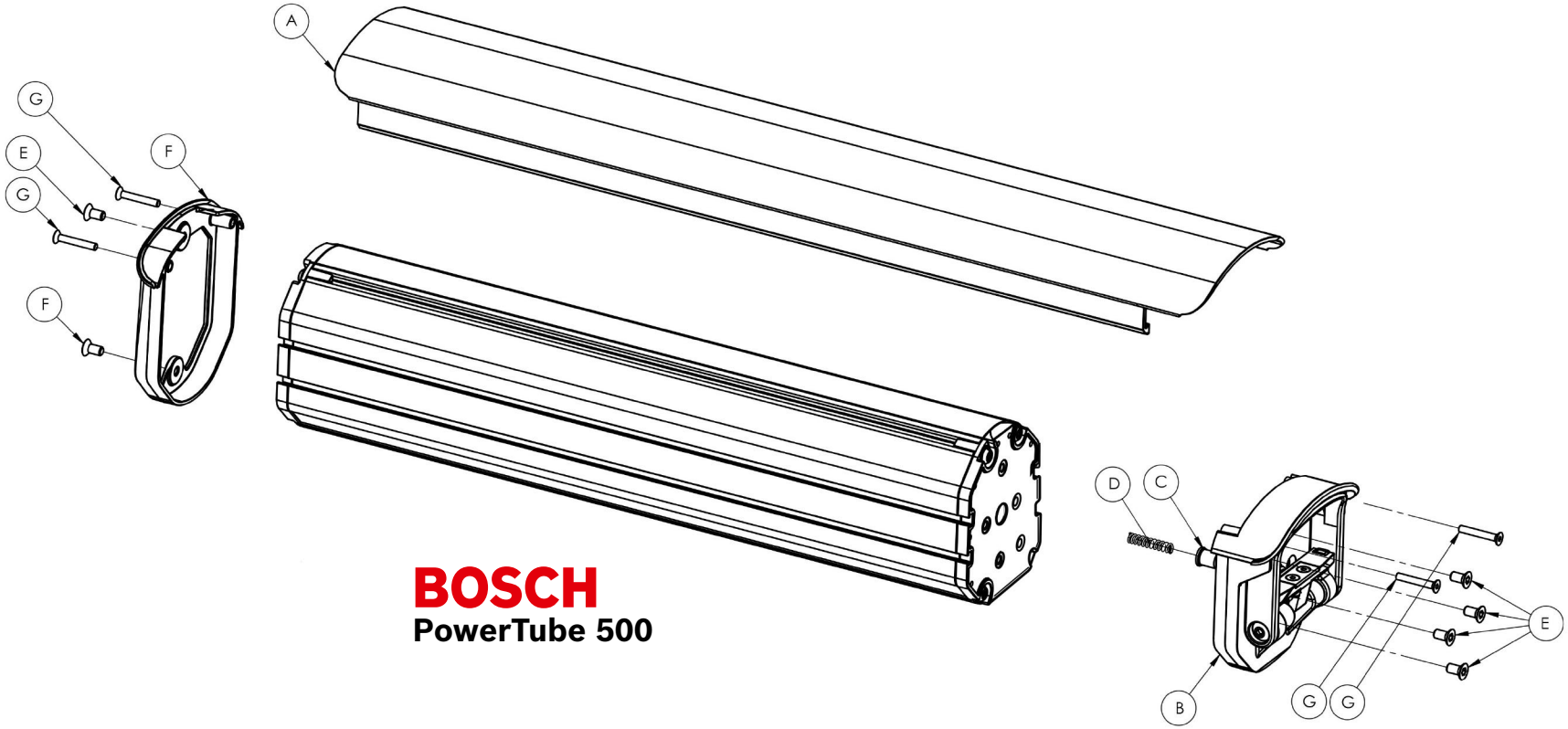

Product Support

MY20 Domane+ HP Parts Quick Reference

Item	Description	Part Number	Qty	Note
20	M8 Bosch Mounting Bolts, Torx Plus TX40	Bosch	6	Torque 20Nm
21	Bosch Drive Unit	Bosch	1	
22	Bosch Logo Bezel	Bosch	1	
23	Chainring	Praxis	1	
24	Bosch Lockring	Bosch	1	Torque 25-30Nm
25	Bosch O-Ring	Bosch	1	
26	Crankarm	Praxis	2	
34	Motor Armor	1042712	1	Matte Charcoal
		1042713		Radioactive Red
		1042714		Purple Flip
		1042715		Era White
35	Sheet Metal Nut	594765	2	
36	M4.8x16mm Tapping Screw T25	594765	2	Torque 3Nm
37	M4x12mm Bolt	W561409	2	Torque 3Nm

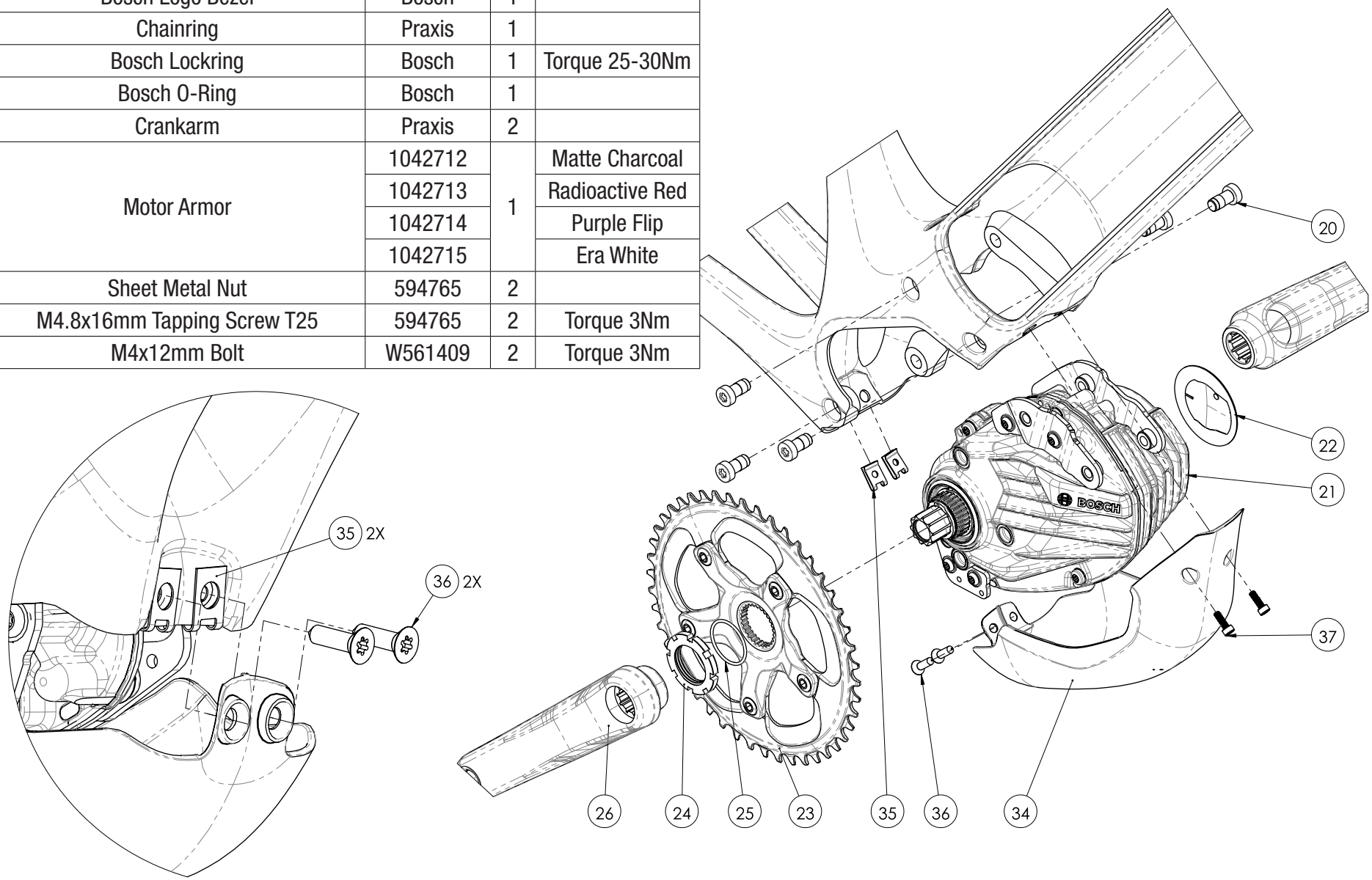

Item	Description	Part Number	Qty	Note
17	Taillight	W596865	1	
	Seatpost	See Next Page		
28	Seatpost “Tail”	W581152		

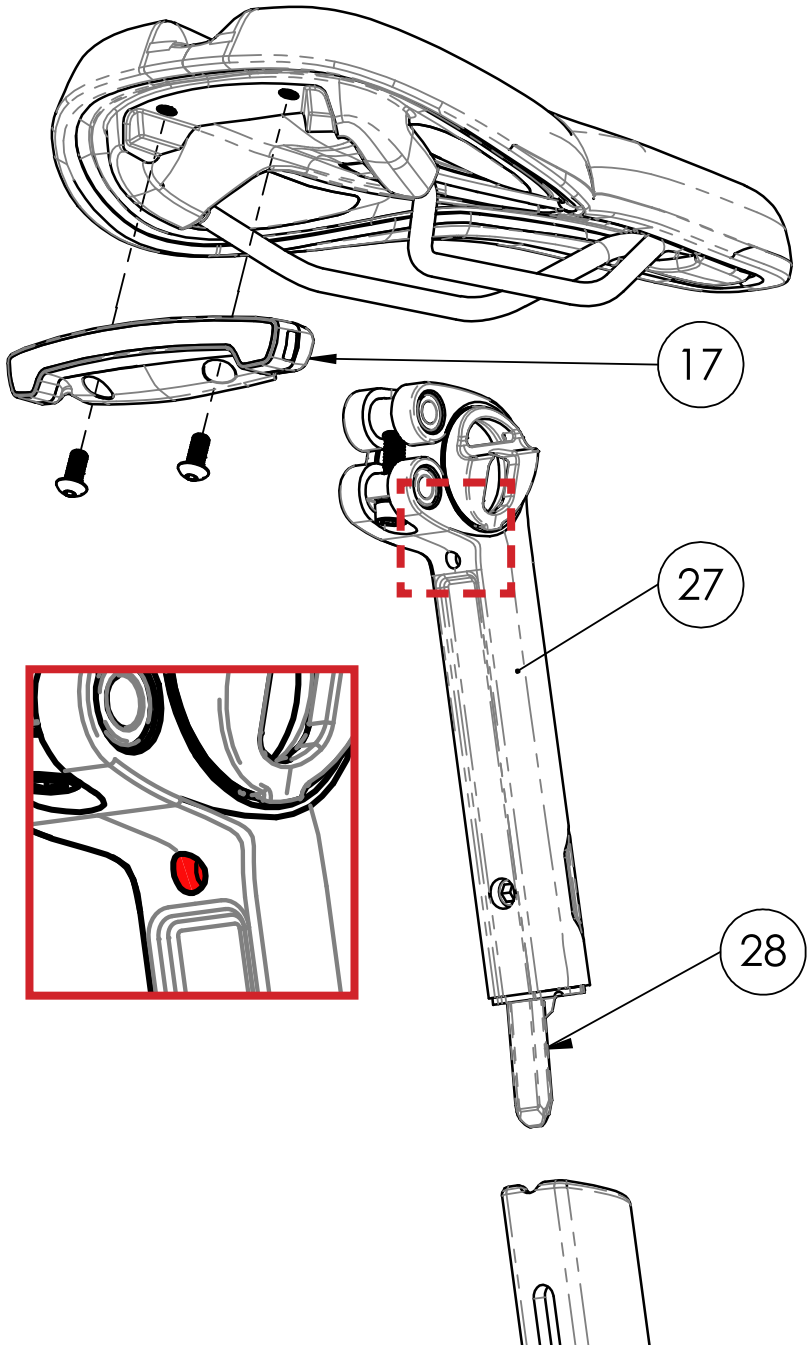

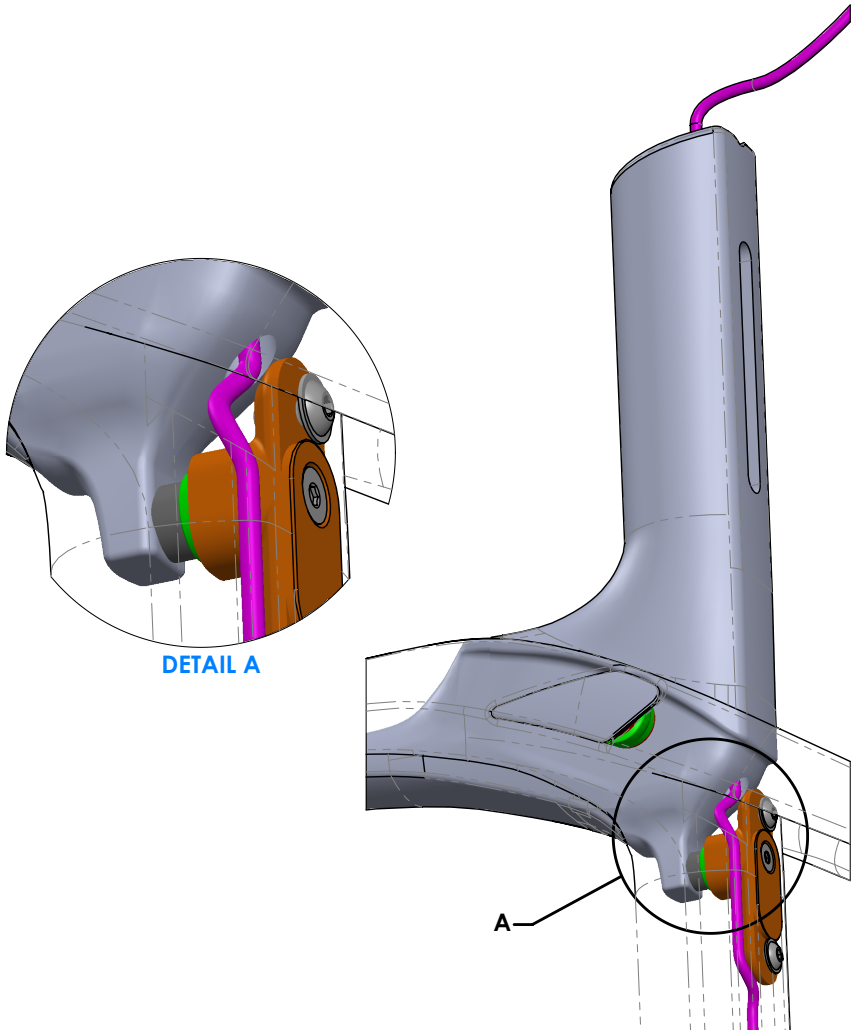

Product Support

MY20 Domane+ HP Parts Quick Reference

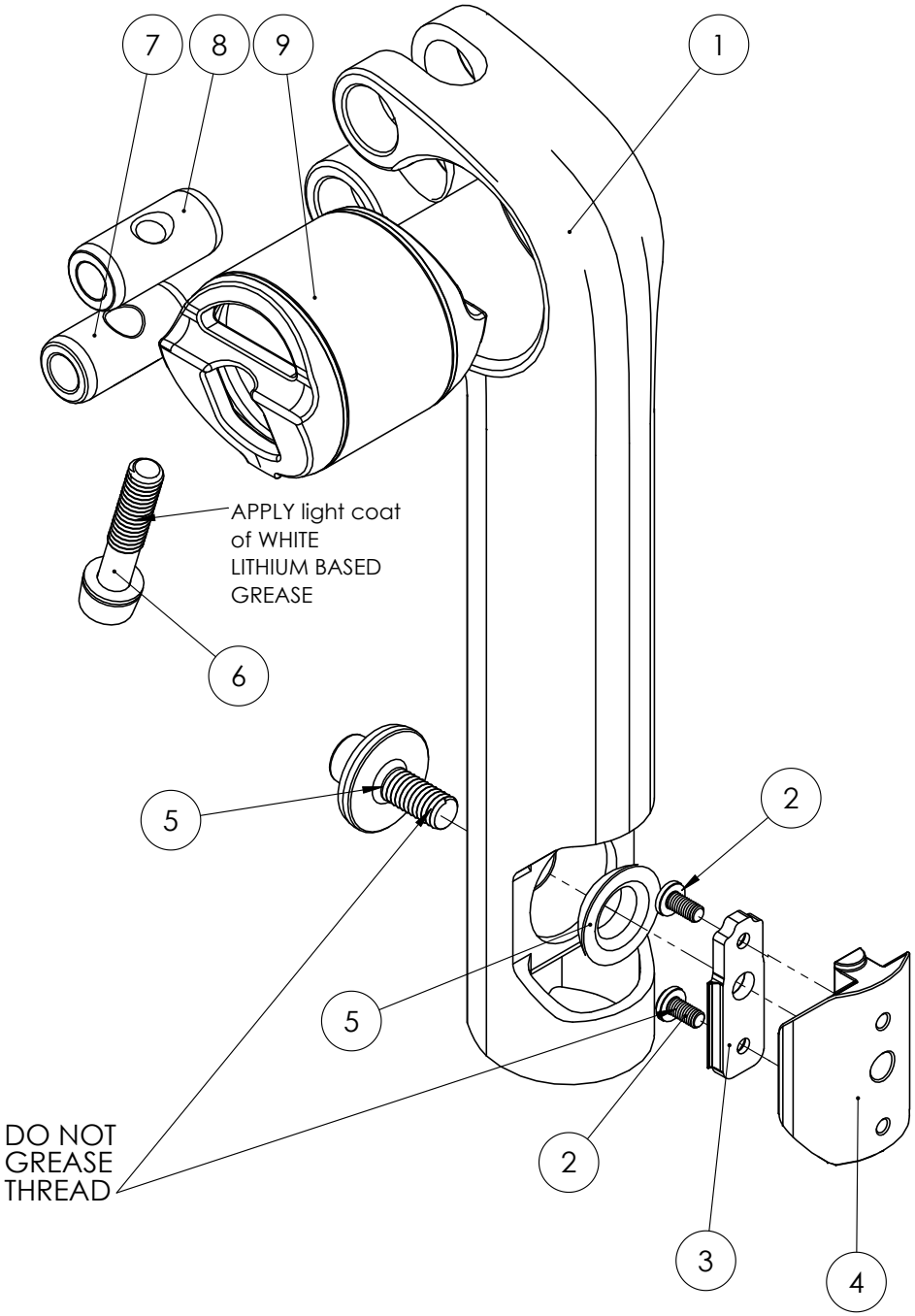

Item	Description		Part Number	Qty	Note
1	Domane+ HP Seatpost	Gloss Trek Black	W599718	1	155x5mm
			W599720	1	155x20mm
			W599719	1	200x5mm
			W599721	1	200x20mm
		Matte Trek Black	W599441	1	155x5mm
			W599443	1	155x20mm
			W599442	1	200x5mm
			W599444	1	200x20mm
2	M3x8mm T8 Torx Bolt		Kit 598649	2	
3	Thread Locker			1	
4	Seatpost Binder Wedge			1	
5	Wedge Bolt + Washer			1	Torque 7Nm
6	Saddle Clamp Tilt Bolt		Kit 525034	1	Torque 6-8Nm
7	Pinch Barrel, Unthreaded			1	
8	Pinch Barrel, Threaded			1	
9	Clamp Barrel			1	Torque 6-8Nm

Product Support

MY20 Domane+ HP Parts Quick Reference

Item	Description	Part Number	Qty	Note
14	Integrated Speed Sensor	W582244	1	
15	Sensor Spacer	W590488	1	
16	M4x8mm Bolt	W562831	1	Torque 2Nm
40	Pletscher Comp 40 Kickstand	W572620	1	
41	M6x25mm Bolt, w/ Threadlock	W592130	2	Torque 7Nm
42	10x6.4x0.7mm Washer	W575343	2	Critical Part

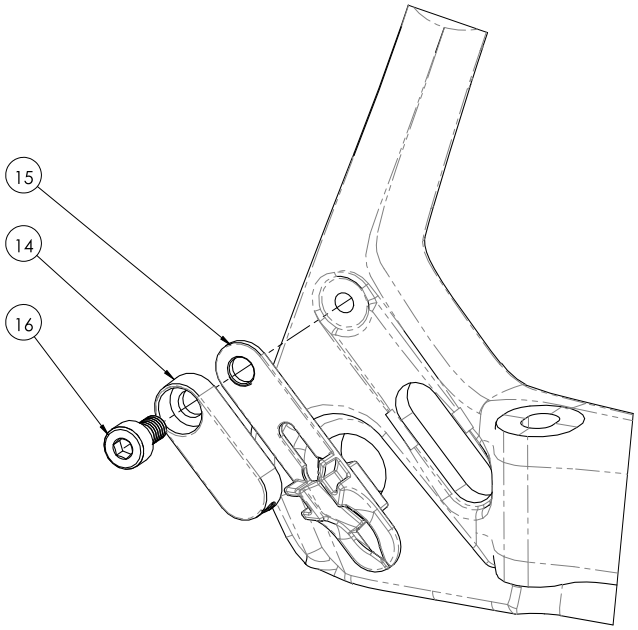

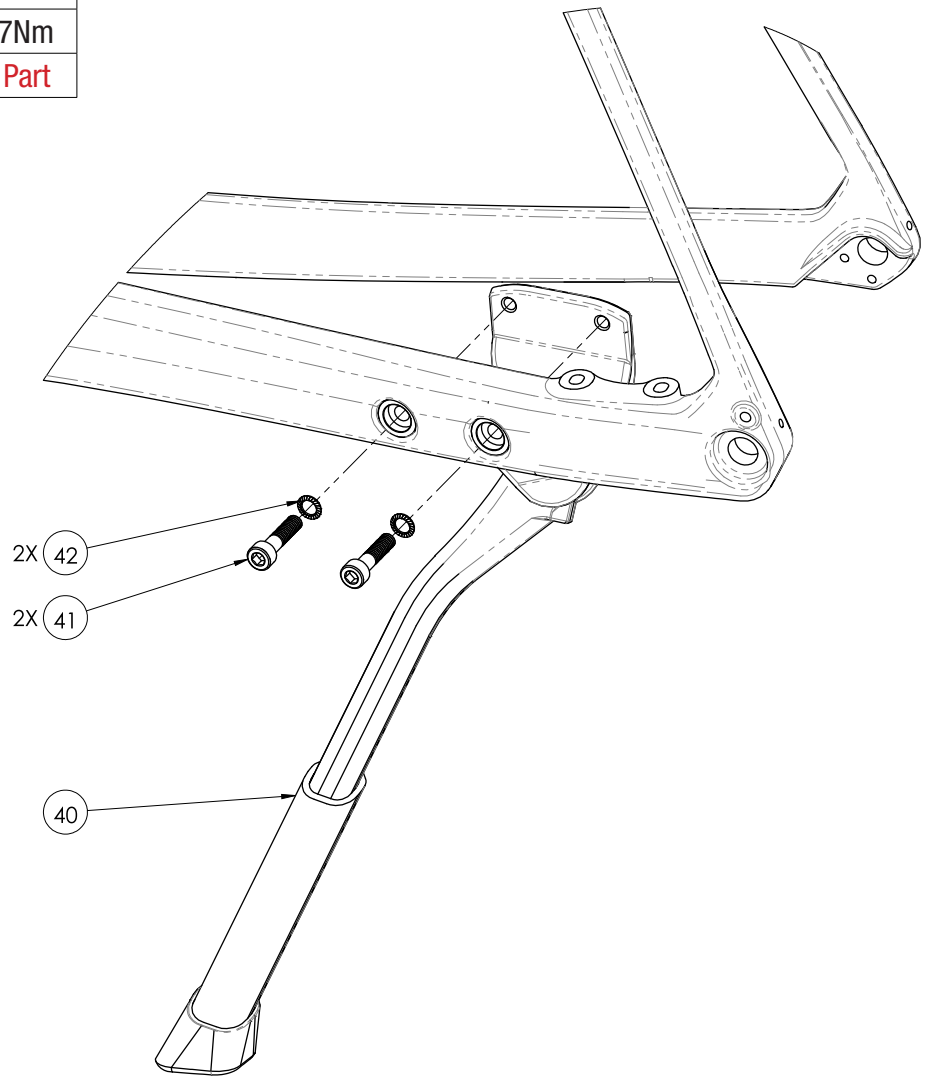

Product Support

MY20 Domane+ HP Parts Quick Reference

Item	Description	Part Number	Qty	Note
72	M5x12mm Bolt, w/ Threadlock	W438323	4	Torque 4Nm
73	Removable Fender Bridge	W592674	1	
74	Vanishing Fender Mounts	W331954	1	

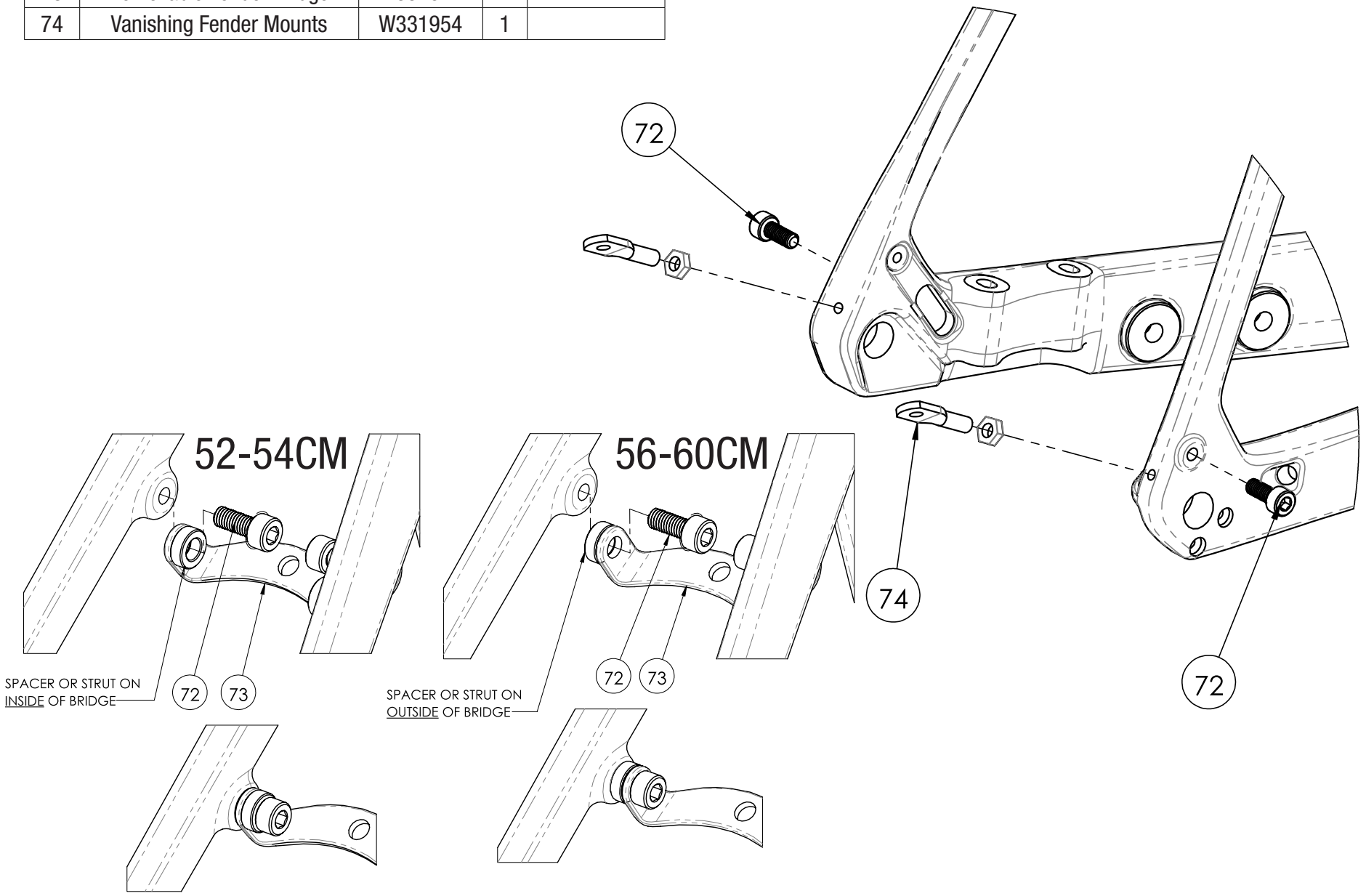

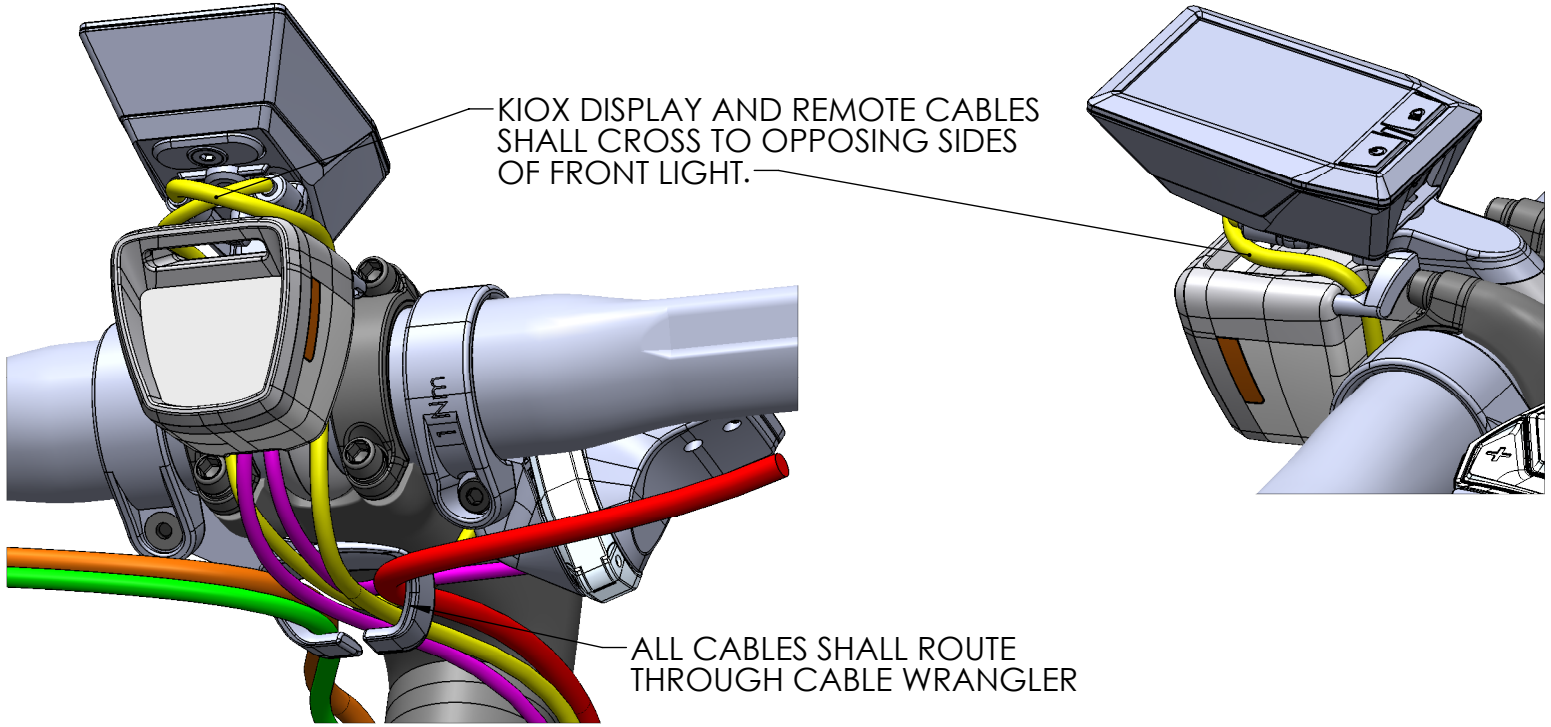
KIOX DISPLAY AND REMOTE CABLES
SHALL CROSS TO OPPOSING SIDES
OF FRONT LIGHT.
ALL CABLES SHALL ROUTE
THROUGH CABLE WRANGLER

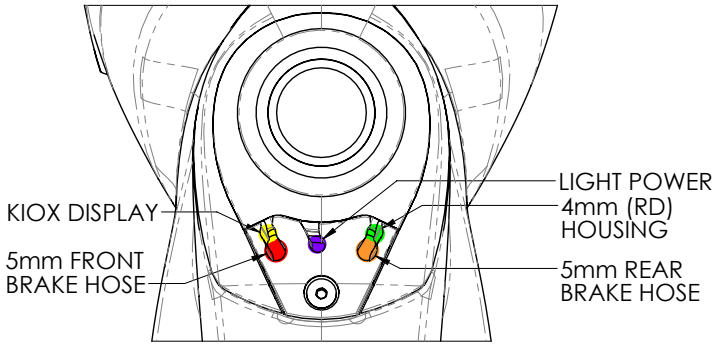
KIOX DISPLAY
5mm FRONT
BRAKE HOSE
LIGHT POWER
4mm (RD)
HOUSING
5mm REAR
BRAKE HOSE

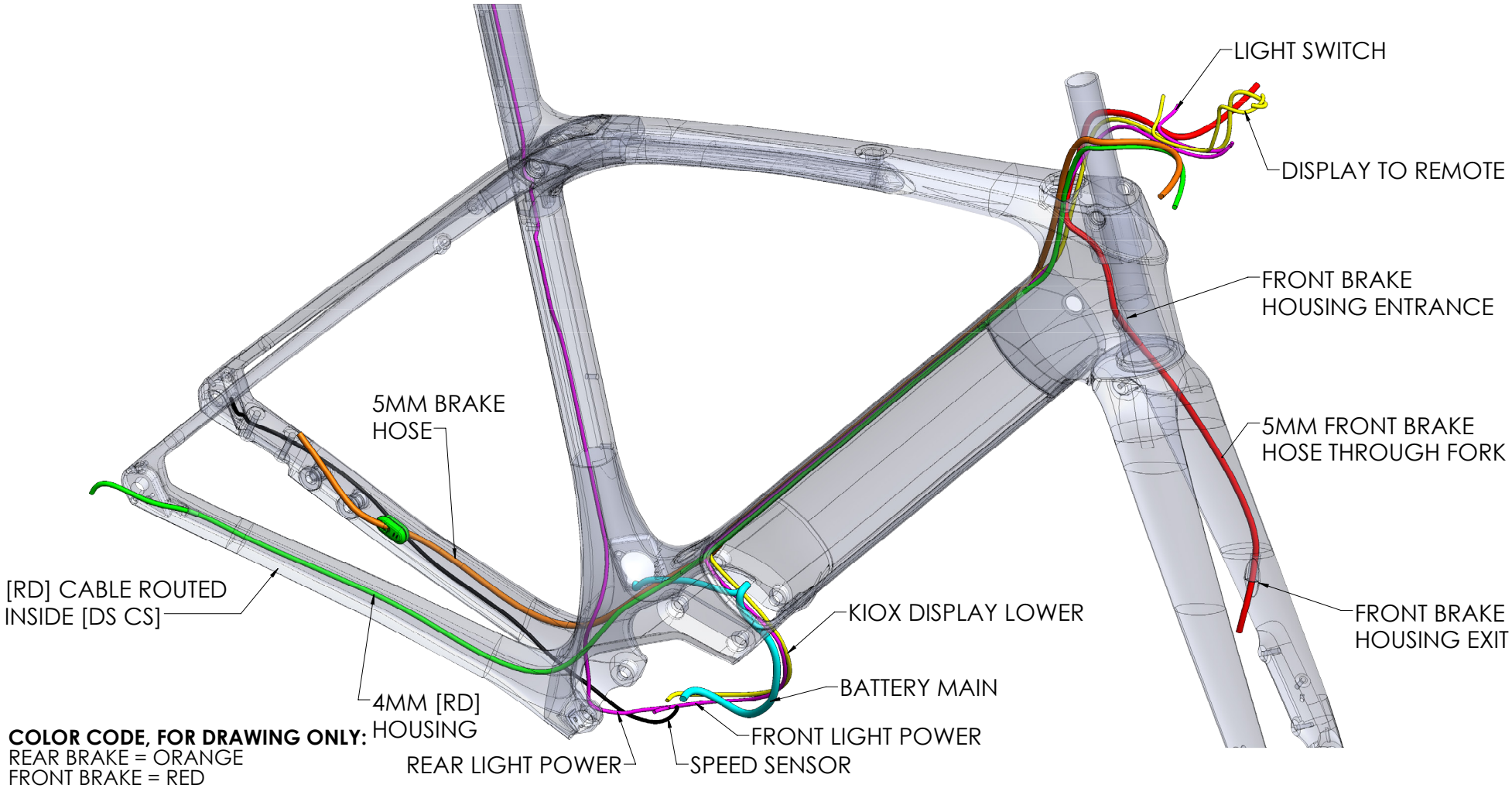

COLOR CODE, FOR DRAWING ONLY:
REAR BRAKE = ORANGE
FRONT BRAKE = RED
REAR DERAILLEUR = GREEN
BATTERY MAIN = BLUE
LIGHTS POWER = PURPLE
KIOX DISPLAY = YELLOW
SPEED SENSOR = BLACK

Item	Description	Part Number	Qty	Note
84	Di2 Battery Holder	W601139	1	
85	Di2 RD Cable Grommet	W600208	1	

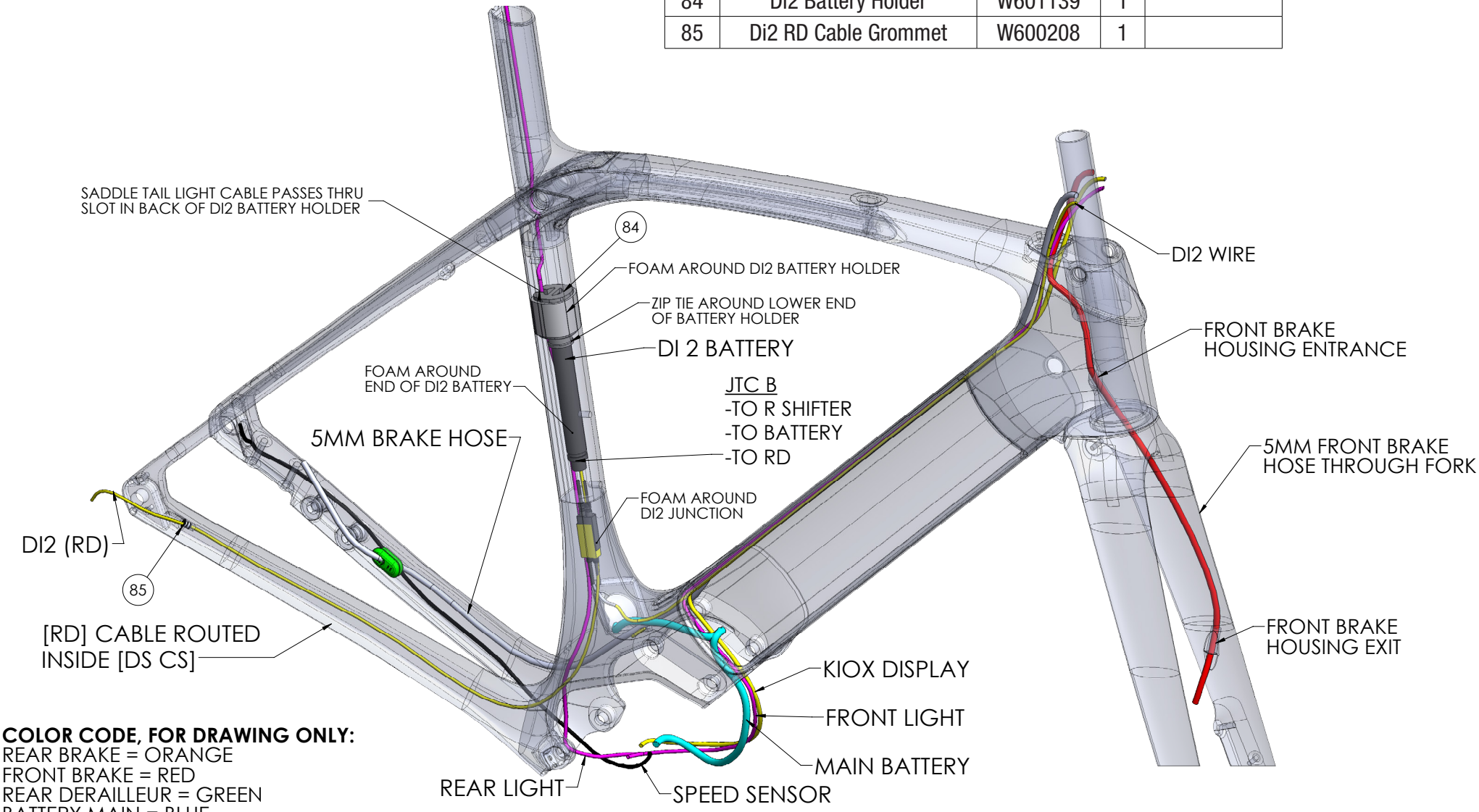

COLOR CODE, FOR DRAWING ONLY:
REAR BRAKE = ORANGE
FRONT BRAKE = RED
REAR DERAILLEUR = GREEN
BATTERY MAIN = BLUE
LIGHTS POWER = PURPLE
KIOX DISPLAY = YELLOW
SPEED SENSOR = BLACK
DI2 WIRE = YELLOW

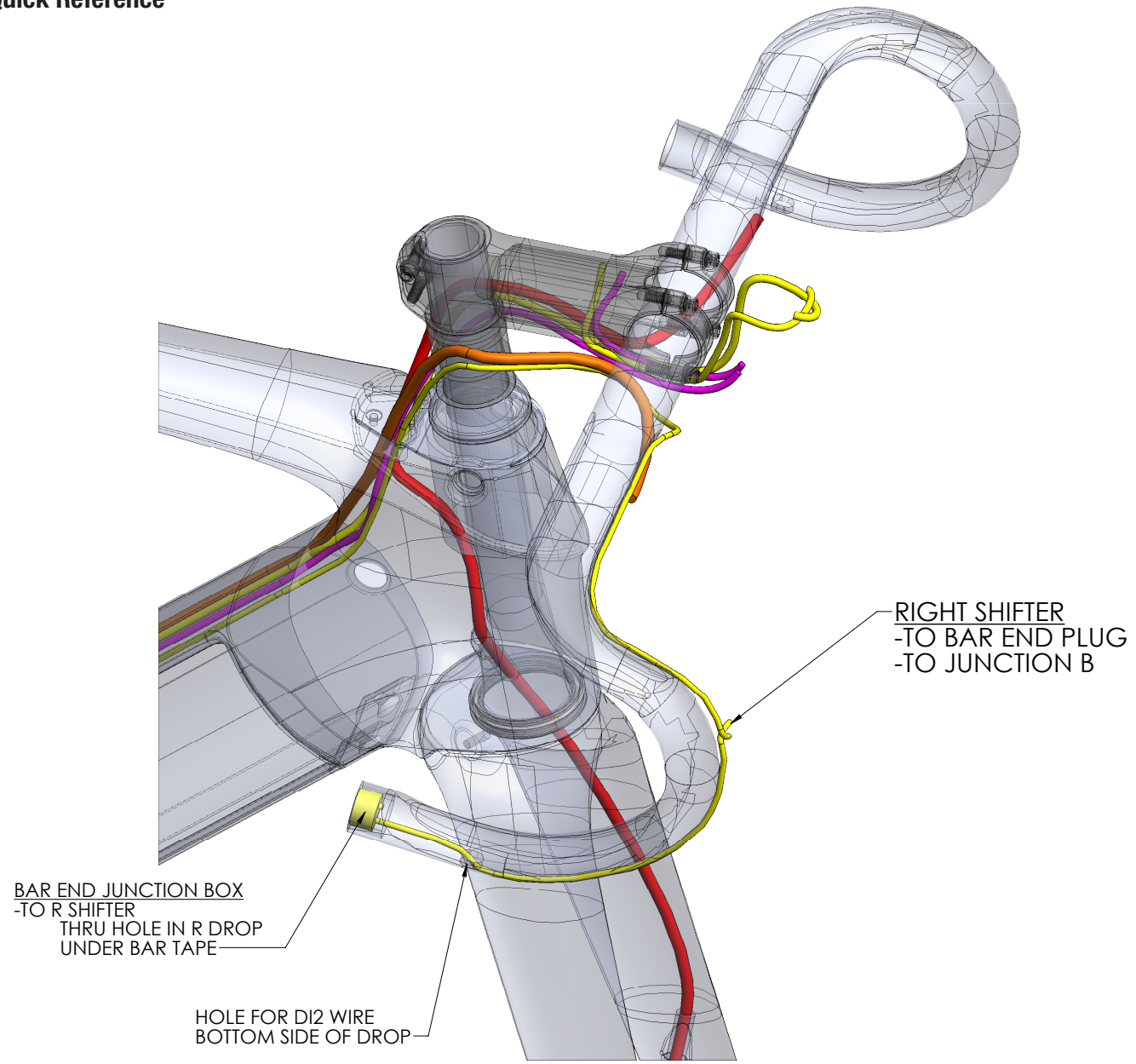
RIGHT SHIFTER
-TO BAR END PLUG
-TO JUNCTION B
BAR END JUNCTION BOX
-TO R SHIFTER
THRU HOLE IN R DROP
UNDER BAR TAPE
HOLE FOR DI2 WIRE
BOTTOM SIDE OF DROP