

2026 DOMANE+ ALR

SERVICE MANUAL

Contents

Routing

Routing — mechanical

Routing — AXS

E-system

Motor Wiring — e-shift with Smart Box

Motor Wiring — mechanical shifting

Charge port cover

Range extender

Remote, display, Smart Box

Remote and display

Install the display

Speed sensor



Drive unit

Install the drive unit

Remove the drive unit

Motor cover

Battery mounts and charge level

Battery

Cable tray

Headset



RCS Pro headset

RCS Pro spacers

Install the RCS Pro



RCS Universal headset

RCS Universal spacers

Install the RCS Universal

Frame

Lockring and cranks

Install the lockring and crank

Universal derailleur hanger (UDH) and axles

Chainkeeper

Brake mount adapters

Fender mount

Frame mounts and down tube guard

Bottles and bag

Specifications

Copyright 2025 Trek Bicycle Corporation All Rights Reserved

About this manual

Scope

This manual contains parts diagrams, specifications (such as grease and torque values), instructions, part numbers, and helpful tips. It does not contain instructions for all components (such as brake calipers). Refer to the original manufacturer for more information.

Replacement parts

Trek recommends using only Trek OEM (original manufacturer) replacement parts.

Additional info

Additional manuals are available at Trekbikes.com/manuals.

- Owner's Manual — comprehensive instructions that come with your bicycle
- TQ Systems E-bike Owner's Manual — detailed instructions on the e-system found under Electric bikes > 2026

Further instructions are also available at TQ-ebike.com.

Inspect the bike

Please inspect the bicycle carefully after removal from the box and all packaging:

- Inspect all surfaces of the bicycle for damage, pay special attention to the fork legs and the seat stays (both inside and outside surfaces).
- If packaging damage is located near the front of the bicycle, remove the fork from the frame and inspect the steerer tube for damage.

Legend



Cable (zip) tie

Nm Torque value

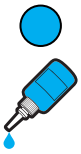

Apply appropriate threadlocker



Apply Bontrager grease

Safety

WARNING

Before performing any work on an e-bike, completely power off the e-system.

An active e-system may start unexpectedly and cause injury.

WARNING

Properly tighten hardware

Always tighten hardware to the specified torque. Over-tightening hardware could deform or break the hardware or components. Under-tightening or over-tightening hardware could cause hardware or components to become loose. Either situation could damage the bicycle and result in injury to the rider.

WARNING

Reapply threadlocker

All reused-fasteners with pre-applied threadlocker must be cleaned with isopropyl alcohol and have new threadlocker applied before re-assembly. If threadlocker is not applied, the fasteners may loosen which could damage the bicycle and result in injury to the rider.

IMPORTANT: All repairs, assembly, servicing and maintenance must be performed only by TQ-authorized bicycle dealers.

We value your feedback

We hope you find our service manual useful. To help us improve, please take a brief survey about your experience. We periodically update our manuals and your input ensures we provide the highest quality user experience.



For product help or inquiries:

Please visit trekbikes.com/contactus or call Customer Care.

Routing — mechanical

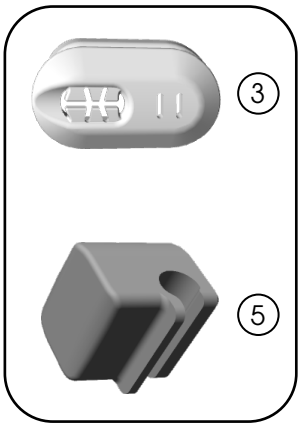

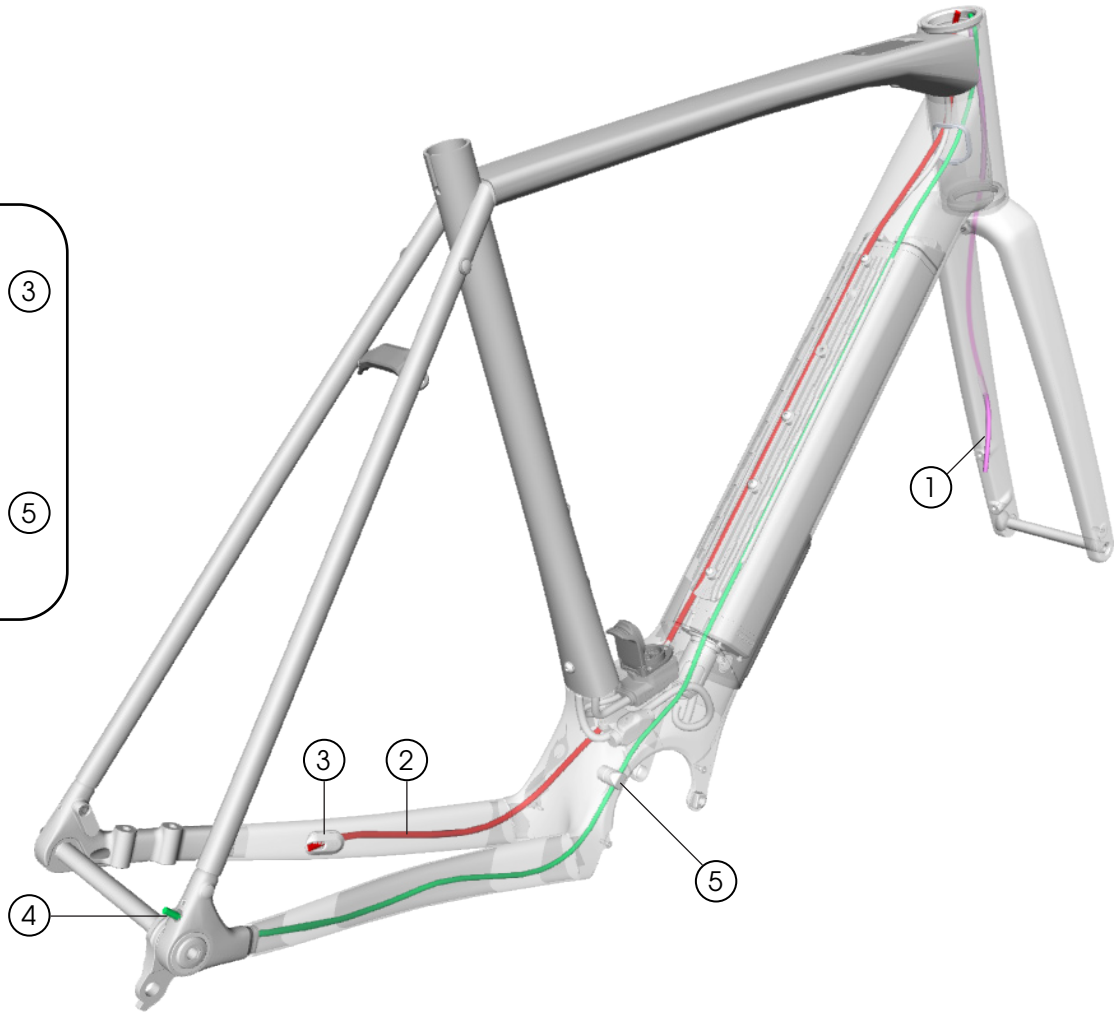

1. Front brake hose
2. Rear brake hose
3. Housing grommet — *W330578*
4. Rear derailleur cable
5. D-shaped grommet — *W5329367*

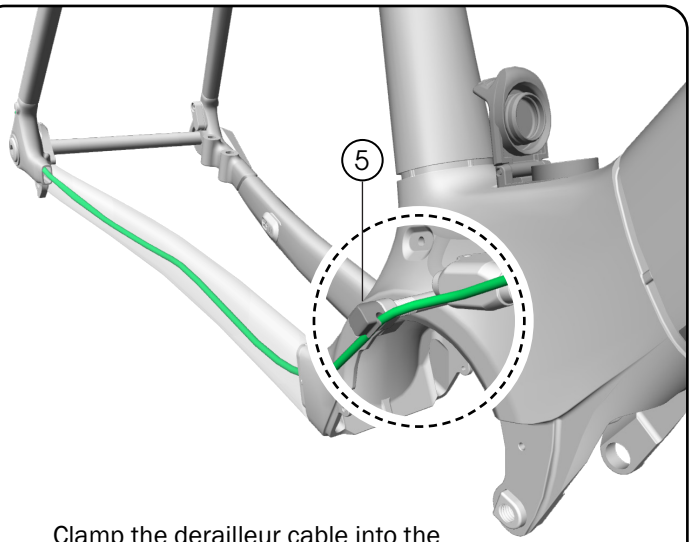

Clamp the derailleur cable into the grommet inside the motor mount.

See Drive unit.

Routing — AXS

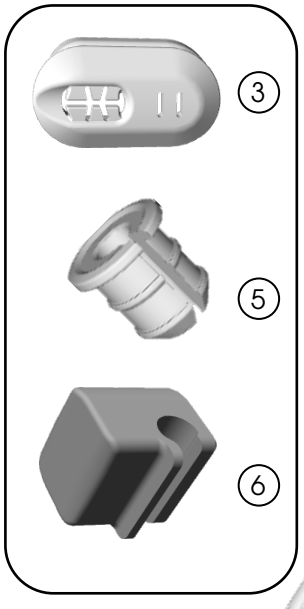



1. Front brake hose
2. Rear brake hose
3. Housing grommet — *W330578*
4. SRAM e-shift cable — *W5312654*
5. Cable exit grommet — *W600208*
6. D-shaped grommet — *W5329367*
7. TQ e-shift cable — *W5312855*

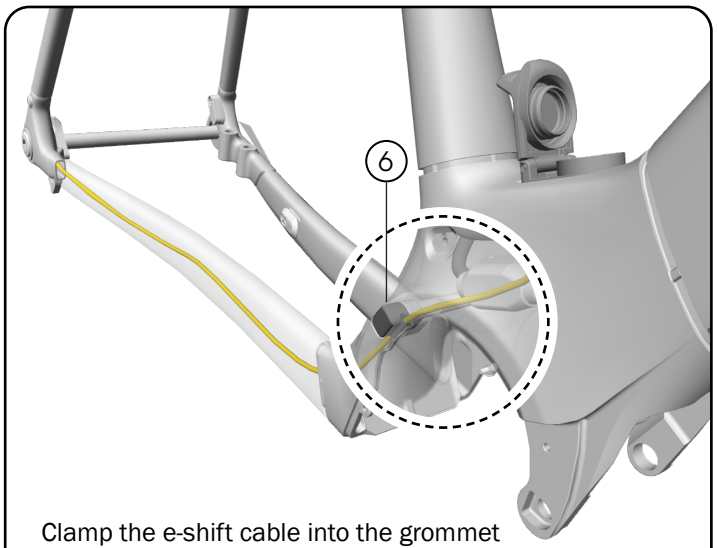

Clamp the e-shift cable into the grommet inside the motor mount.

See Drive unit.

Motor Wiring — e-shift

with Smart Box

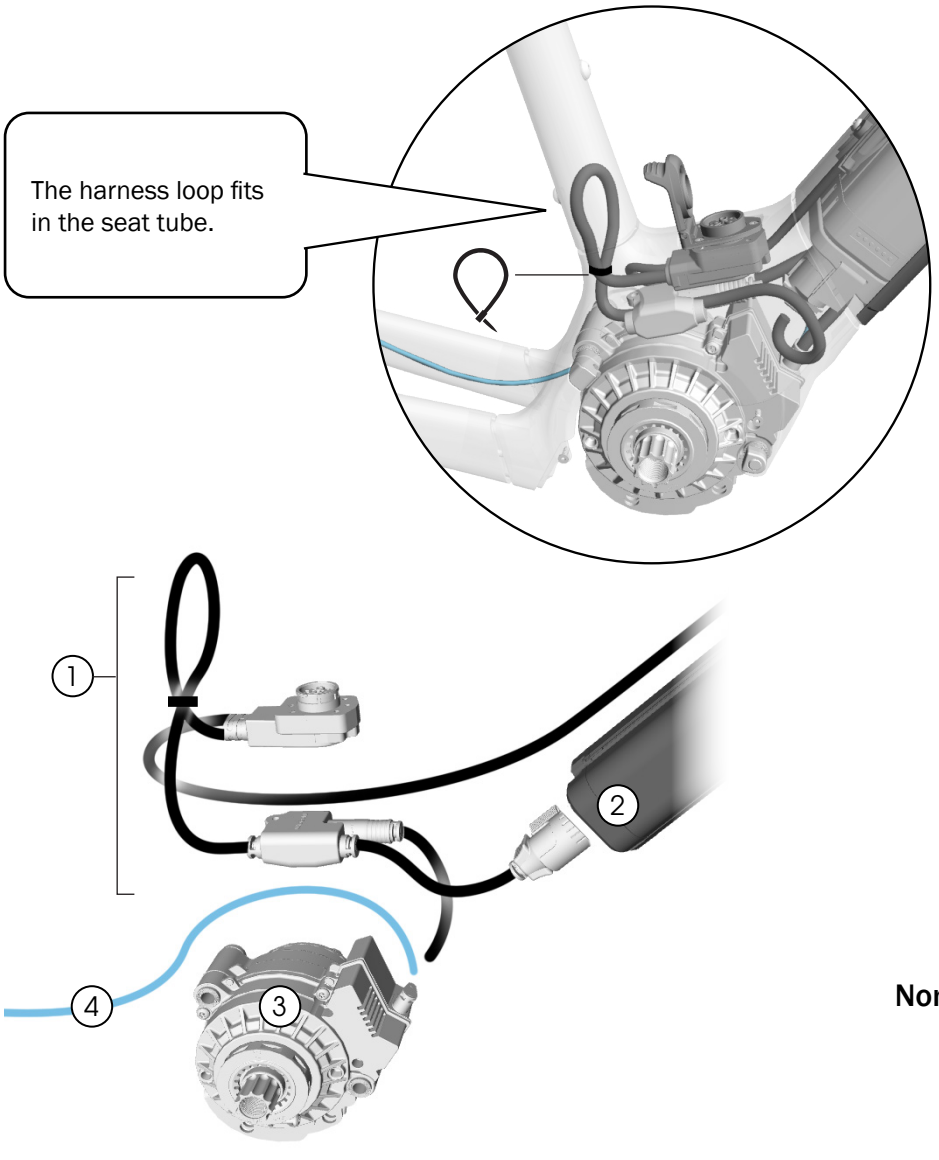

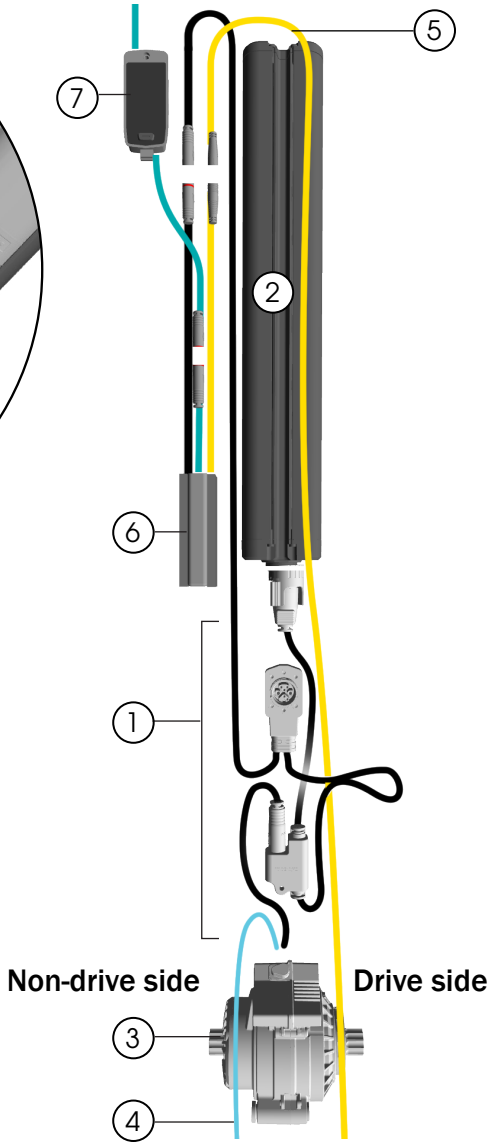

1. Wiring harness — *W5320676*
2. Battery, 360 Wh — *5289554*
3. Drive unit (HPR60) — *5343943*
4. Speed sensor cable
5. TQ e-shift cable — *W5312855*
6. TQ Smart Box* — *5289564*
7. TQ display — *5343942*

*Smart Box is needed for electrical shifting only.

Motor Wiring — mechanical shifting

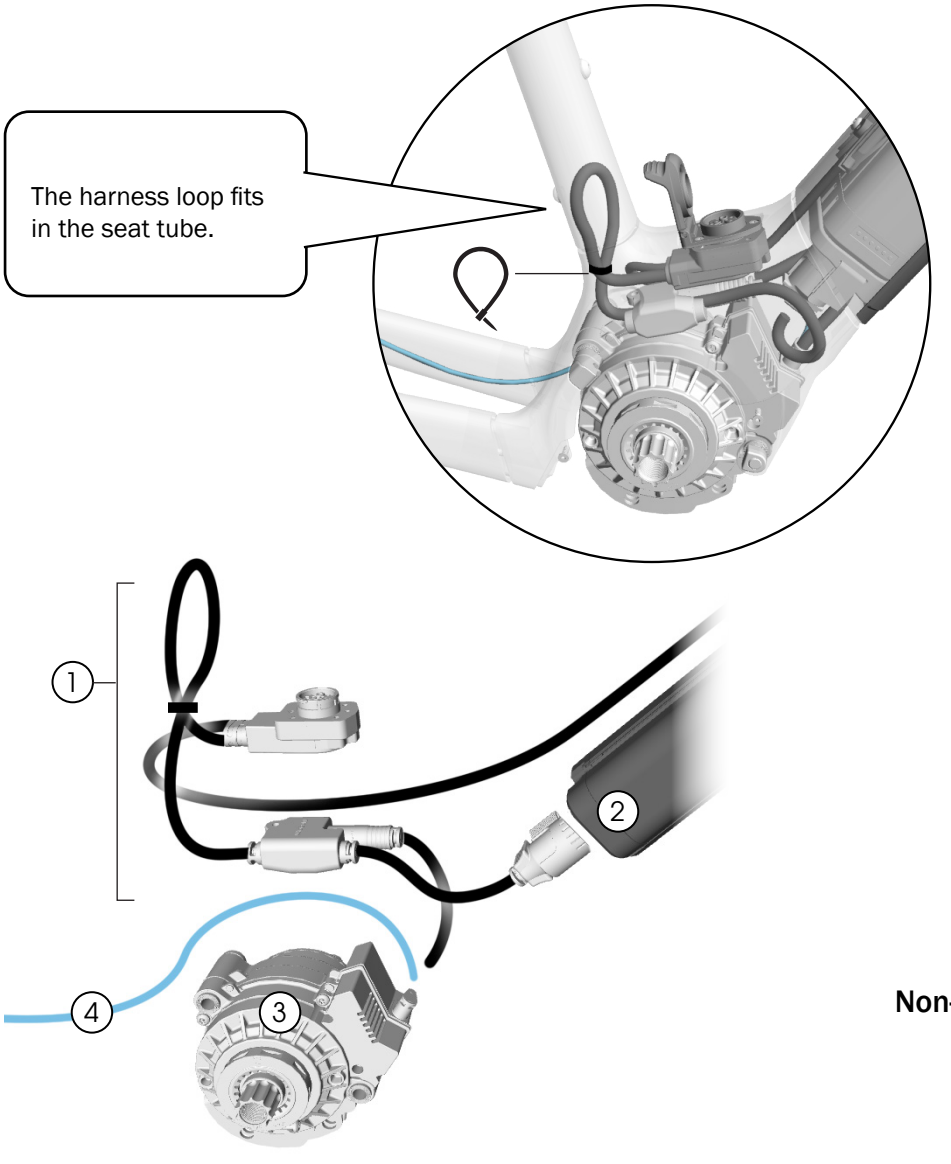

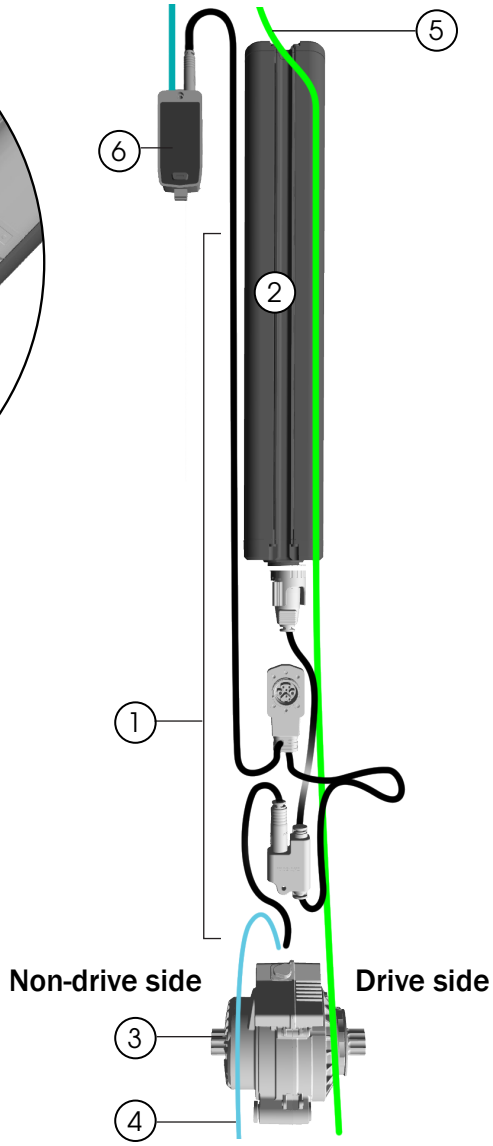

1. Wiring harness — *W5320676*
2. Battery, 360 Wh — *5289554*
3. Drive unit (HPR60) — *5343943*
4. Speed sensor cable
5. Rear derailleur cable
6. TQ display — *5343942*

Cable tray

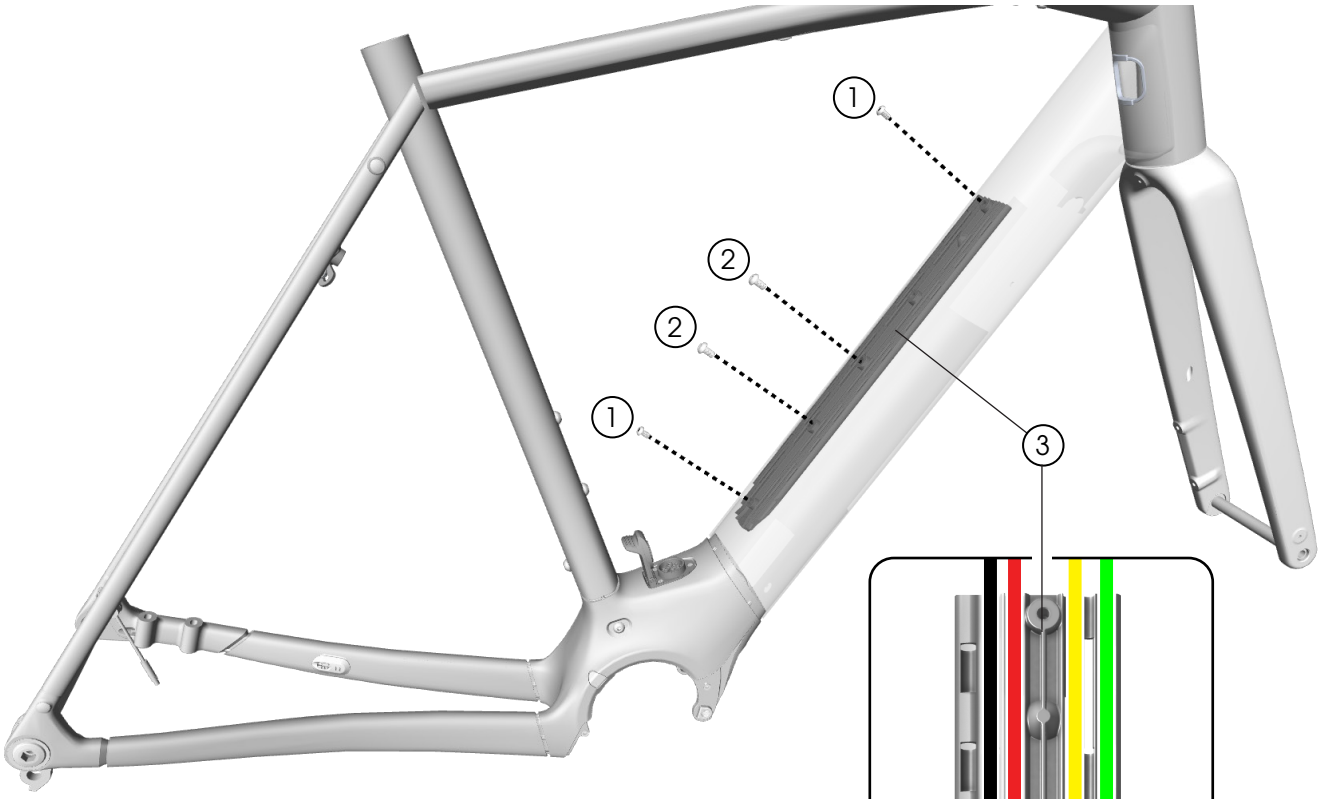

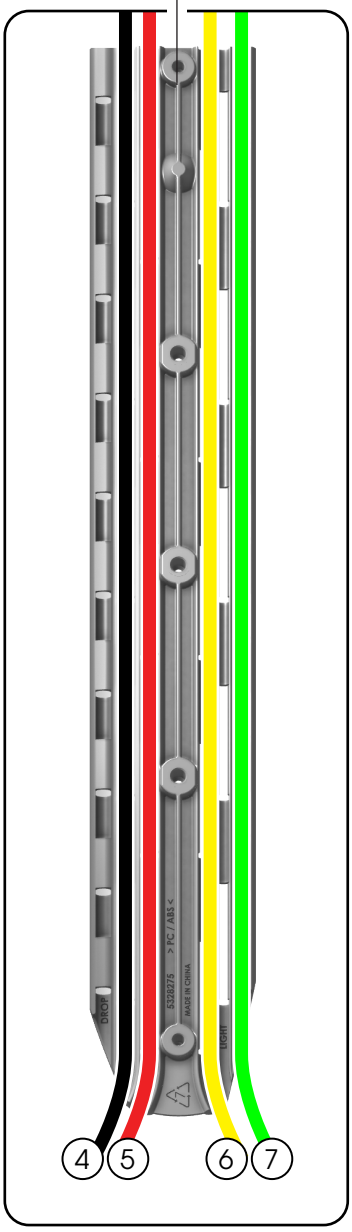

1. Fastener (M4 x 8 mm) — *5342162*

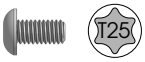

2. Fastener (M5 x 10 mm) — *5332051*

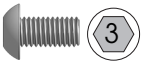

3. Cable tray — *W5328275*
4. Wiring harness — *W5320676*
5. Rear brake hose
6. TQ e-shift cable — *W5312855*

   or

7. Rear derailleur cable

Remote, display, and Smart Box

Smart Box required for e-shift

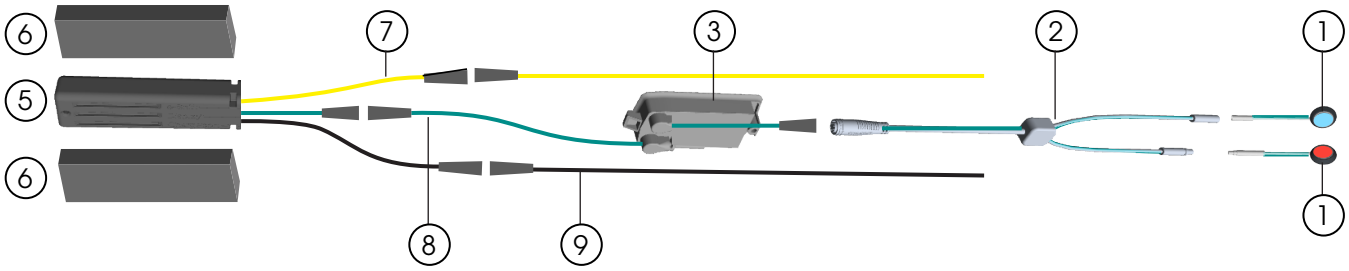

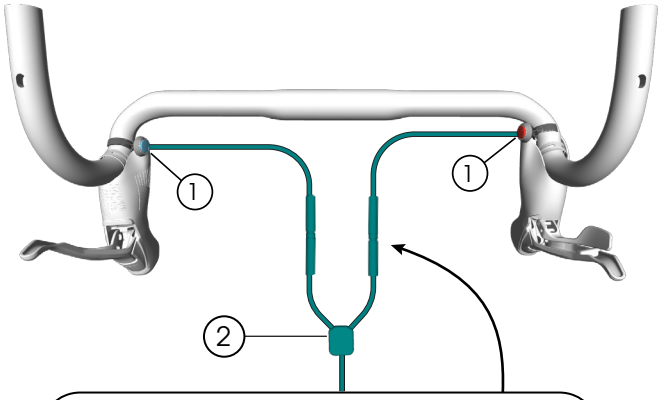

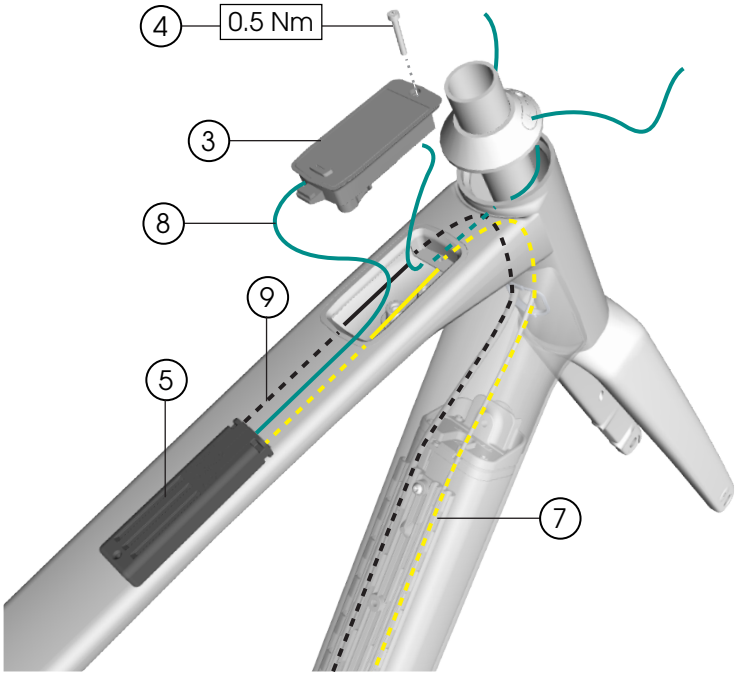

TIP: Label the remotes with tape to easily identify left and right during installation.

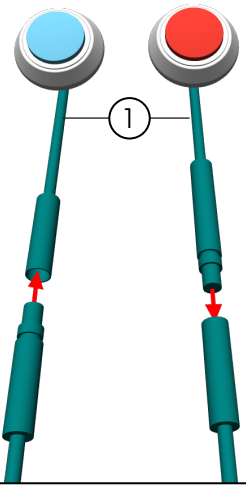

1. Remote assist buttons — *W5315683*
2. Cable y-splitter — *W5286202*
3. TQ Display — *5343942*
4. Bolt (M3 x20 mm) — *W5280750*



5. Smart Box — *5289564*
6. Foam blocks — *5342077*
7. TQ e-shift cable — *W5312855*
8. Display cable
9. Wiring harness — *W5320676*

Remote and display

Smart Box not required for mechanical shifting

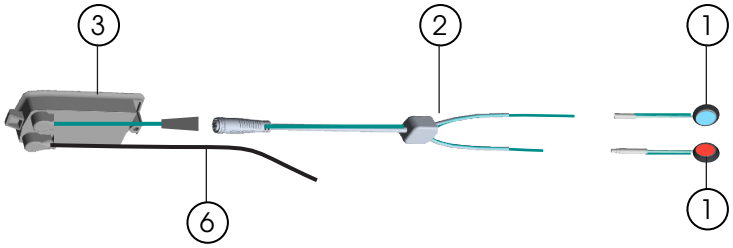

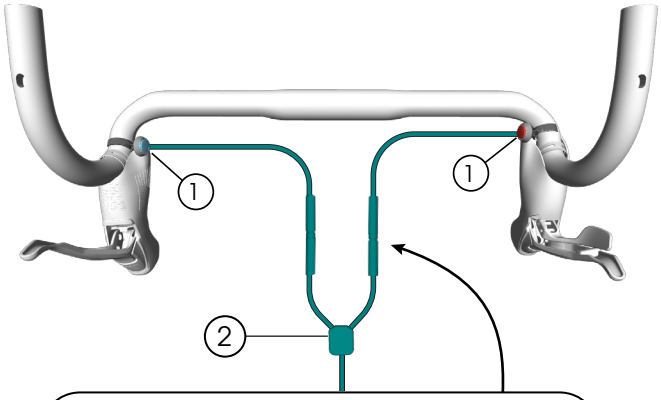

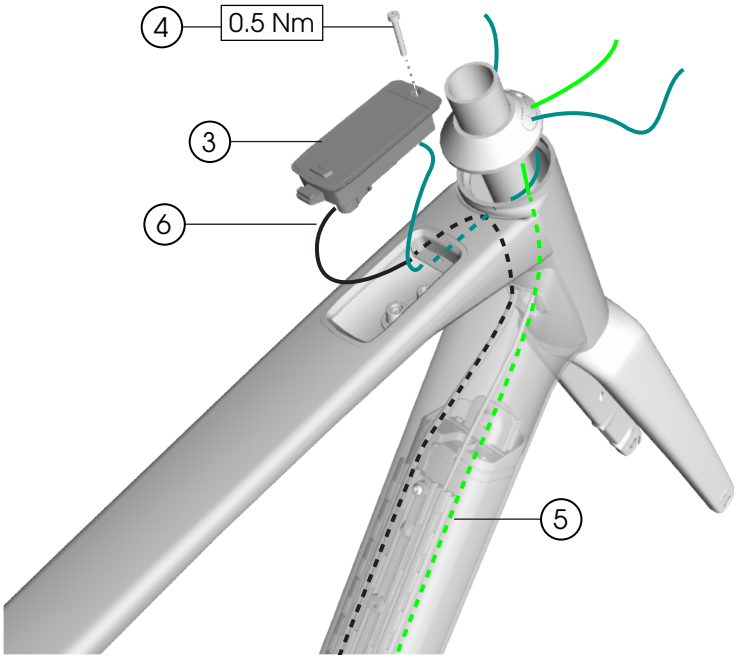

TIP: Label the remotes with tape to easily identify left and right during installation.

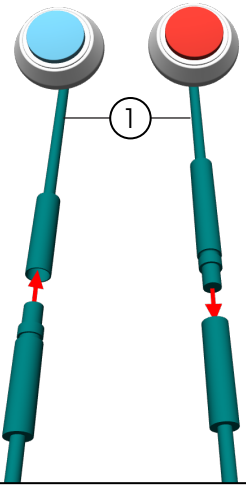

1. Remote assist buttons — *W5315683*
2. Cable y-splitter — *W5286202*
3. TQ Display — *5343942*
4. Bolt (M3 x20 mm) — *W5280750* 

5. Rear derailleur cable
6. Wiring harness — *W5320676*

Install the display

1. Insert the Smart Box with foam.
TIP: Push the Smart Box as far as possible into the top tube for better wire clearance.

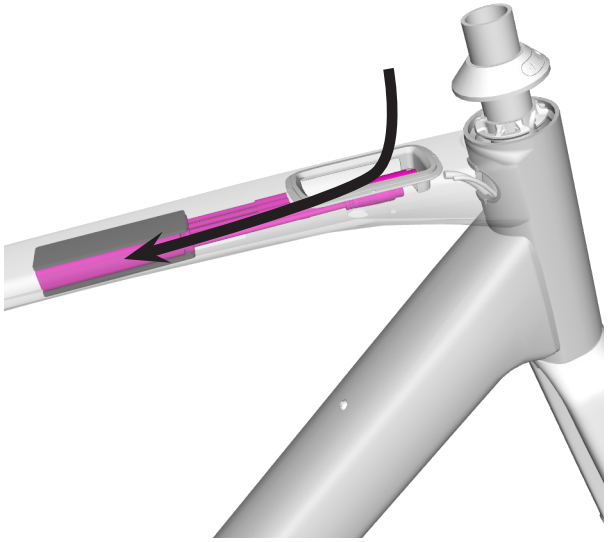

2.

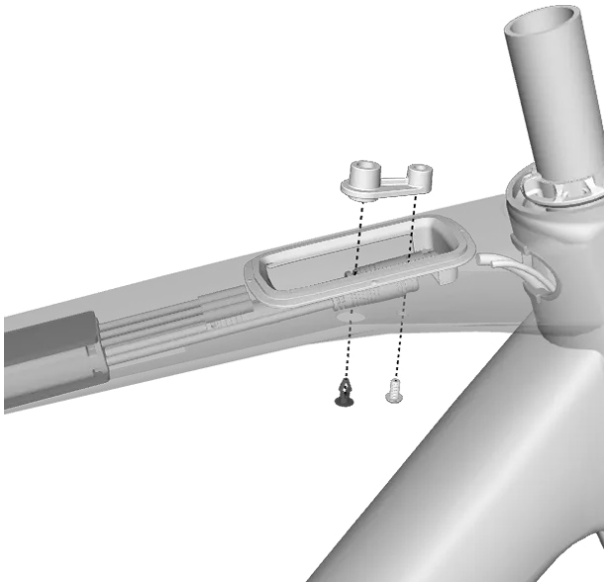

NOTE: Top tube bag mount is not compatible with XS frame.

3. Insert the remote buttons through the head set split ring. Connect to them to the y-splitter cable inside the top tube.

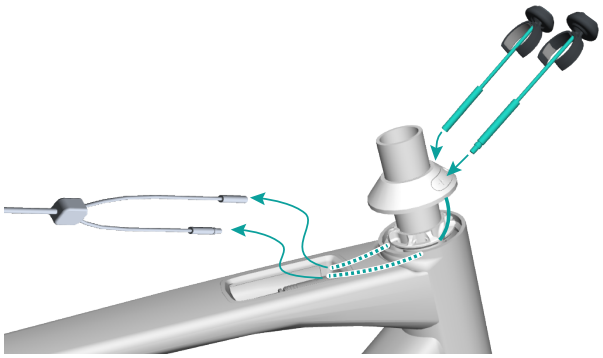

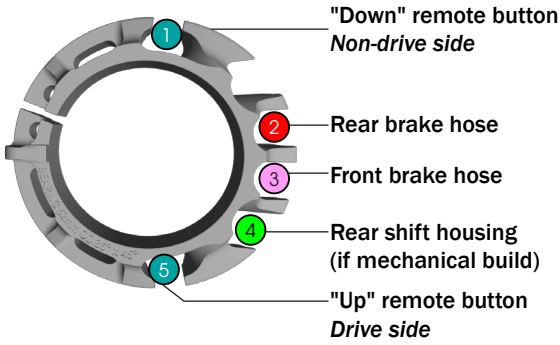

4.

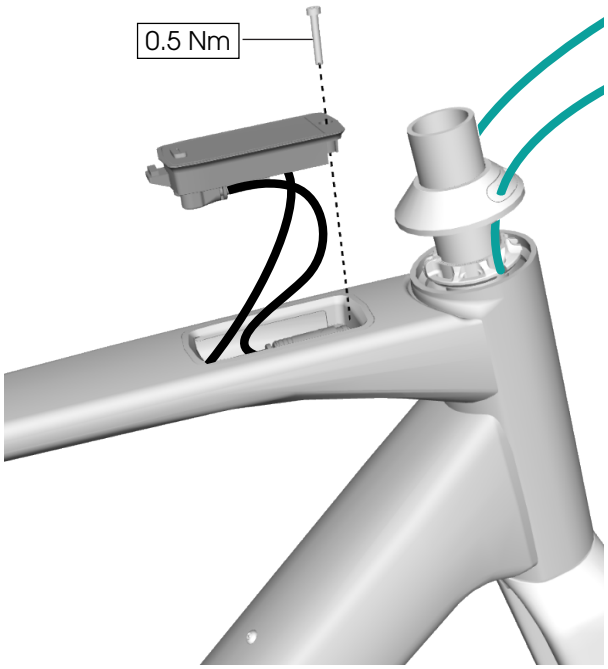

Motor cover

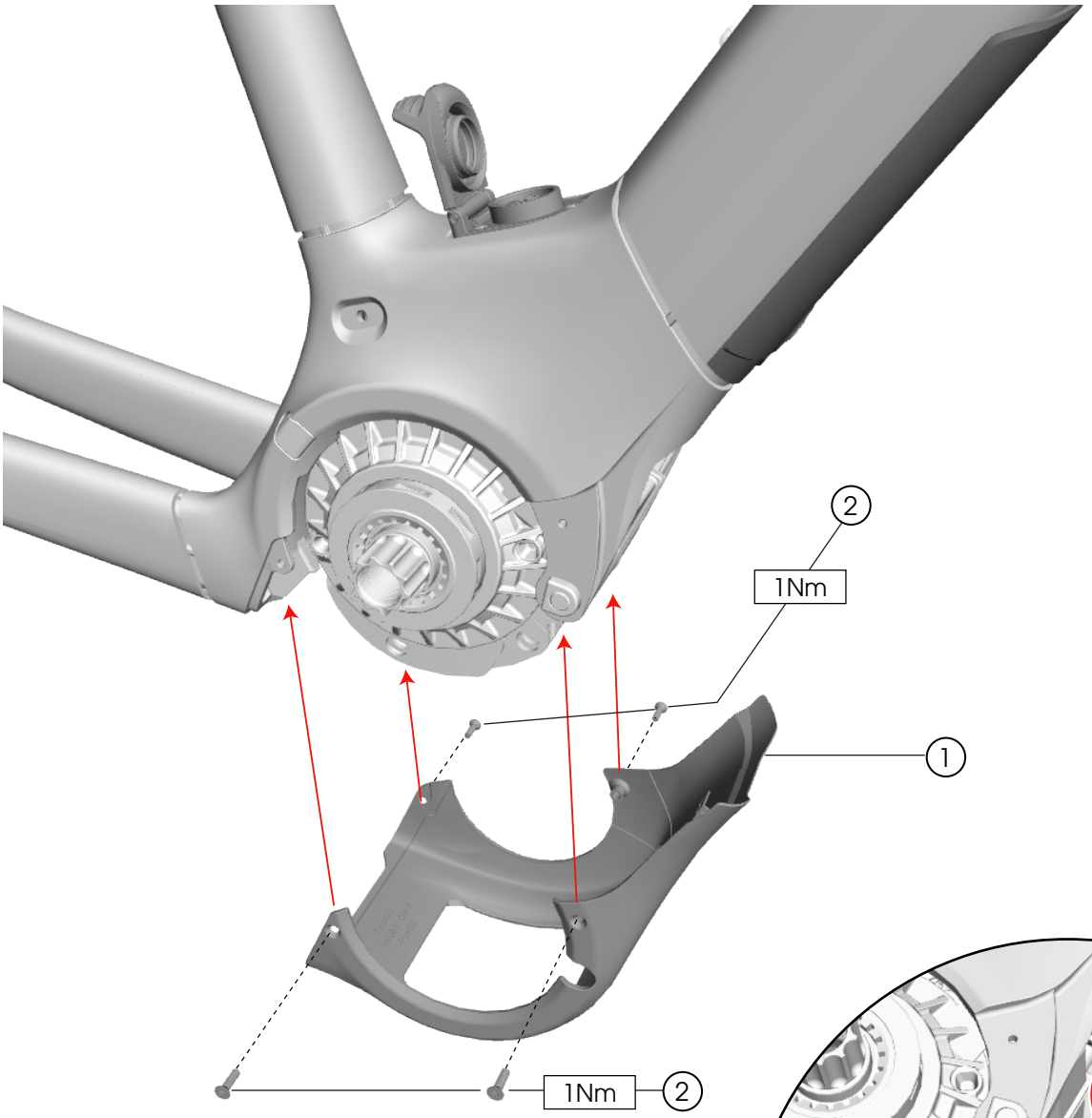

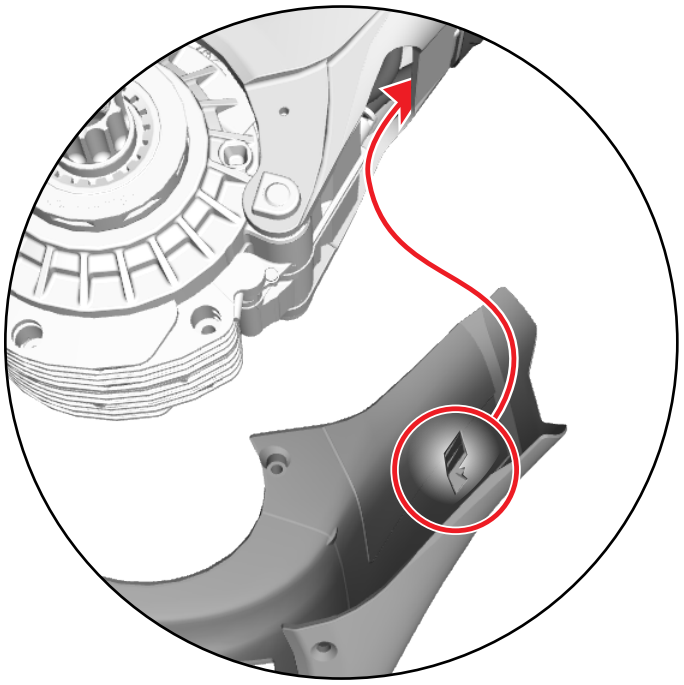

1 Motor cover — *W5329502*

2 Fasteners (M3 x 10 mm)



Drive unit

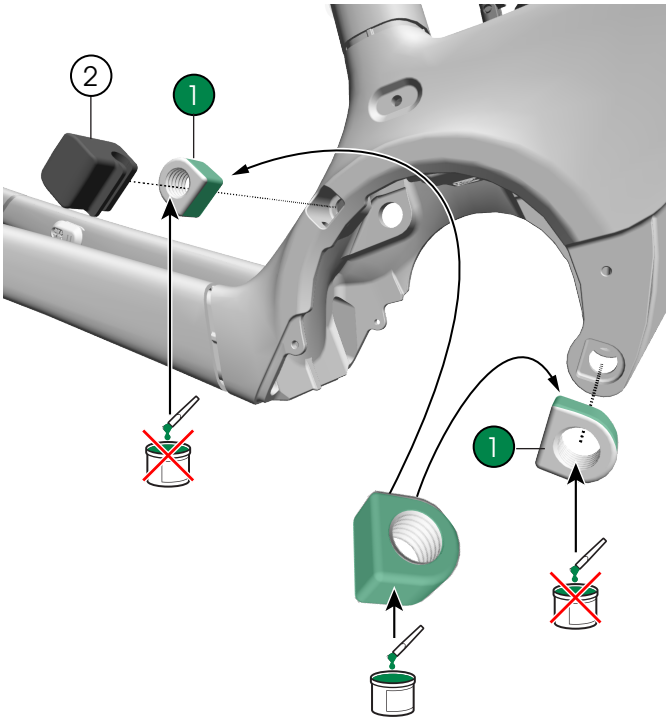

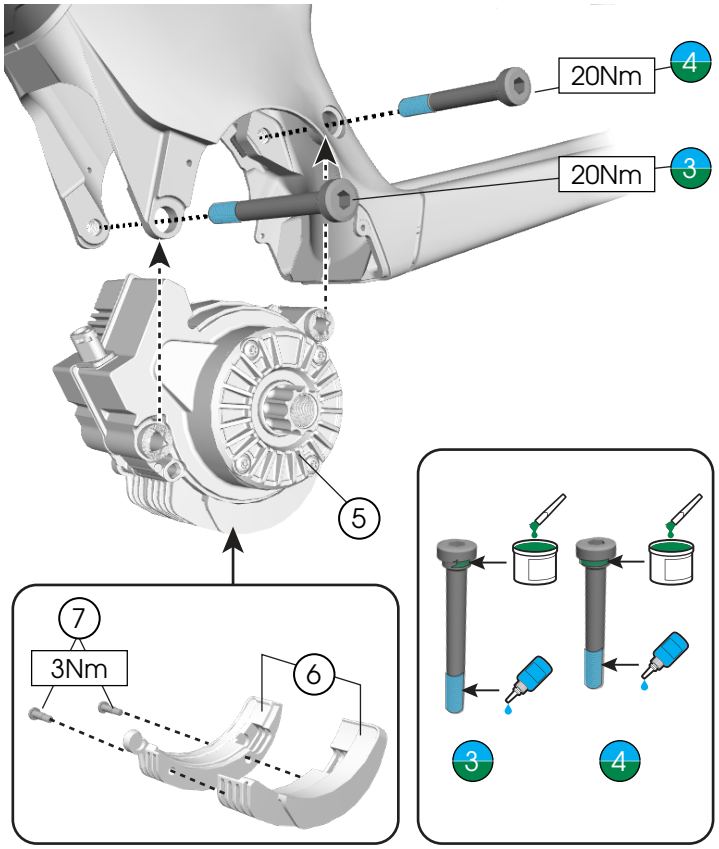

1. D-nuts — *W5304866*
2. D-shaped grommet — *W5329367*
3. Front bolt (76.5 mm)
4. Rear bolt (62 mm)

— *5289570*

5. Drive unit (HPR60)
6. Cooling fins — *5343944*
7. T20 security fasteners

— *5343943*

Remove the drive unit

1. Remove the motor cover.

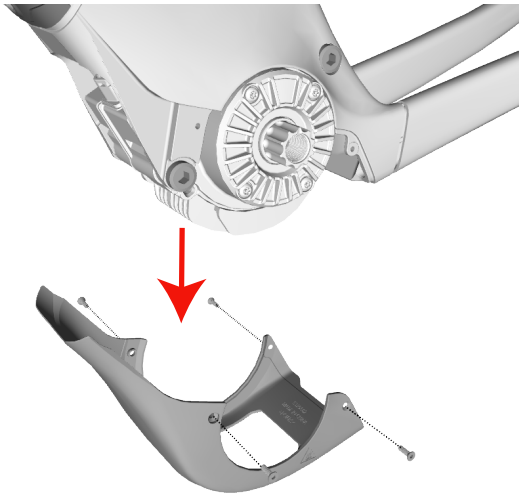

2. Before fully removing the drive unit from the frame, grab the connectors and unplug the speed sensor and drive unit cables.

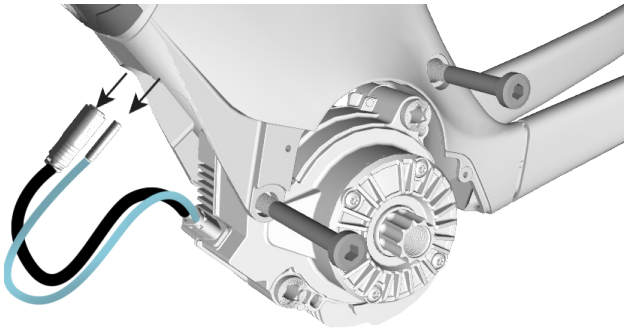

NOTICE: Unplug the speed sensor by the connector — not the cable itself — or you may damage the cables.

Cable connection tool

Use the cable connection tool (*W5304531* sold aftermarket) to remove the plugs from the battery and wiring harness.

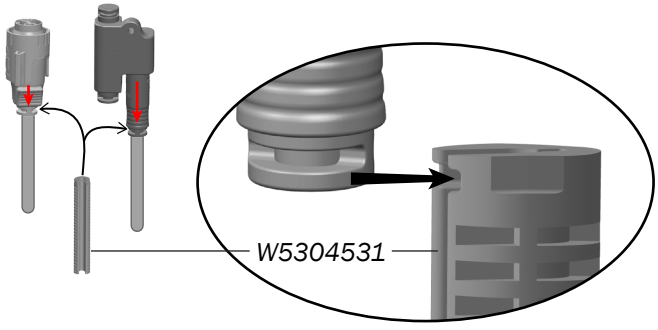

3. Remove the drive unit fasteners.

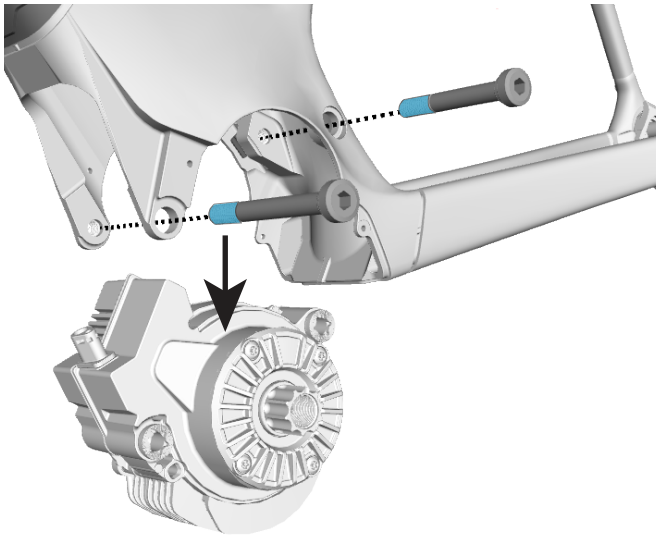

Install the drive unit

If replacing the drive unit, verify the widths match the frame. Adjust the compensation screws if necessary.

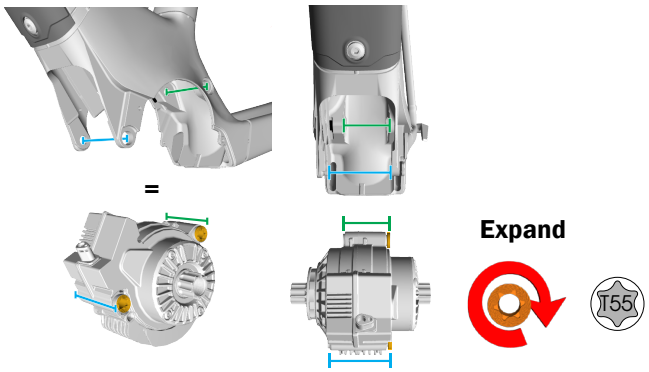

If replacing cooling fins — clean the underside of the drive unit before installing. See the HPR60 service manual at TQ-ebike.com > Manuals for further information.

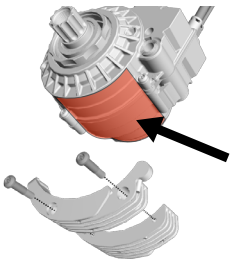

1. Loosen the charge port cover.
NOTE: This allows room to tuck the y-splitter into place.

2. Fit the cables and cords as shown in motor wiring. Ensure the wire harness is wrapped and the loop placed into the seat tube.

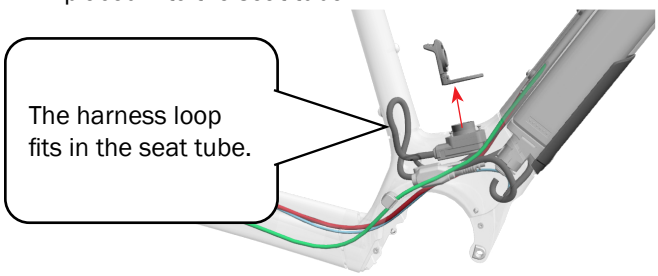

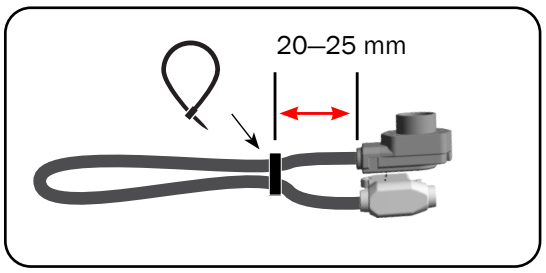

3. Install D-nuts and grommet.

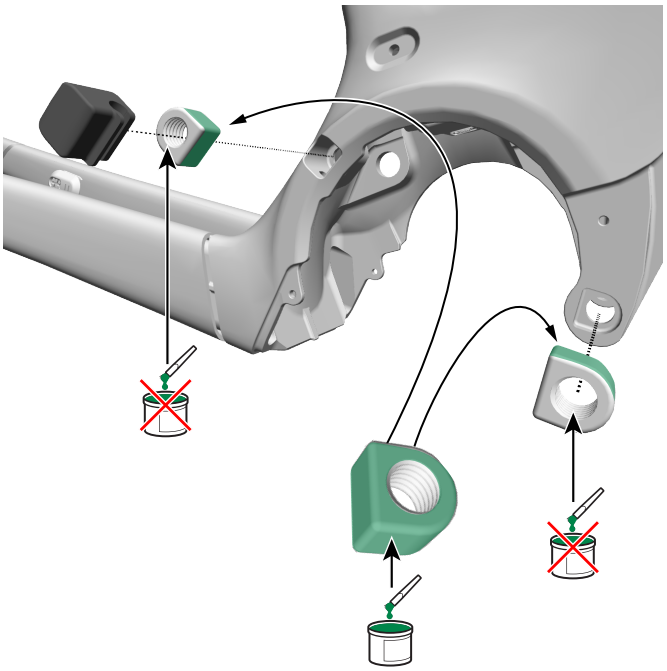

4. Secure the rear derailleur cable or e-shift cable into the grommet.

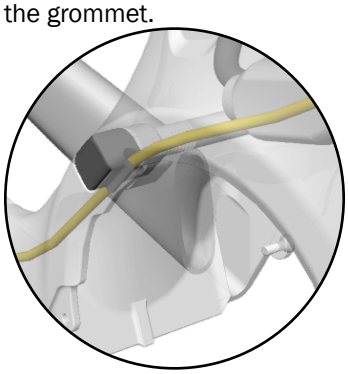

5. Plug the power and speed sensor into motor.

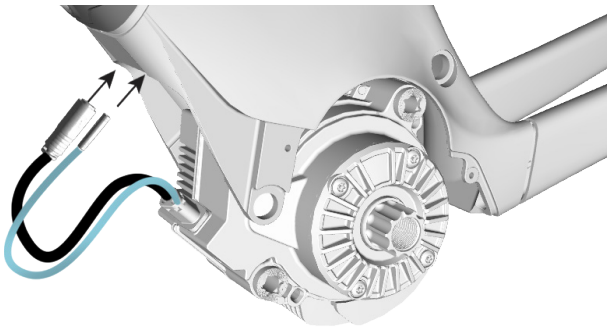

Install the drive unit (continued)

6. Install the motor and secure bolts.

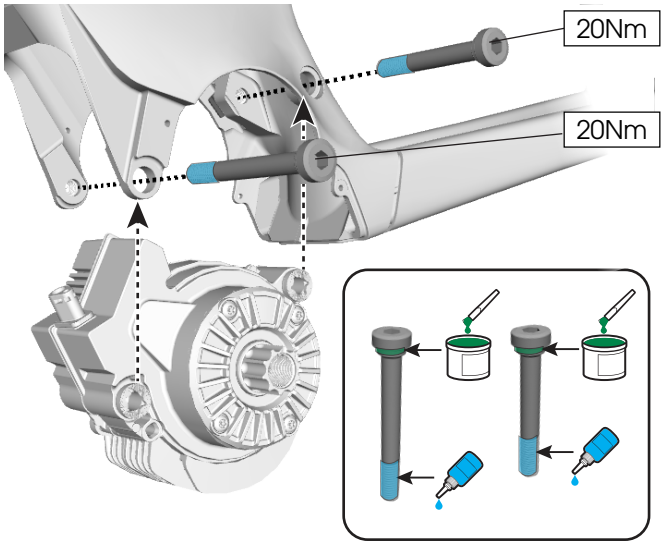

7. Secure the charge port cover.

8. Install the motor cover.

Battery mounts and charge level

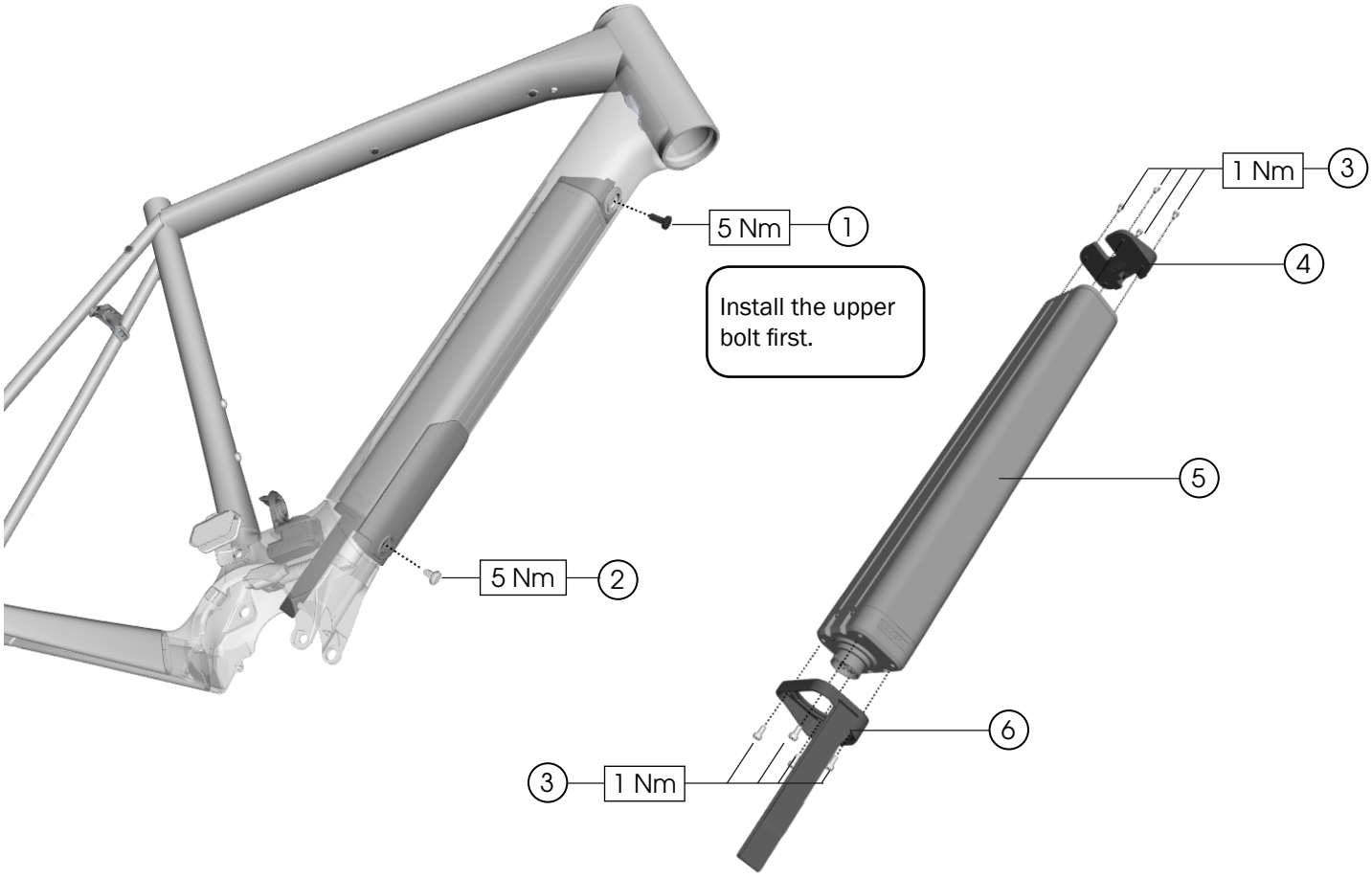

1. Bolt (M6 x 16 mm) — *W5275266*
2. Bolt (M6 x 10 mm) — *W5330479*
3. Bolt (M3 x 6 mm) — *W581747*
4. Upper bracket — *W5298492*
5. Battery, 360 Wh — *5289554*
6. Lower bracket — *W5330522*

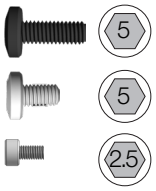

Charge level

The LEDs on the battery indicate the charge level (each LED represents 20% of the battery charge). To view the charge level with the battery removed, cover the light sensor for a few seconds with your finger, then remove.

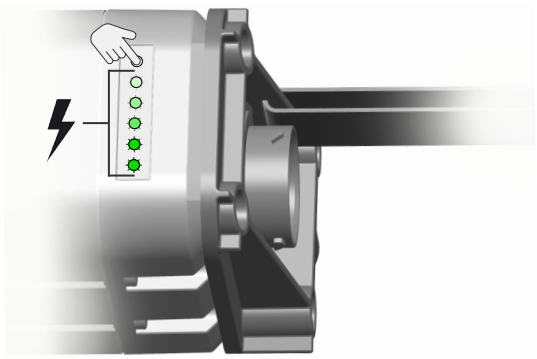

Battery

Remove the battery

1. Remove the drive unit cover, drive unit assembly, charge port cover, and charge port.



2. Remove the battery mount bolts (1, 2).

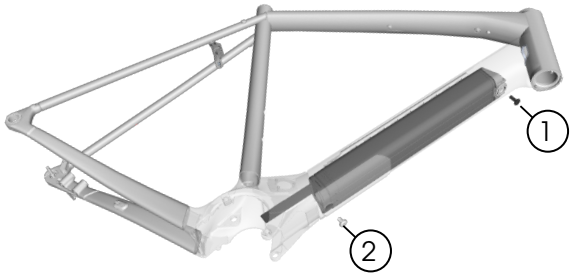

3. Use the fabric battery loop to pull out the battery slightly so you can reach the battery connector.
4. Rotate the battery connector counter-clockwise and pull out the battery.

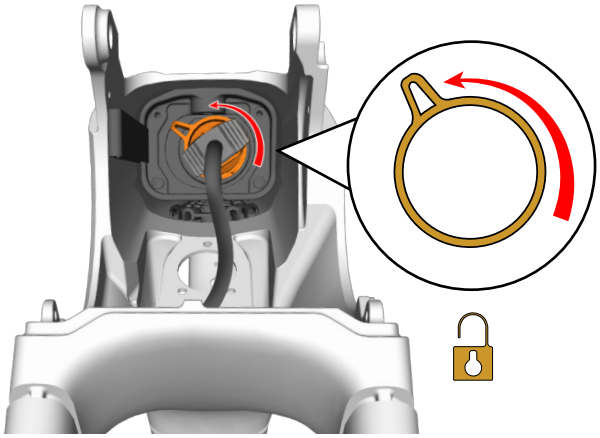

Install the battery

1. Use the battery mount bolts to install the battery. Install 1 first, then 2.

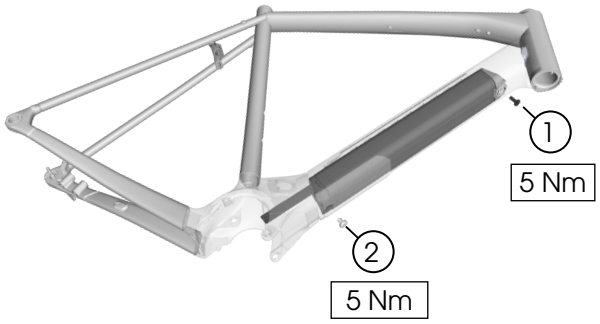

2. Insert the battery connector into the battery until you hear a “click” sound.

   TIP: Use the cable connection tool.

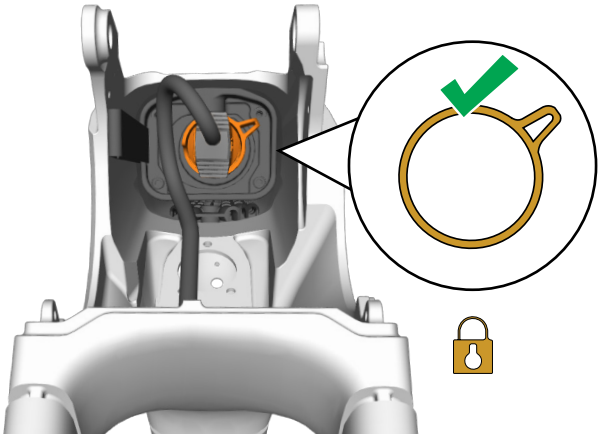

Speed sensor

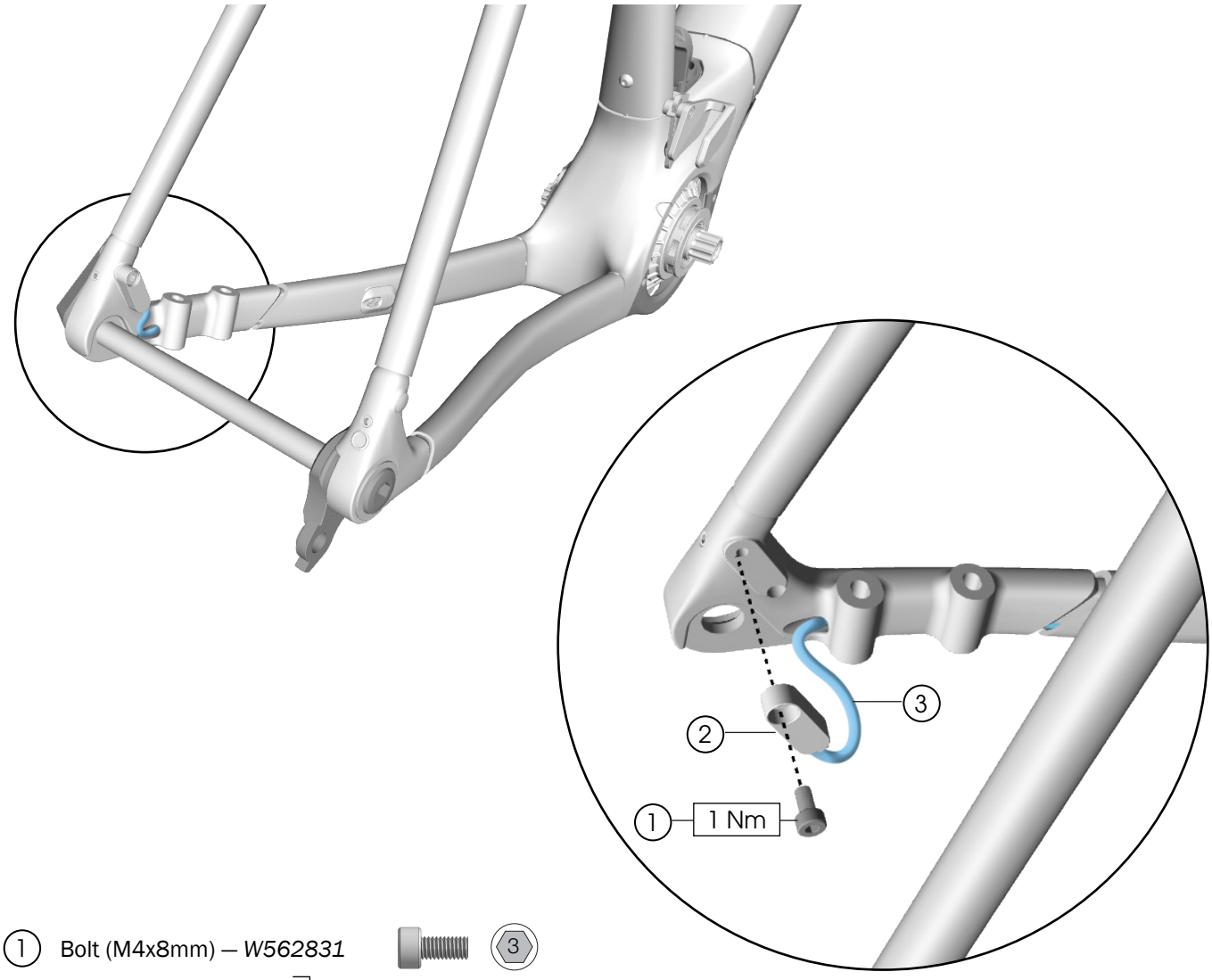

1. Bolt (M4x8mm) — *W562831* 3
2. Speed sensor
3. Speed sensor wire

W5285131

Charge port cover

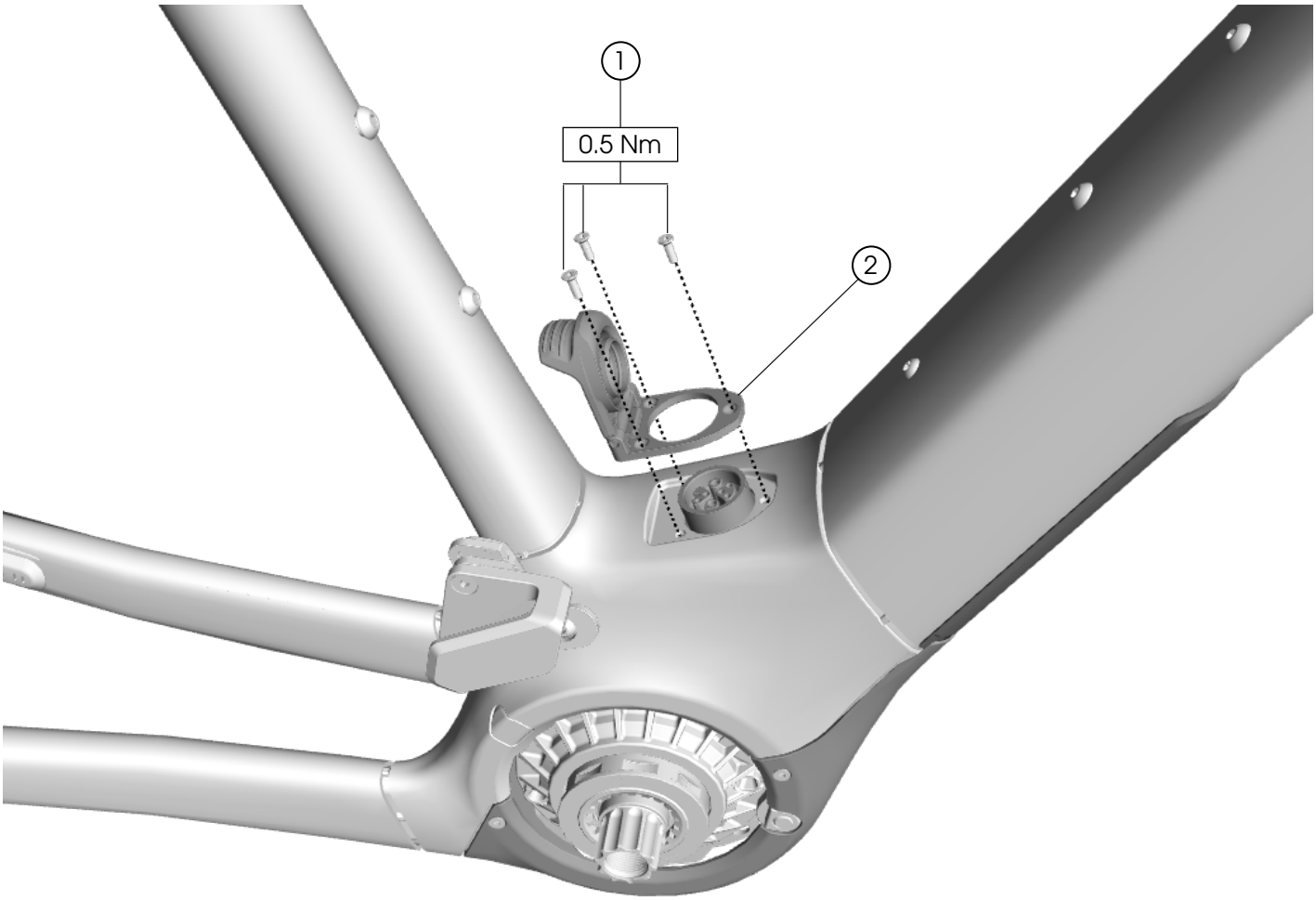

1 Fasteners (M2.5 x 8 mm)



5289578

2 Charge port cover

Replacing the charge port cover

To replace the charge port cover, you may need to remove the drive unit to reach the charge port and hold it in place.

Range extender

NOTE: Range extenders are sold aftermarket.

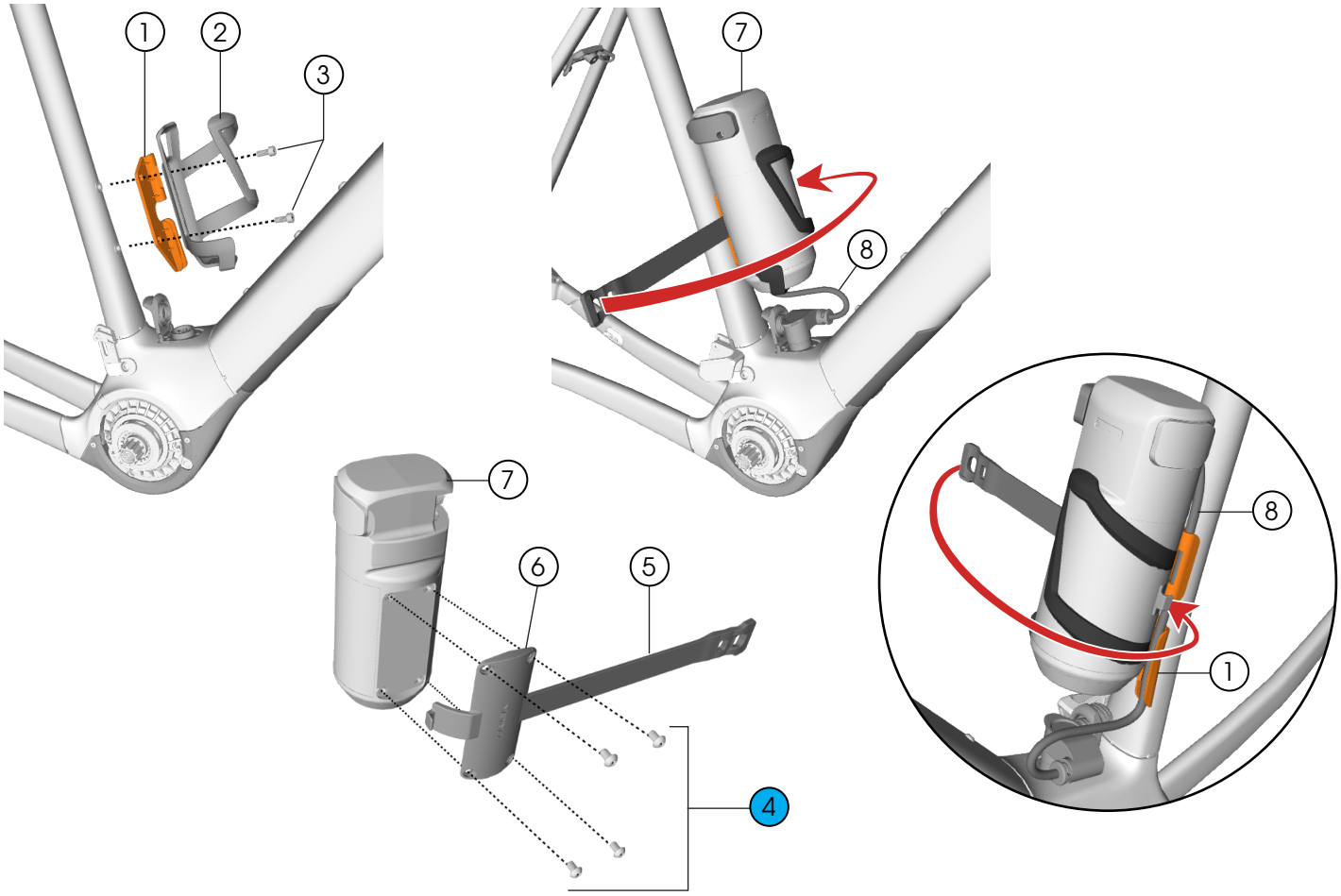

1. Cable guide — *W5300001*
2. Bottle cage — *5324464**
3. Fasteners (M5 x 10 mm) — *W297411*
4. Fasteners (M4 x 6 mm)
5. Strap
6. Back plate
7. Range extender battery — *5289555*
8. Cable — *5289576*

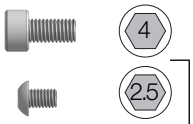

5325177

**black — see Trekbikes.com for full list of options*

RCS Pro headset

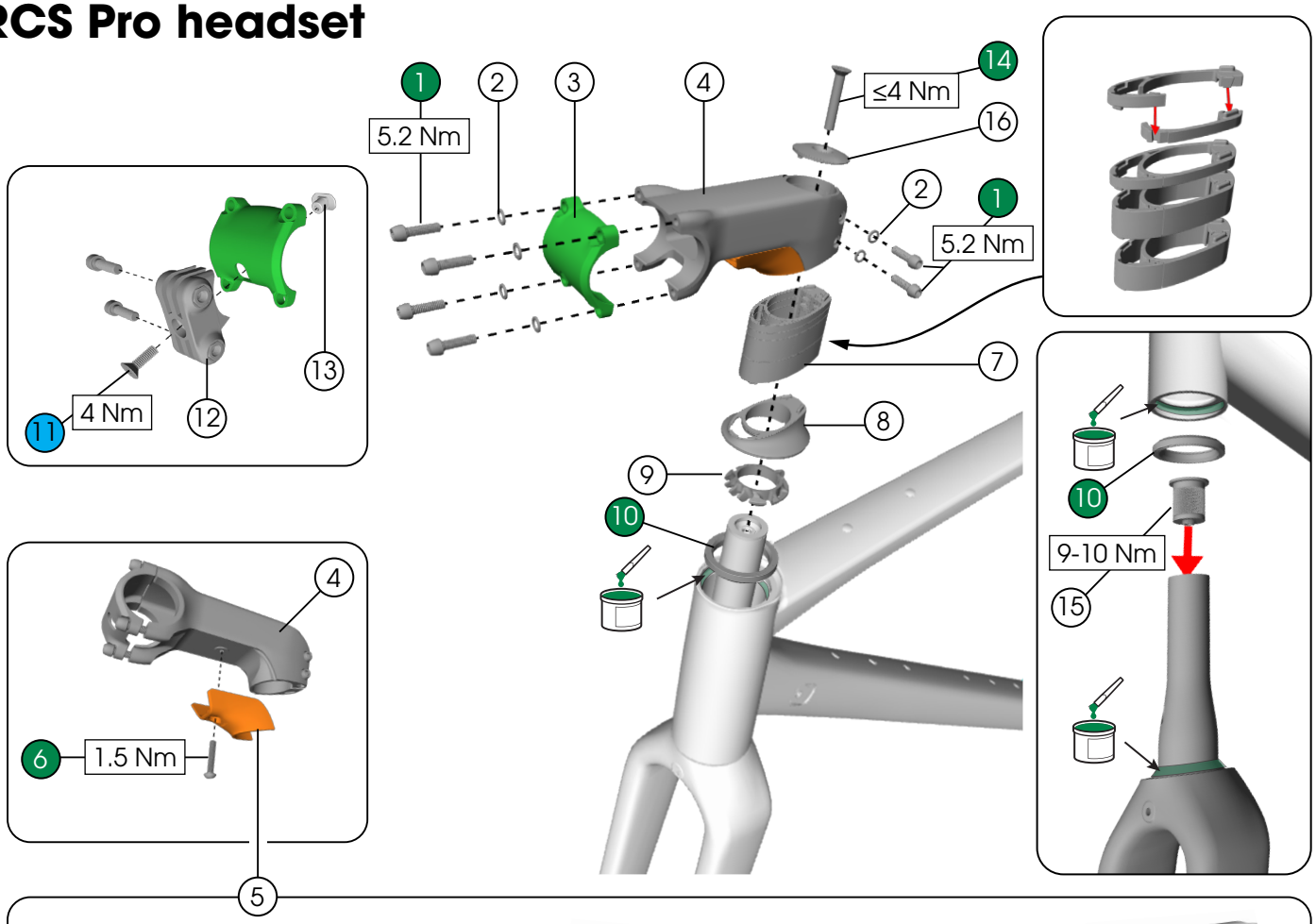

Available routing covers

7° stem

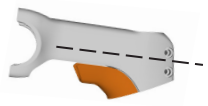

7° x 60/70 mm — *W5274602*

7° x 80/90/100 mm — *W5274603*

-7° stem



-7° x 60/70/80 mm — *W5274599*

-7° x 90/100/110 mm — *W5274600*

-7° x 120/130/140 mm — *W5274601*

1. Fasteners (M5 x 15 mm) — 4
2. Washers (M5)
3. Faceplate
4. RCS Pro stem (-7° x 100 mm)
5. Routing cover
6. Fastener (M4 x 25 mm) — 25

**5274584*

7. Spacers
   - 5 mm — *5296906*
   - 15 mm — *5296905*
8. Bearing top cover — *W5317347*
9. Split ring — *W5315339*
10. Bearings — *W5322818*
11. Fastener (M5 x 12 mm) — 3
12. Duo Blendr base
13. Nut

W5274964

14. Fastener (M6 x 35 mm) — 4
15. Expander plug

W547432

16. RCS Pro top cap — *W5274966*

**see Trekbikes.com for full product list*

RCS Pro spacers

NOTE: If you remove spacers below the stem, you must add the same height of spacers above the stem or cut the steerer tube.

WARNING

Do not exceed 40 mm of headset spacers above or below the stem. If there are more than 40 mm of spacers, the steerer tube could become damaged and break, causing a crash resulting in injury.

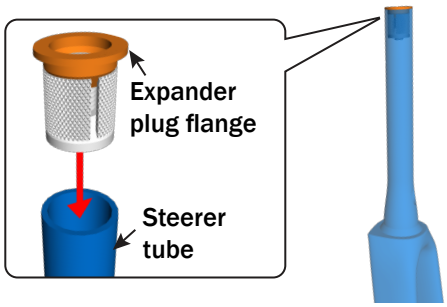

Below stem

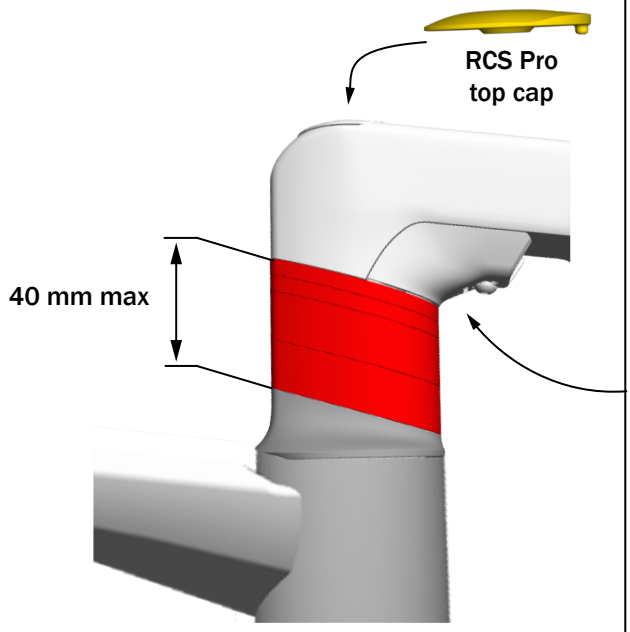

The expander plug flange must sit flush or slightly (0-2 mm) above the ridge inside the barstem.

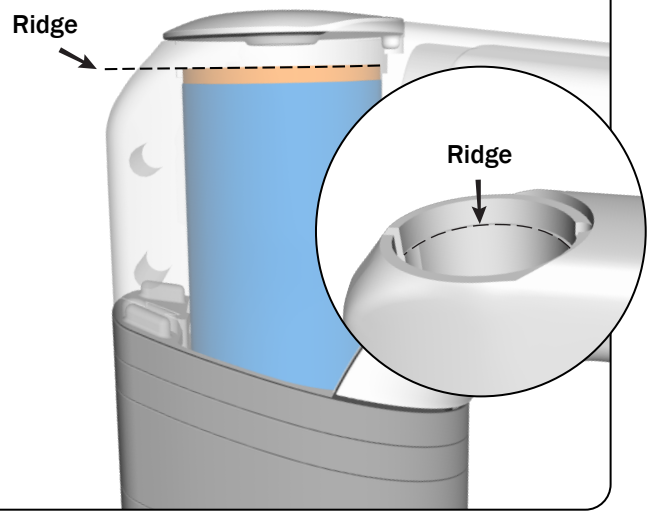

Above stem

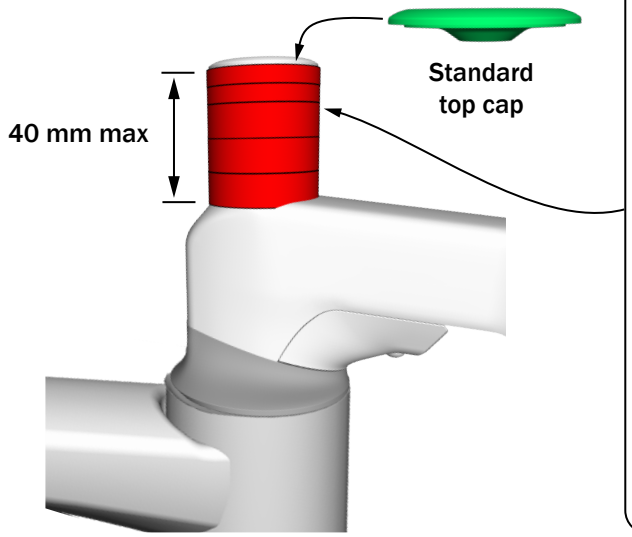

If there are any spacers above the stem, the expander plug flange must extend 3-4 mm into the top spacer.

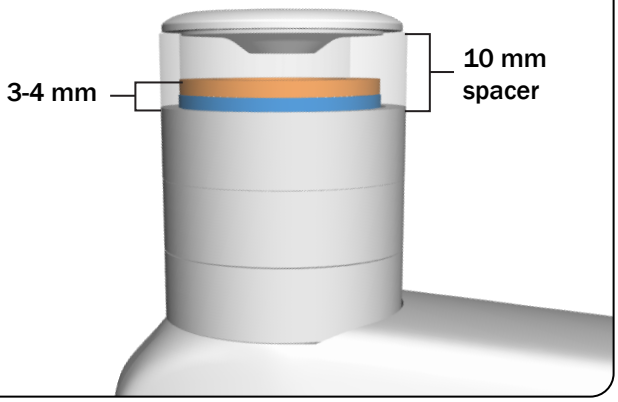

Install the RCS Pro

NOTE: The RCS Pro headset is only compatible with mechanical shifting.
Before you begin:

- Install derailleur(s) and brake calipers.
- Route all cables/hoses through the frame/fork and connect them to the derailleurs/calipers.
- Make sure the steerer tube is the correct length for the stack/spacer height (see RCS Pro spacers).

1.

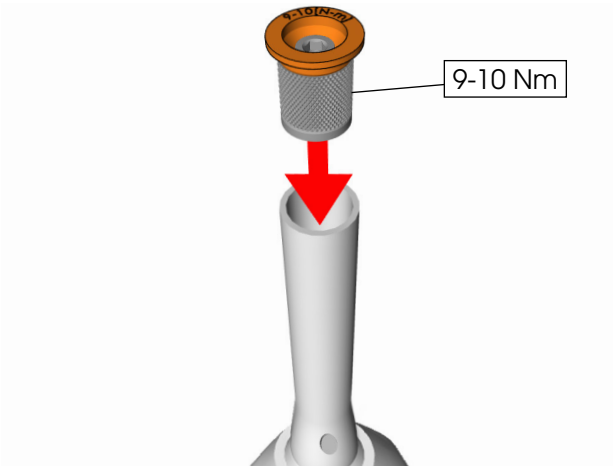

2.

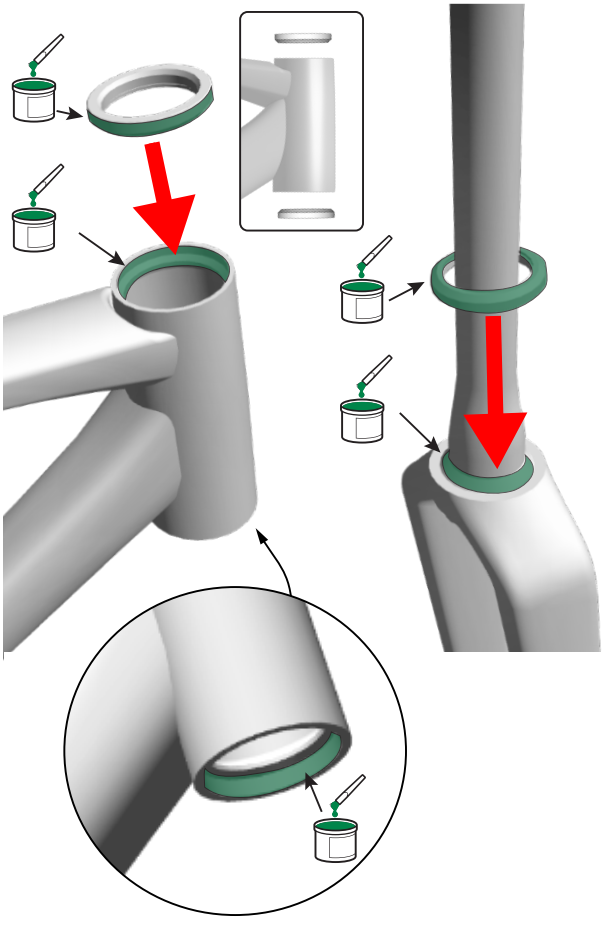

3.

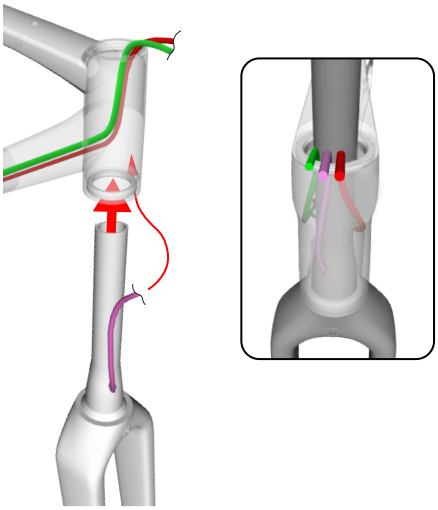

4. Refer to Install the display.

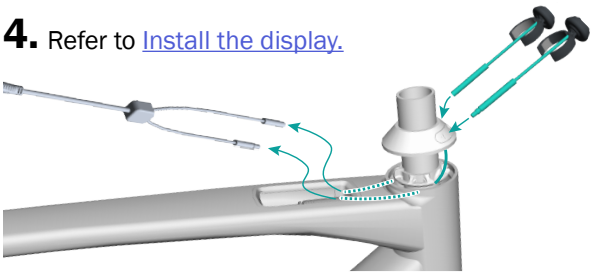

5.

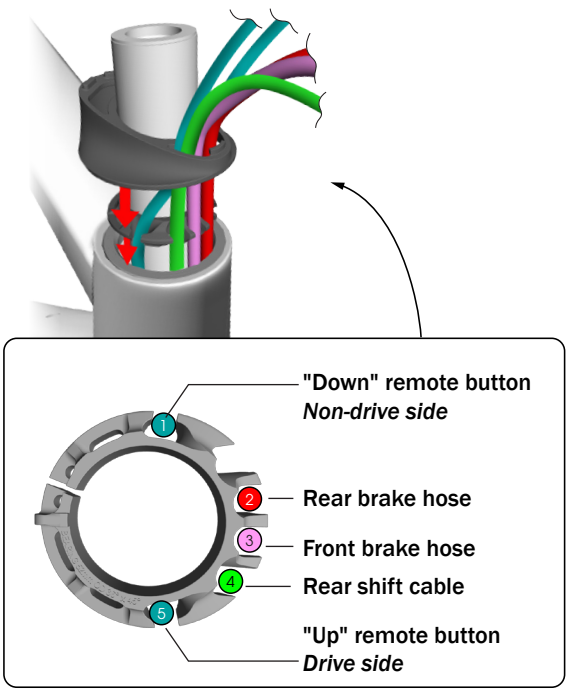

Install the RCS Pro (continued)

6. Slide the spacers down the steerer tube. Then feed about 40 mm of the rear brake hose and shift cable into the frame so the handlebar can turn freely.

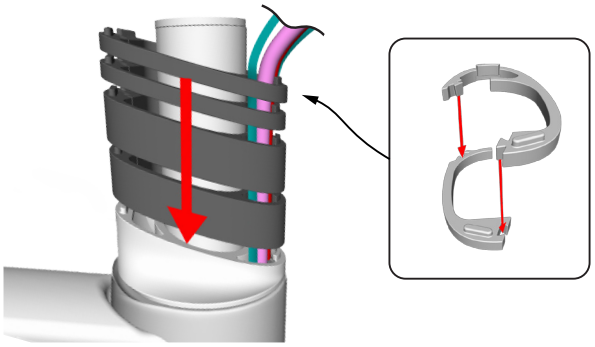

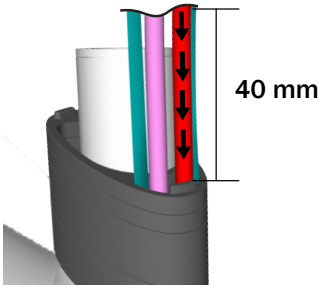

7.

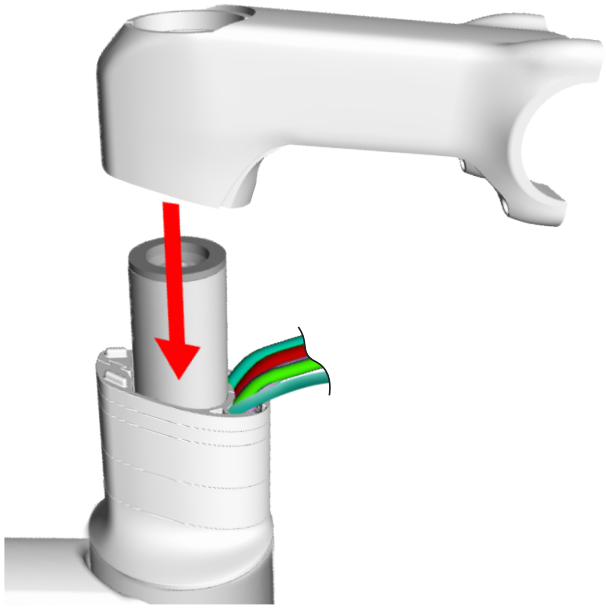

8.

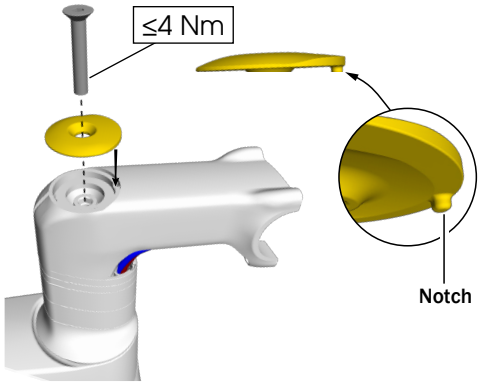

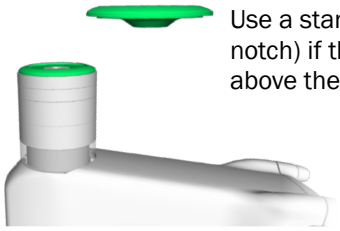

Use a standard top cap (no notch) if there are spacers above the stem.

9. Loosely tighten the faceplate fasteners to secure the handlebar.

OPTIONAL: Attach the Blendr base to the faceplate before attaching the handlebar.

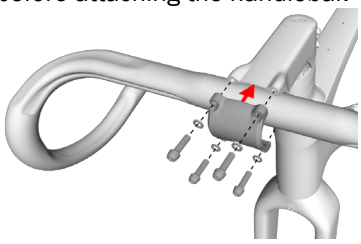

10. Fully tighten the top fasteners first — switching between them — until they are fully torqued. Repeat for the bottom two fasteners.

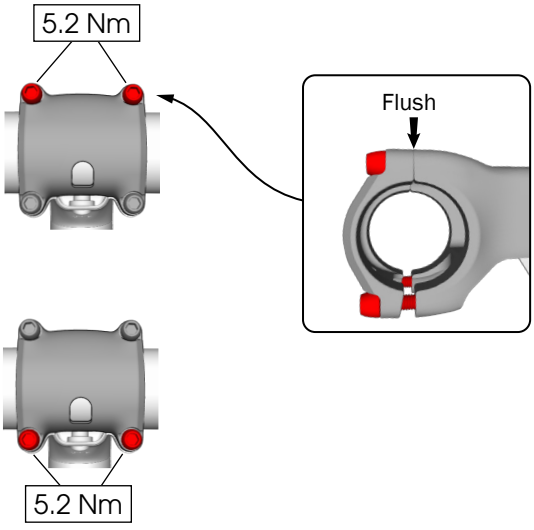

Install the RCS Pro (continued)

11. Tighten both stem fasteners — switching between them — until they are fully torqued.

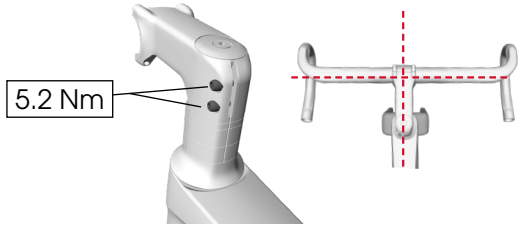

12. Insert the routing cover.

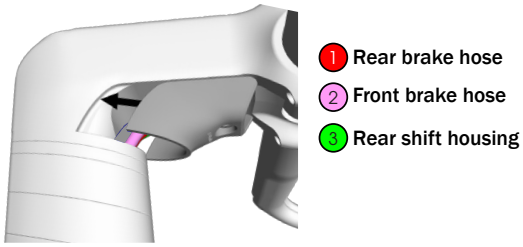

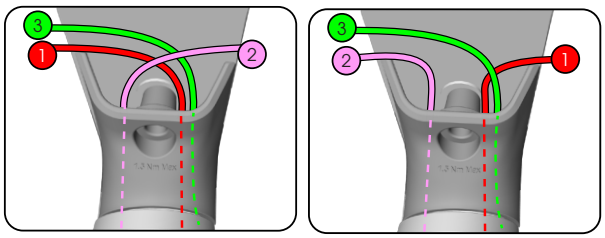

Standard **Moto**

13.

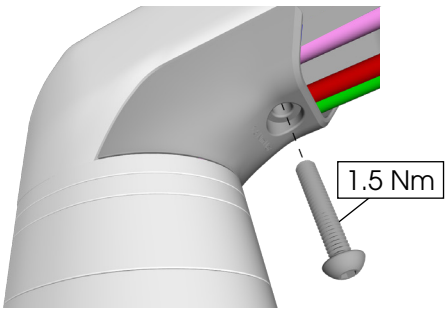

RCS Universal headset

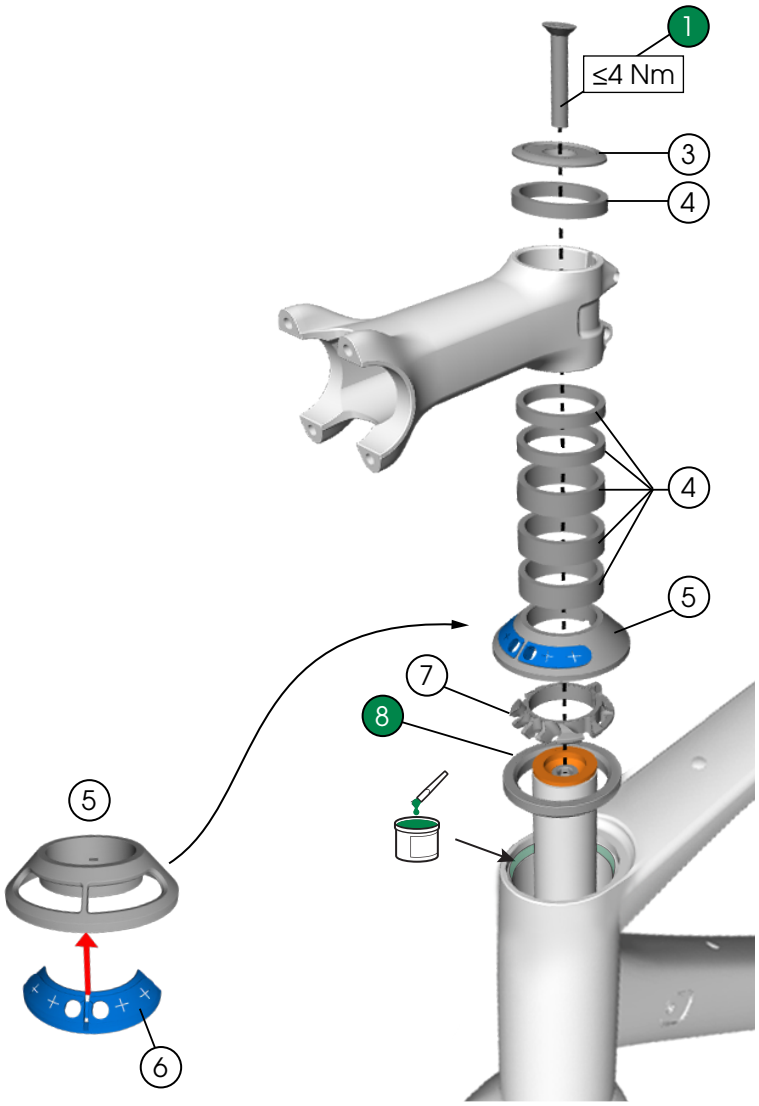

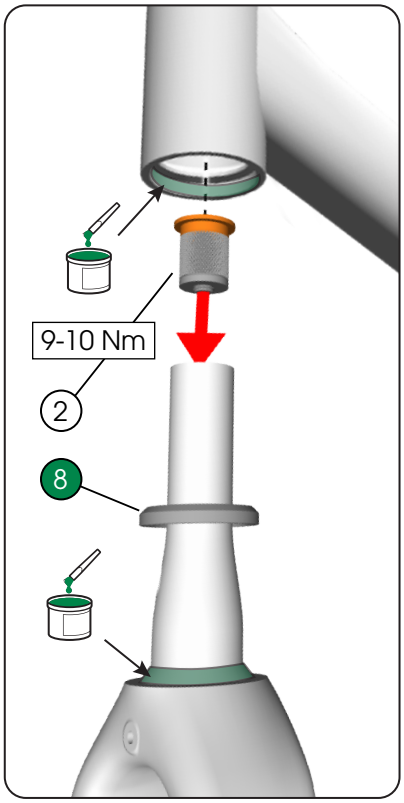

1 Fastener (M6 x 35 mm)



2 Expander plug

3 Top cap

4 Spacers (1-1/8" / 28.6 mm)

5 Bearing top cover

6 Grommet, bearing top cover

7 Split ring — *W5315339*

8 Bearings — *W5322818*

4 — *W547432*

4 — 5 mm — *5253930*
4 — 10 mm — *5253931*

5, 6 — *5328901*

RCS Universal spacers

NOTE: If you remove spacers below the stem, you must add the same height of spacers above the stem or cut the steerer tube.

WARNING

Do not exceed 40 mm of headset spacers above or below the stem. If there are more than the maximum height of spacers, the steerer tube could become damaged and break, causing a crash resulting in injury.

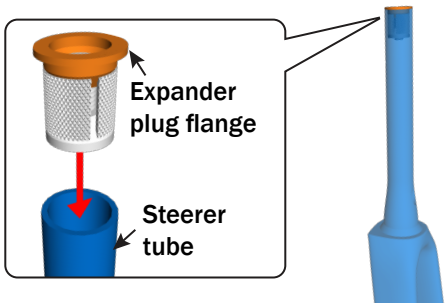

NOTE: Other stem types are compatible with this headset system. A spacer above the stem may not be required.

Below stem

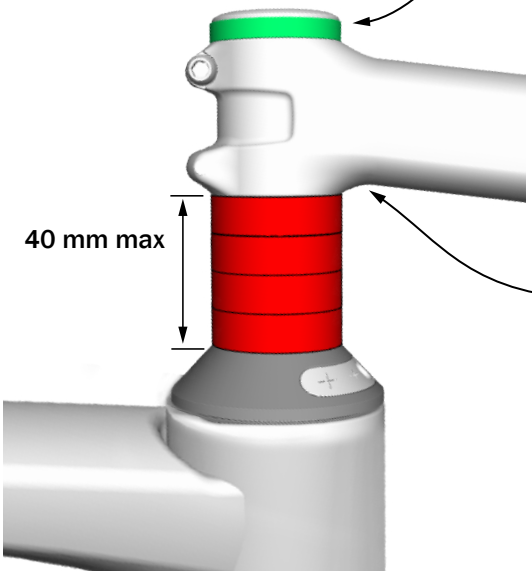

The steerer tube must sit flush or slightly below the top of the stem (0-2 mm).

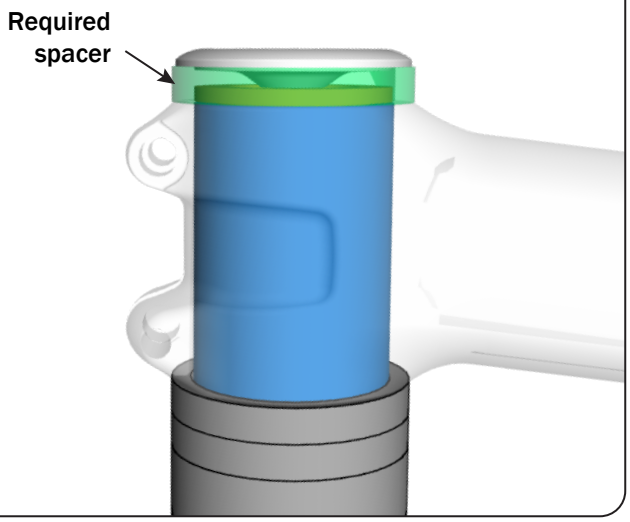

Above stem

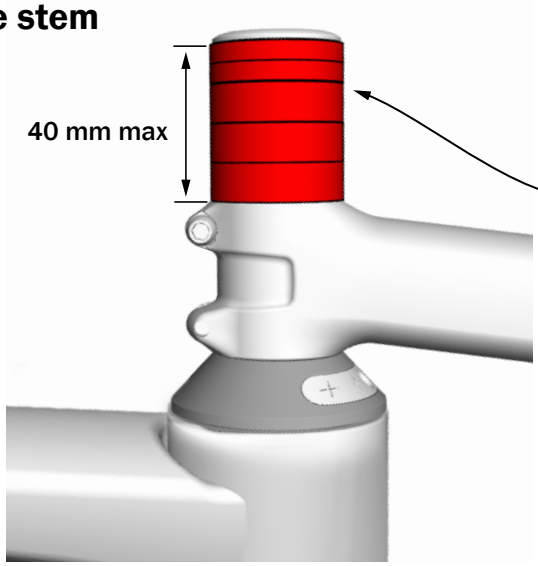

If there are any spacers above the stem, the expander nut flange must extend 3-4 mm into the top spacer.

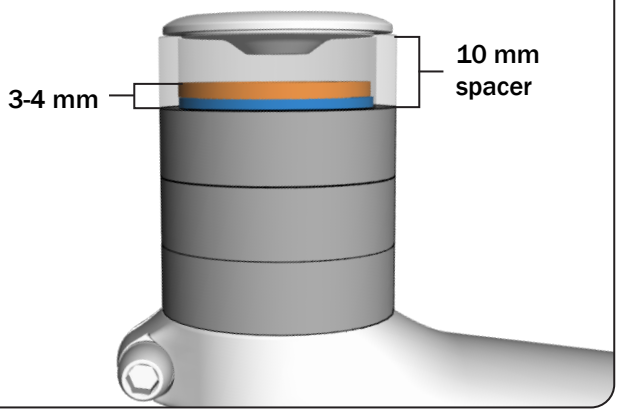

Install the RCS Universal

Before you begin:

- Install derailleur(s) and brake calipers.
- Route all cables/hoses through the frame/fork and connect them to the derailleurs/calipers (see Routing — mechanical or Brake Routing — AXS).
- Make sure the steerer tube is the correct length for the stack/spacer height (see RCS Universal spacers).

1.

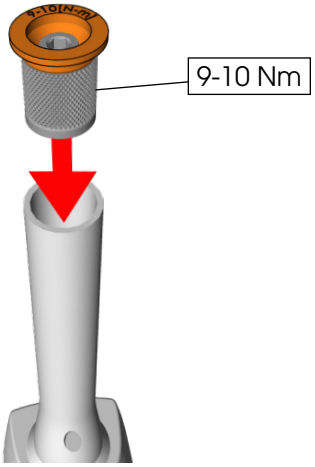

2.

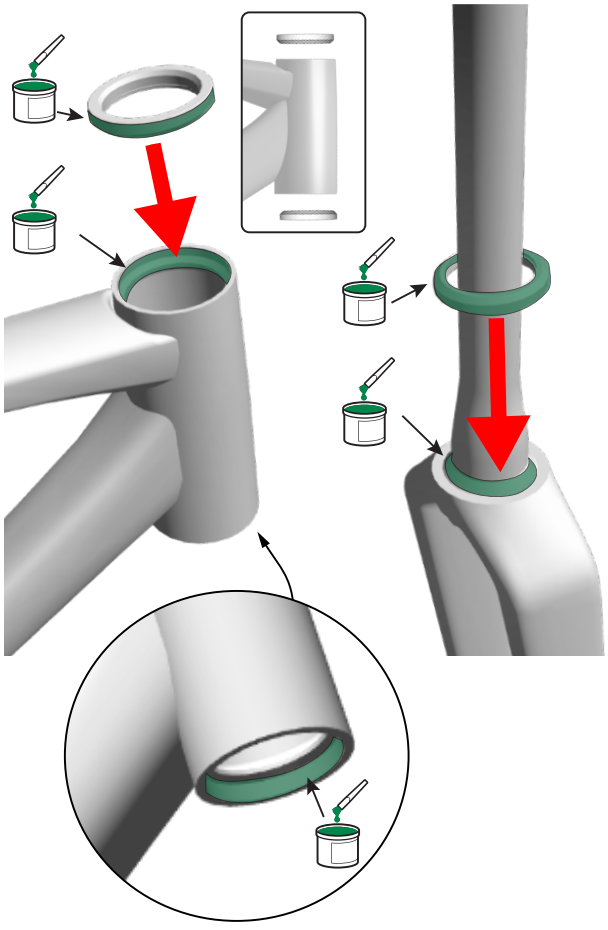

3.

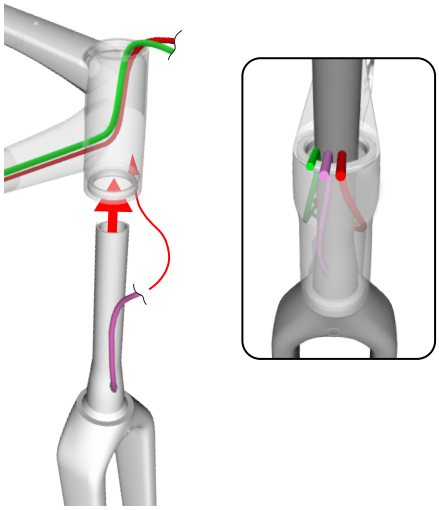

4. Refer to Install the display.

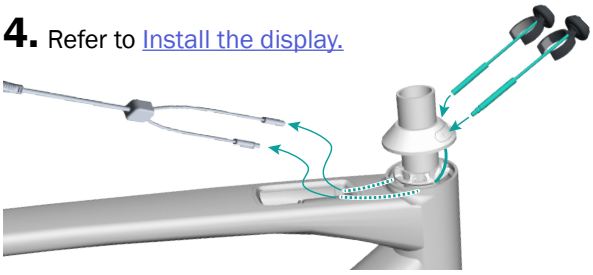

5.

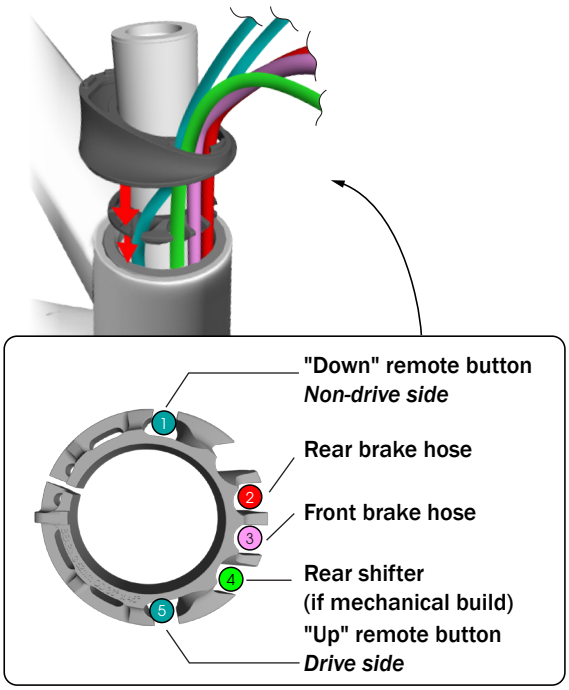

Install the RCS Universal (continued)

6. Route the brake hoses/cable housings through the bearing top cover. Then slide the bearing top cover down the steerer tube.

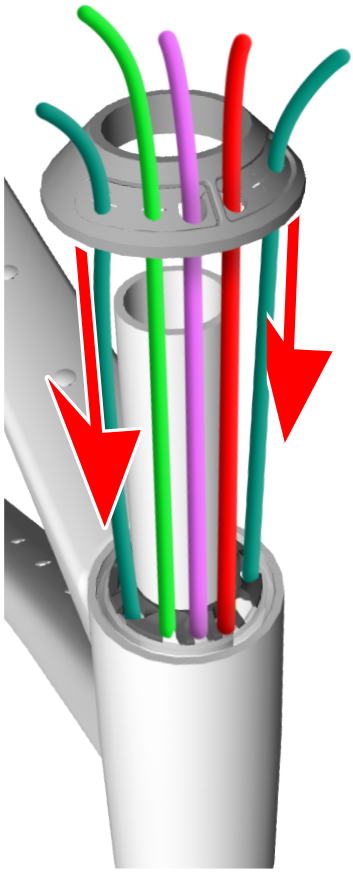

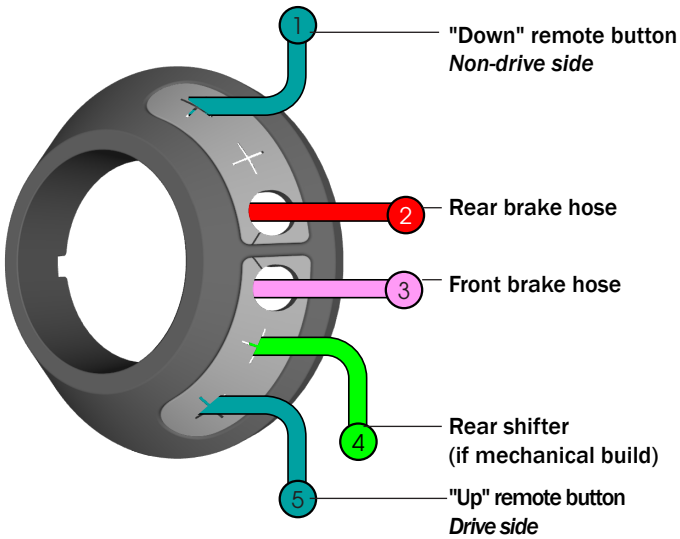

7. Slide the spacers and stem down the steerer tube.

NOTICE: Make sure at least one spacer is above the stem (unless the stem has an integrated spacer).

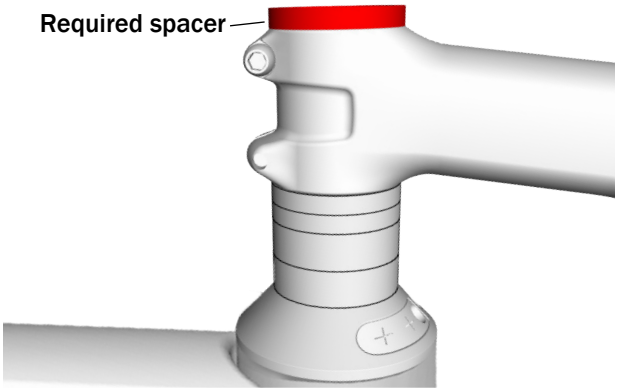

8.

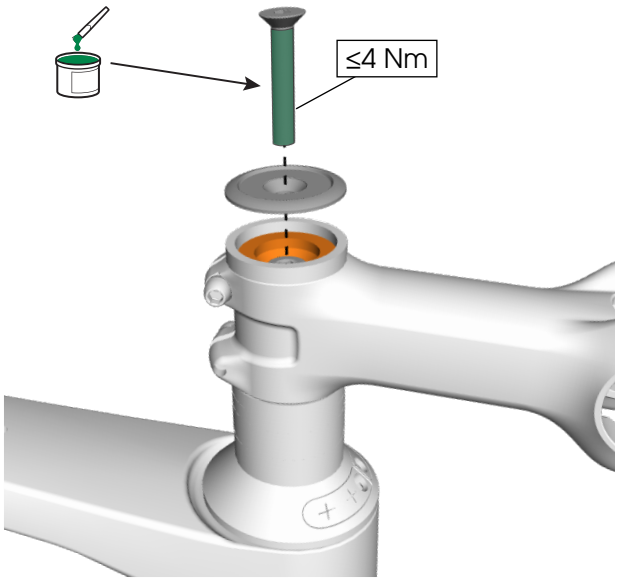

Lockring and cranks

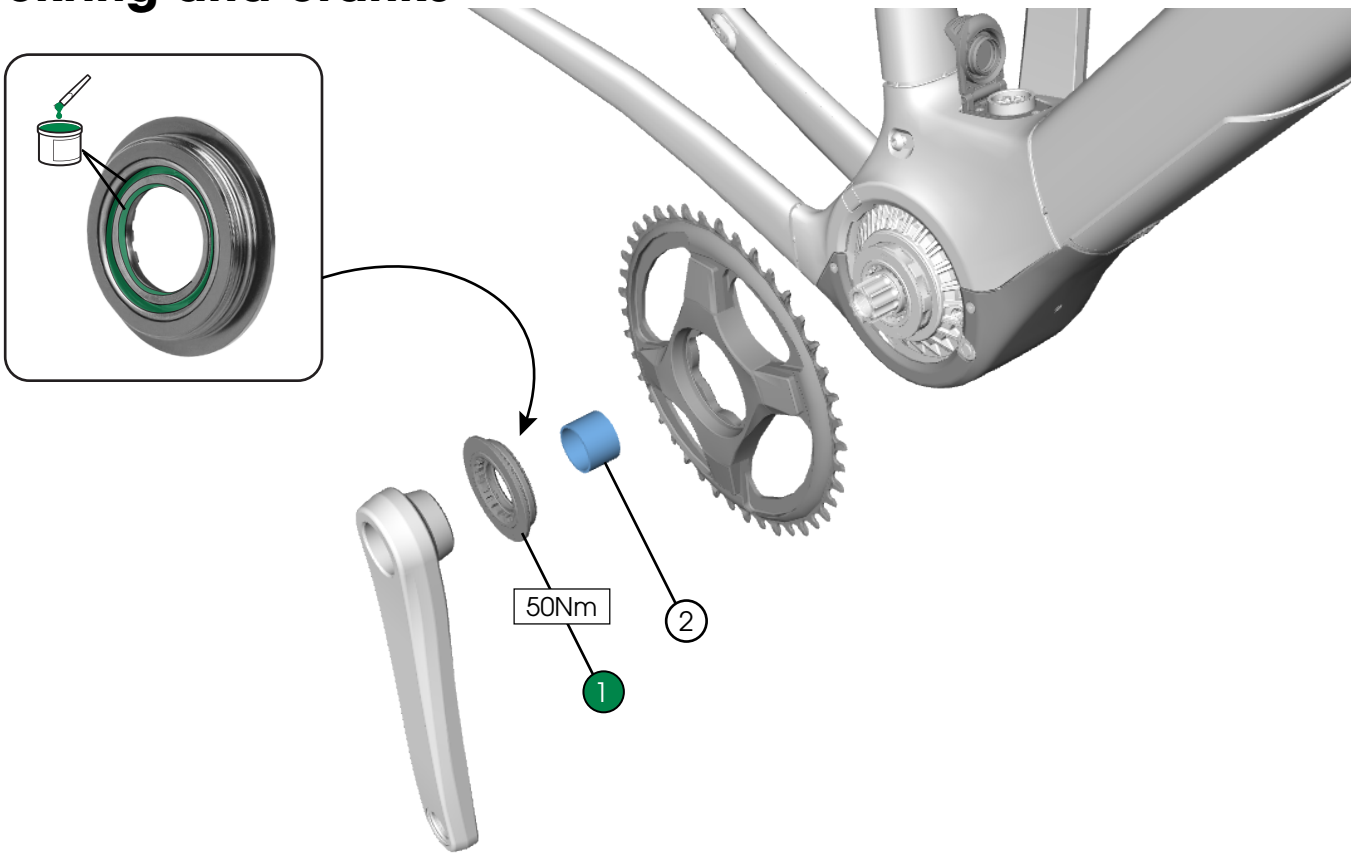

1 Lockring — BB20 — *5289572*

2 *Lockring sleeve — *5289572*

3 Spacer (2x chainrings only) — *W5309530*

**Used for lockring installation only*

Lockring sleeve

Use the lockring sleeve to install the lockring. Remove it after assembly.

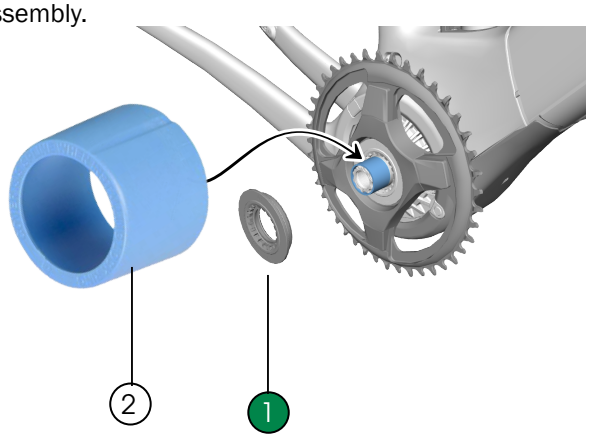

Additional spacer

This spacer may be required for proper adjustment of a front derailleur.

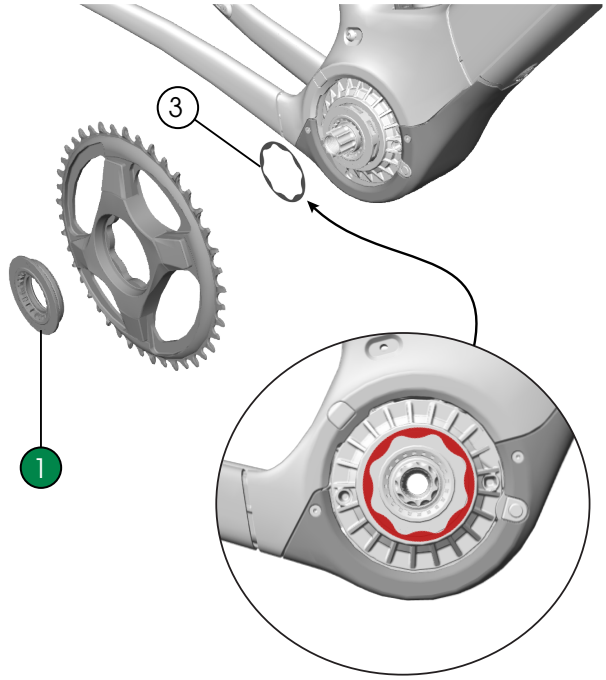

Install the lockring and crank

1. Install the non-driveside crank. Align the indents on the bottom bracket spindle with the crank orientation (like the hands on a clock).
IMPORTANT: If you do not align the cranks as shown, the drive unit will not run properly.

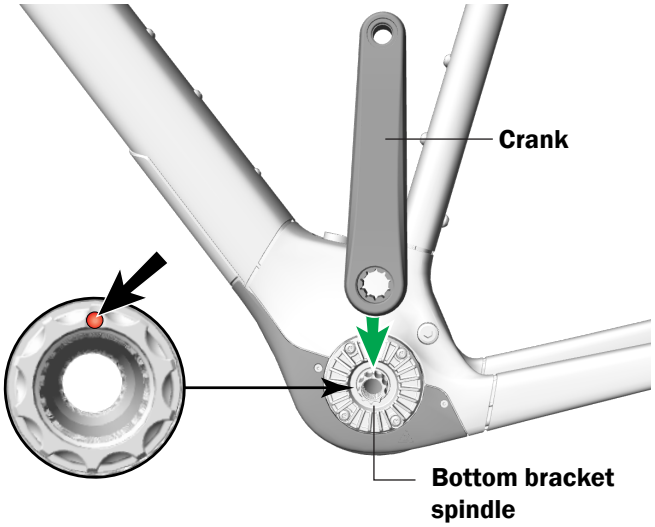

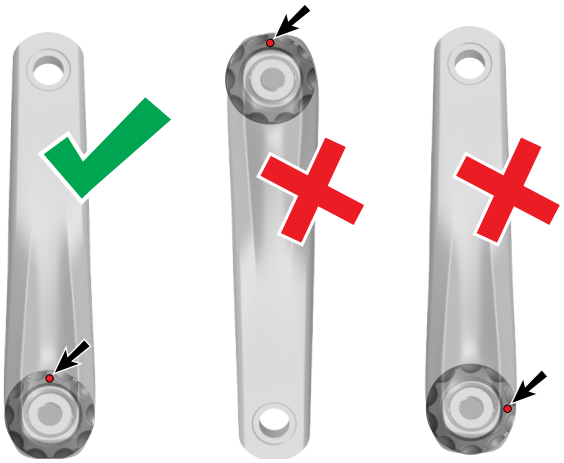

2.

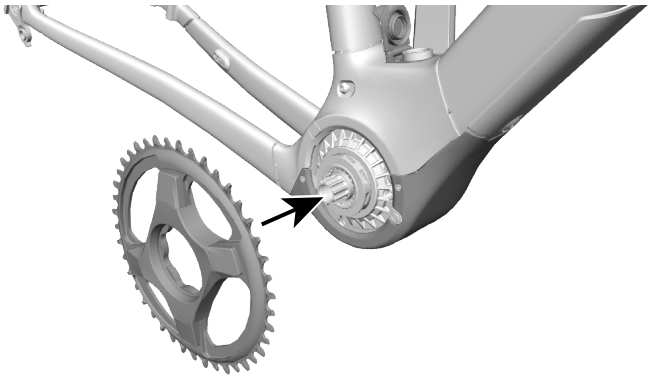

3.

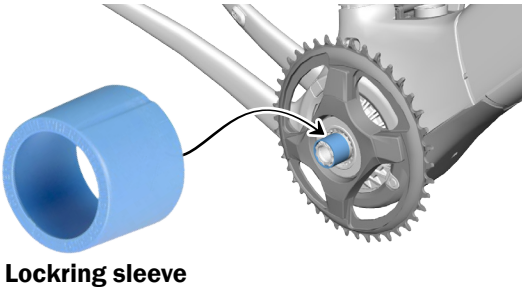

NOTICE: Failure to use the protective sleeve could damage the seal on the lockring and allow water to damage the drive unit.

4.

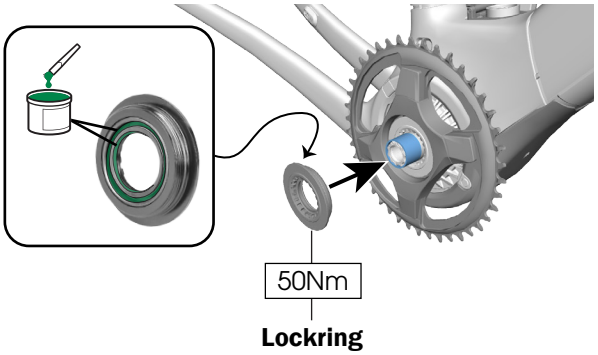

5. Install the driveside crank.

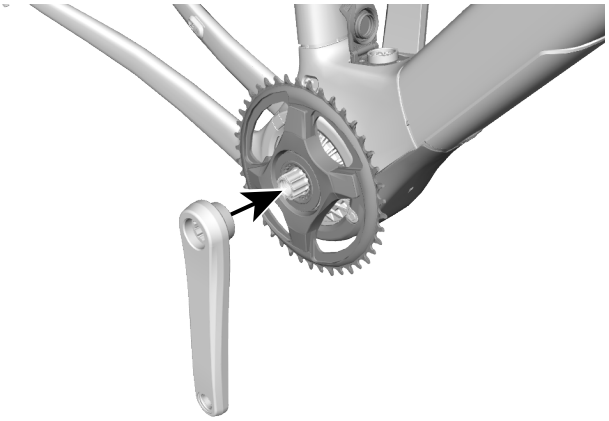

Universal derailleur hanger (UDH) and axles

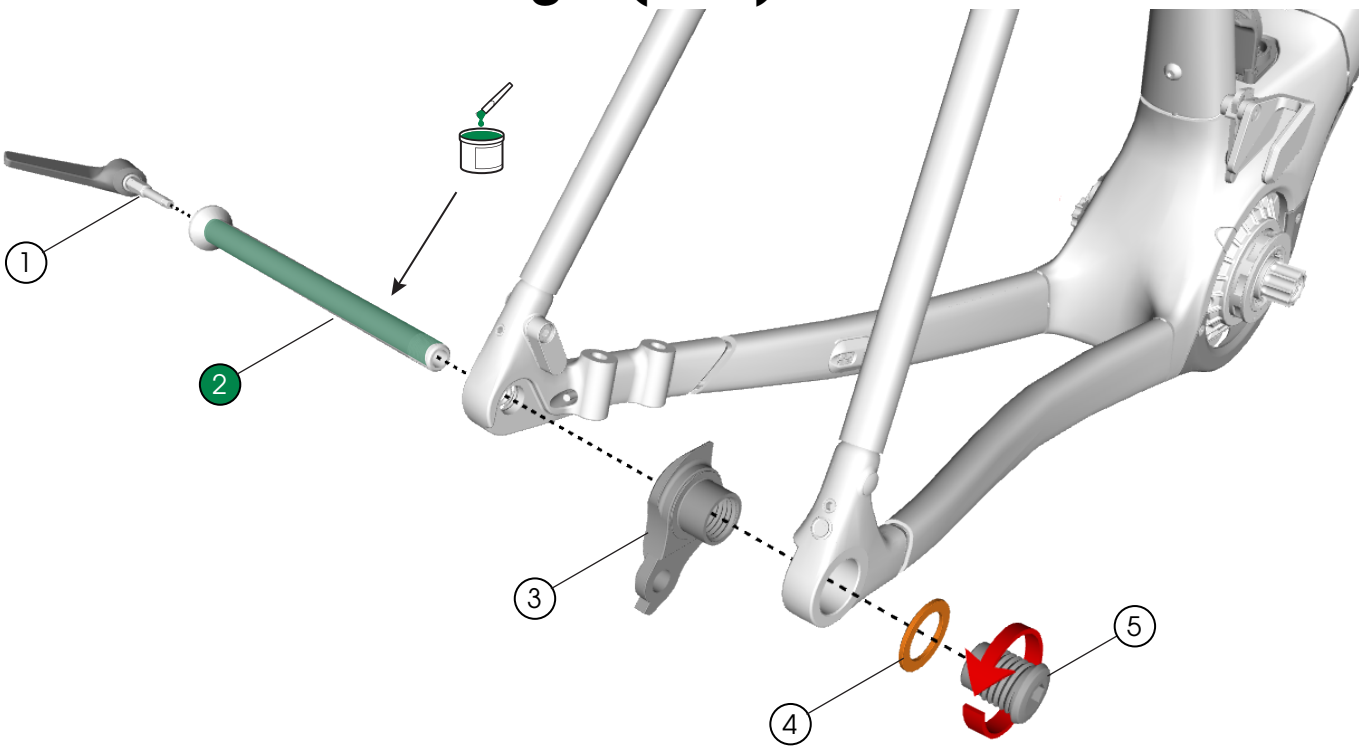

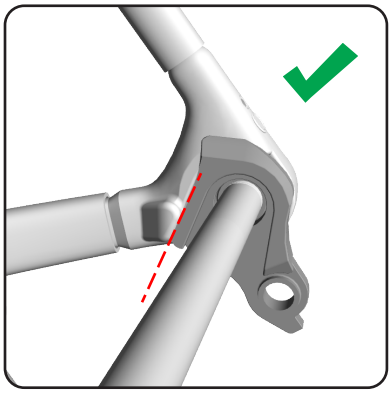

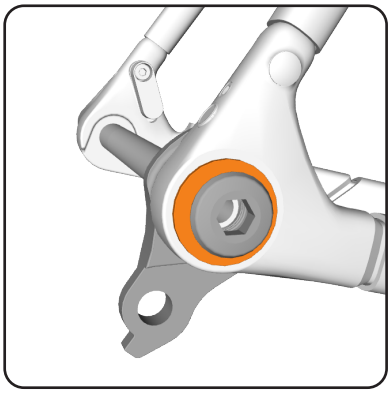

1. Switch lever (black) — **W5312899*
2. Rear axle (M12 x 166 mm) — *W5312169*
3. Derailleur hanger
4. Washer
5. Fastener (M12 x 16 mm)

W5271424

6. Front axle — *W5312168*

**color-matched part — see Trekbikes.com for full list*

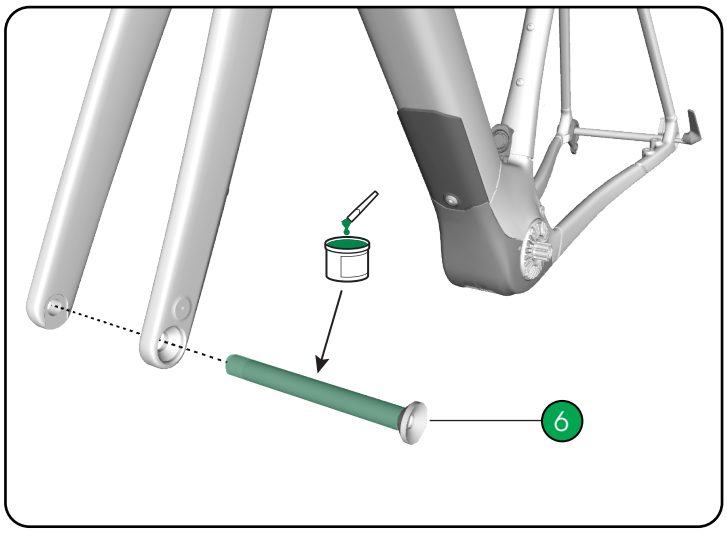

Chainkeeper

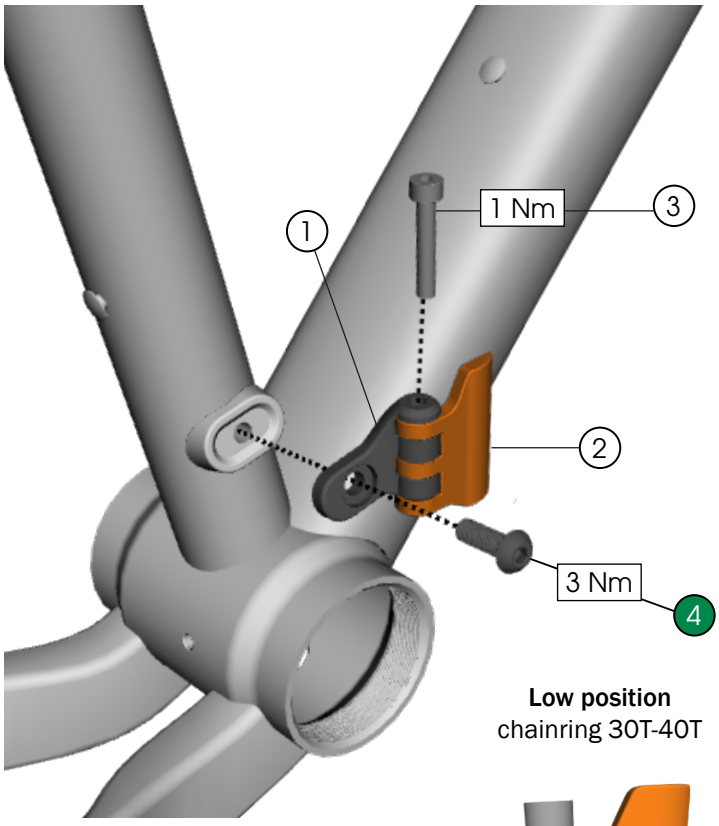

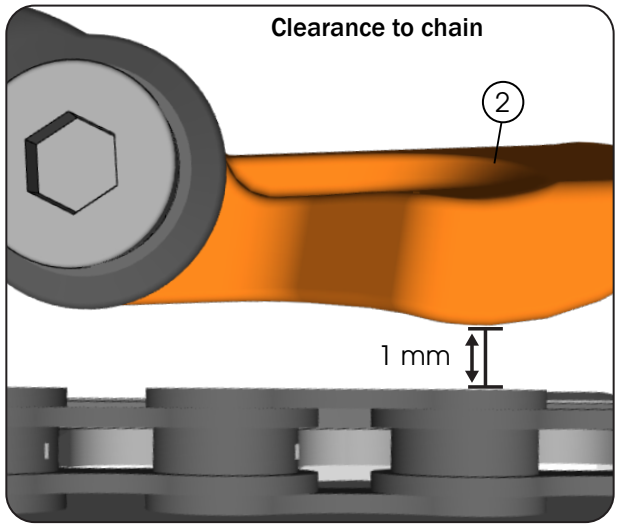

Low position
chainring 30T-40T



High position
chainring 34T-44T



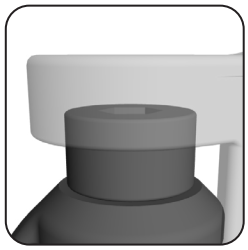

1. Base
2. Tab
3. Fastener (M4 x 22 mm) — *5320962*
4. Fastener (M5 x 16 mm) — *5328801*

5. Chainkeeper
for Australia and New Zealand — *W5331540*

6. Fastener (M5 x 16 mm)

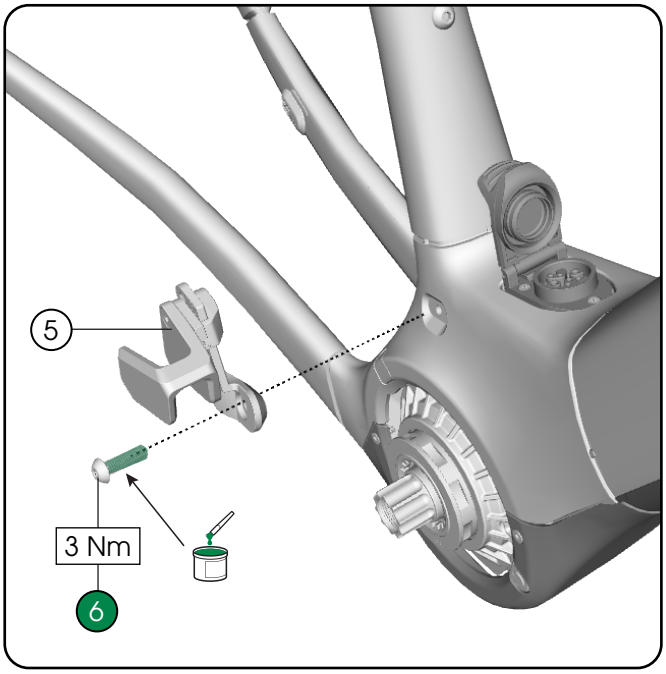

Brake mount adapters

WARNING

Risk of injury or death due to incorrect brake mounting

Correctly orient the brake mount adapter so that the brake pads align fully with rotor. Improper installation of brake mount adapter can result in brake failure, loss of control, and injury or death.

Front	160 mm rotor	180 mm rotor

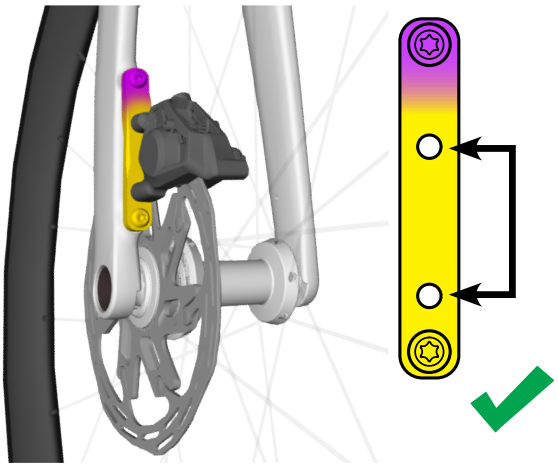

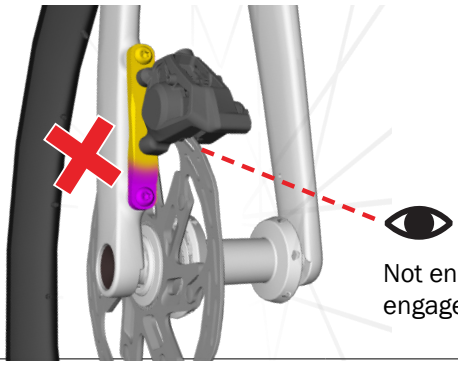

Not enough brake pad engagement

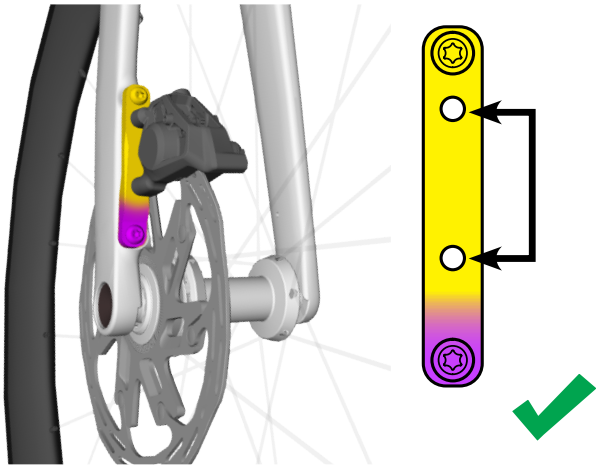

Rear	140 mm rotor	160 mm rotor

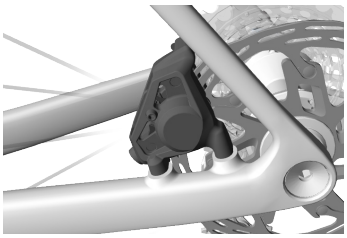

Do not use rear brake mount adapter.

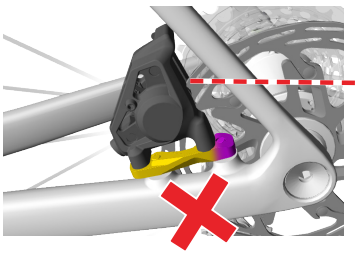

Not enough brake pad engagement

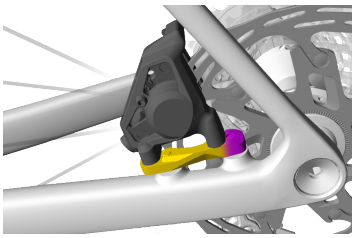

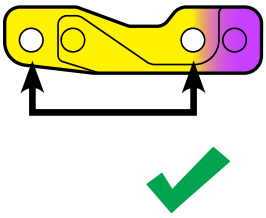

Fender mount



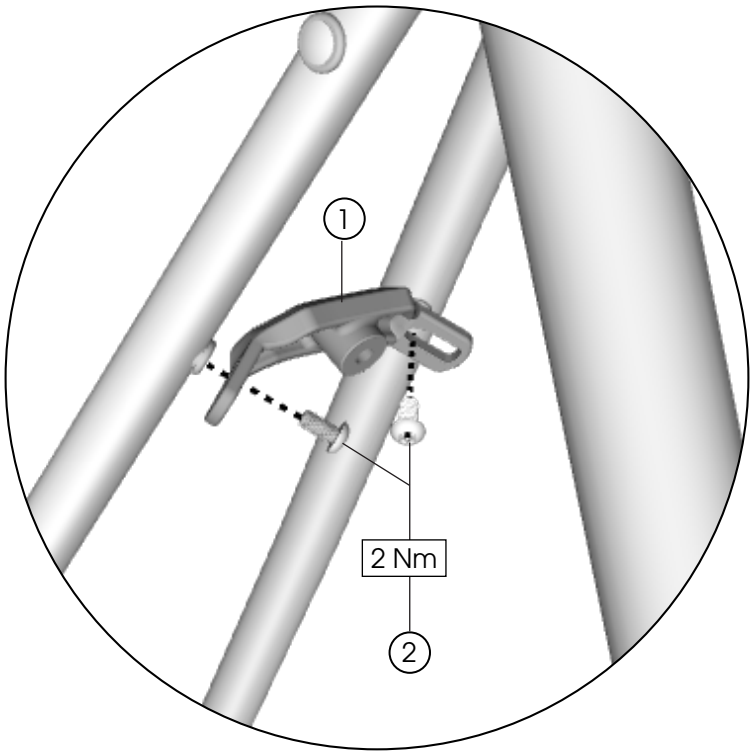

1. Fender mount bridge — W602256
2. Fasteners (M4 x 8 mm) — *5342162*

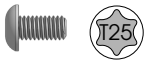

Frame mounts and down tube guard

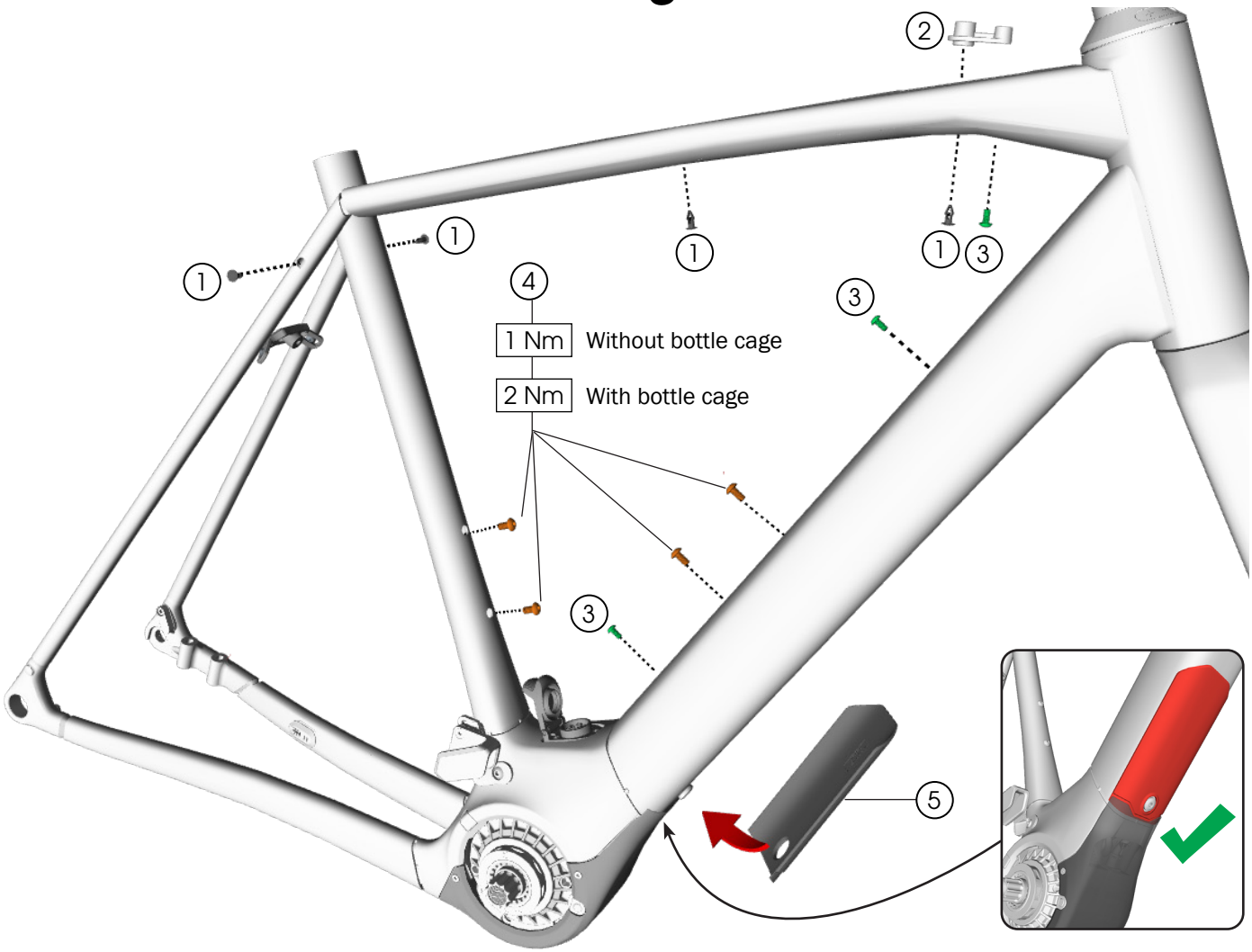

1. Press-in plugs
2. Top tube bag mount — *W5328277**
3. Fasteners (M4 x 8 mm) — *5342162* 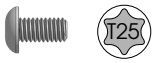

4. Fasteners (M5 x 10 mm) — *5332051* 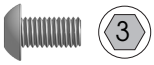

5. Down tube guard — *W5329501*

Install new down tube guard

1. Clean the mating surface on the frame with 50/50 isopropyl alcohol mix.
2. Remove the adhesive backing and attach guard to the surface. Align the hole of the guard to the bolt hole on the frame. Ensure the lower end of the guard is covered by the upper end of the motor cover.

2 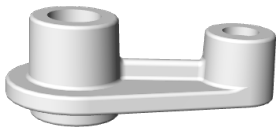

**Top tube bag mount is not compatible with XS frame.*

Reinstall the down tube guard

1. Clean the mating surface on the frame with 50/50 isopropyl alcohol mix.
2. Attach the guard with a two-part epoxy. Align the hole of the guard to the bolt hole on the frame. Ensure the lower end of the guard is covered by the upper end of the motor cover.

   TIP: Wrap masking tape around the guard and the frame to hold it in place while the epoxy cures.
3. Allow the epoxy to cure for 24 hours (or according to manufacturer's specifications).

Bottles and bag

NOTE: Triangle bags and bottles are sold aftermarket.

The charts below show the largest bottles you can fit on each frame size with the bag installed.

XS

NOTE: Triangle bag is not compatible on XS frame.

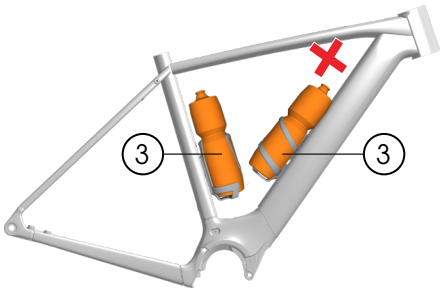

S

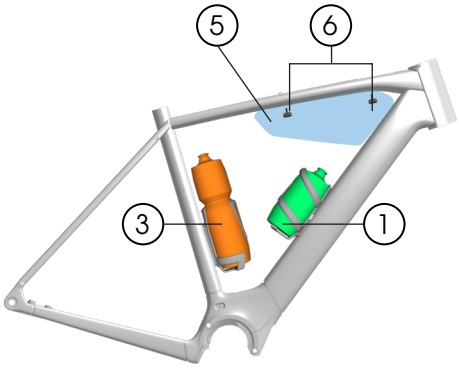

M

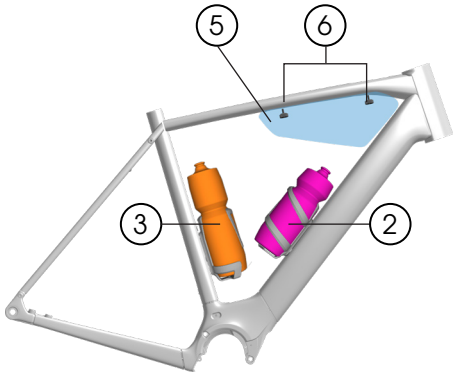

M-L or L

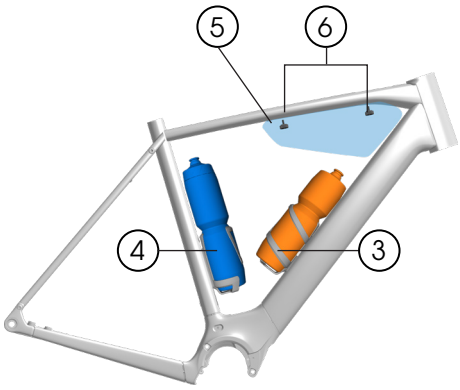

XL

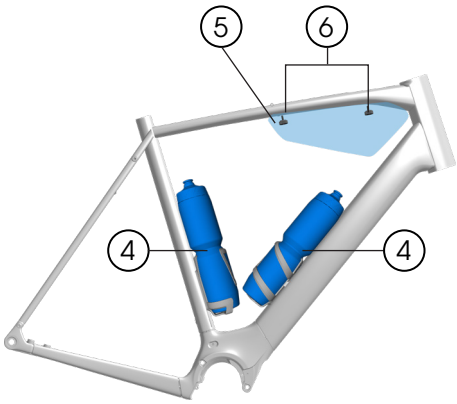

1. 15 oz (444 ml) bottle
2. 21 oz (621 ml) bottle
3. 26 oz (769 ml) bottle
4. 34 oz (1006 ml) bottle
5. Triangle bag, XS/S (1 L) — *5323152*
6. Thumb screws — *5324792*

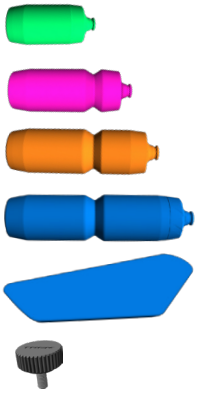

Specifications

Frame

		Domane+ ALR
Rear hub OLD		142 mm
Front hub OLD		100 mm
Upper fork steerer tube OD		28.6 mm
Lower fork steerer tube OD		38.8 mm
Brake rotor diameter min/max	**Front**	160/180 mm
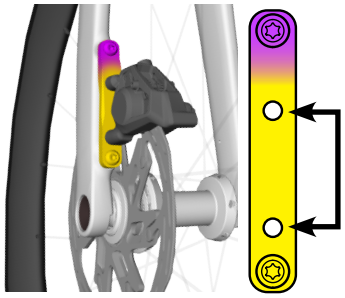 **160 mm** 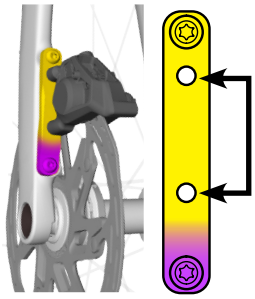 **180 mm**		
Brake rotor diameter min/max	**Rear**	140/160 mm
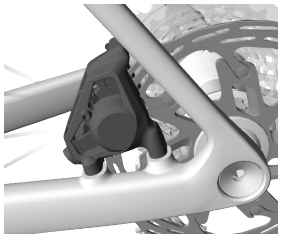 **No brake mount adapter** **140 mm** 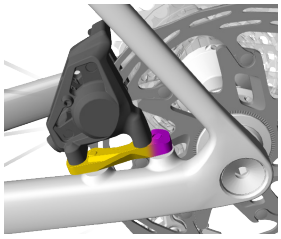 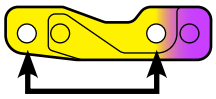 **160 mm**		
Tire width max 700c	**With fenders**	35c on 25 rim
	Without fenders	40c knobby (width as measured)
Fender compatible	**Front**	Yes
	Rear	Yes

Chainline/chainring

Chainline	Min chainring teeth (T)	Max chainring teeth (T)
	Single (1x)	
49 mm	34T	46T