

2023 DOMANE+ AL

SERVICE MANUAL

Contents

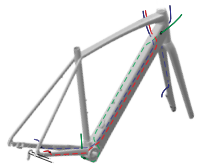

Brake/shift routing

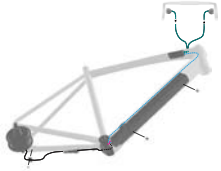

E-system

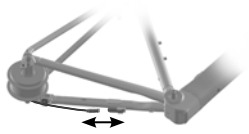

Remove the rear wheel



Remove the bottom bracket/ torque sensor

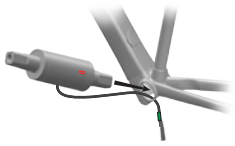

Install the bottom bracket/ torque sensor



Remove the battery

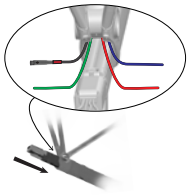

Install the battery



Fork and headset



Chainkeeper

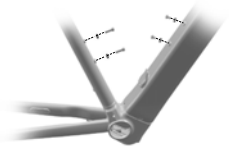

Frame mounts



Specifications

Safety

WARNING

Properly tighten hardware

Always tighten hardware to the specified torque. Over-tightening hardware could deform or break the hardware or components. Under-tightening hardware could cause hardware or components to become loose. Either situation could damage the bicycle and result in injury to the rider.

WARNING

Reapply threadlocker

All reused-fasteners with pre-applied threadlocker must be cleaned with isopropyl alcohol and have new thread-locker applied before re-assembly. If threadlocker is not applied, the fasteners may loosen which could damage the bicycle and result in injury to the rider.

Legend



Apply appropriate grease

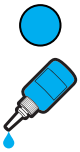

Apply threadlocker

Nm Torque

★ Cable (zip) tie

Additional info

Additional manuals are available at Trekbikes.com/manuals.

- Owner's Manual — comprehensive instructions that come with your bicycle
- Hyena E-bike Owner's Manual — detailed instructions on the e-system found under Electric bikes > 2023

Copyright 2022 Trek Bicycle Corporation All Rights Reserved

Brake/shift routing

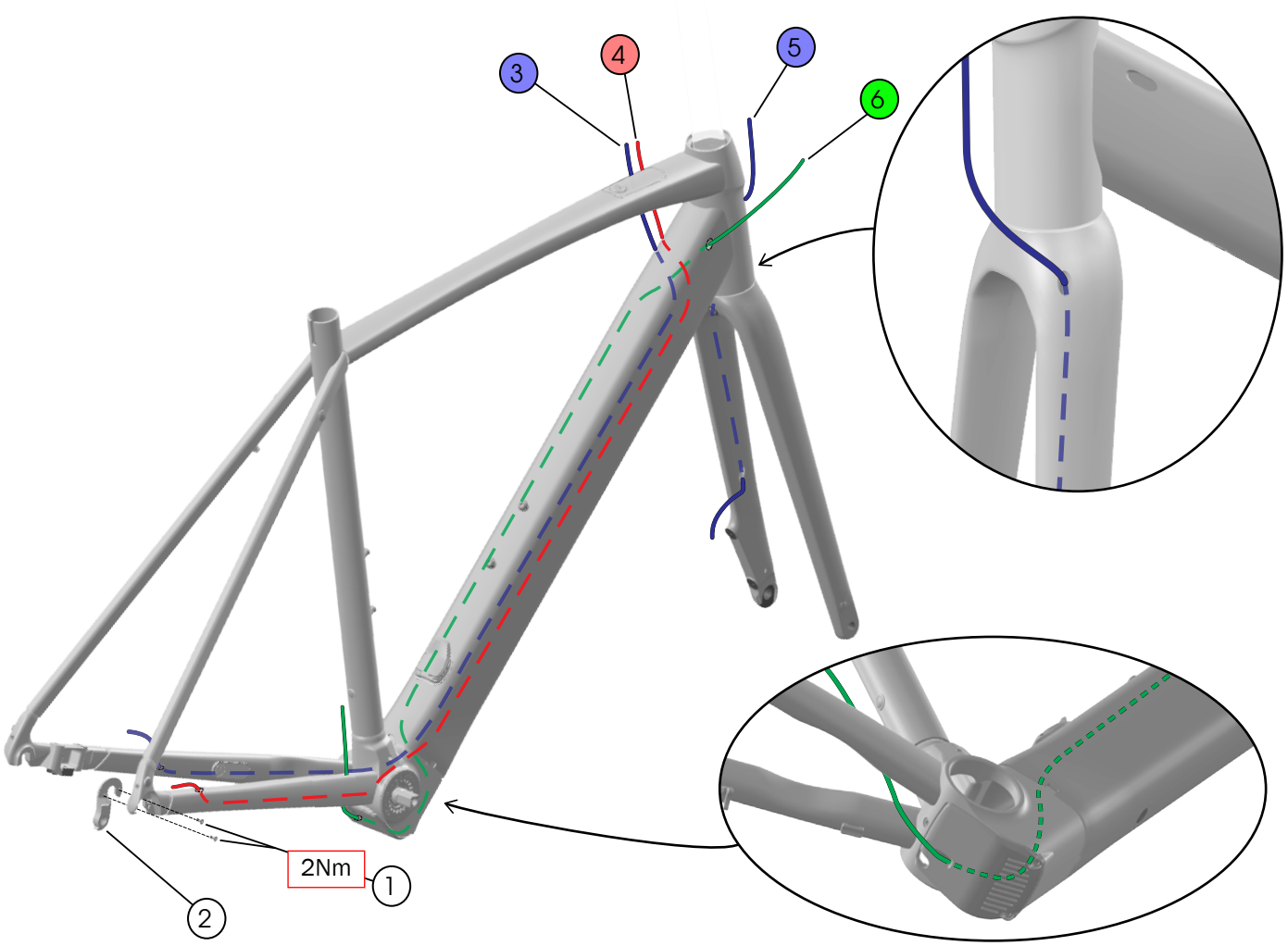

1. Derailleur hanger bolts (M3x6.4mm) — *W318604*
2. Derailleur hanger — *W5268484*
3. Rear brake hose
4. Rear derailleur cable
5. Front brake hose
6. Front derailleur cable

E-system

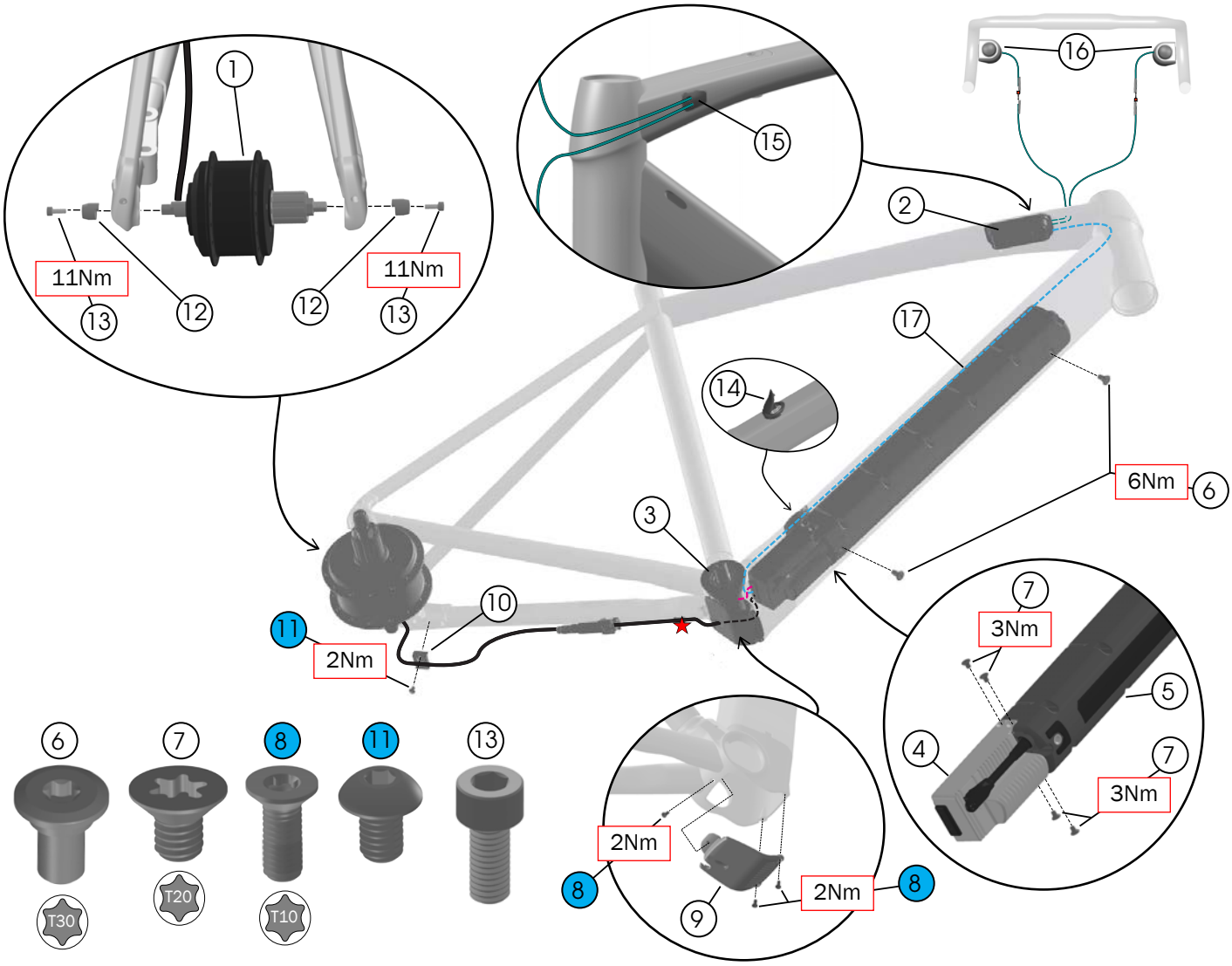

1. Hub motor — W5266205
2. Remote — W5257327
3. Torque sensor — W5271067
4. Controller — W5252986
5. Battery — W5255878
6. Bolts, T30 (M6x8mm) — W5258222
7. Bolts, T10 (M4x6mm) — 5269023
8. Bolts, T10 (M3x8mm) — W285213
9. Bottom bracket cover — W5263932
10. Cable guide
11. Cable guide bolt (M4x6mm)

   — 5284388
12. Anti-rotational flange nuts
13. Axle bolts

   — 5288641
14. Charge port cover — W5263927
15. Wire grommet — W5268283
16. Handlebar remotes — W5264978
17. Remote cable — W5274443

Remove the rear wheel

1. Shift to the smallest rear cog (highest gear) and front, inner chainring.
2. Unplug the motor cable at the chainstay and remove the cable from the cable guide (10).

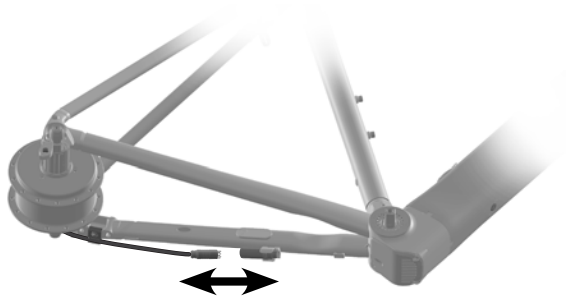

3. Remove both axle bolts (13) and flange nuts (12).

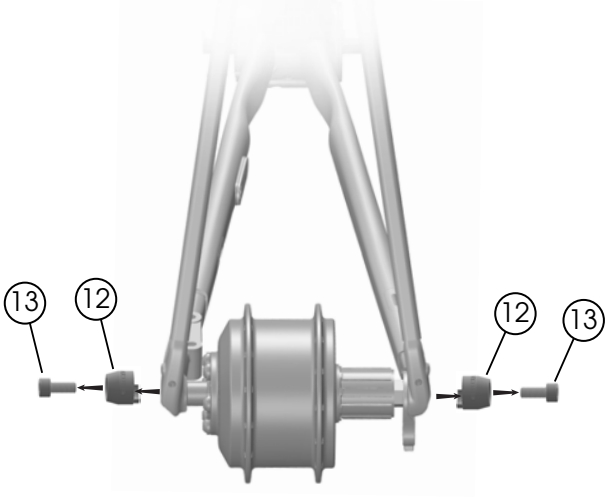

Remove the bottom bracket/torque sensor

AUTHORIZED DEALERS ONLY: Only authorized dealers should perform service on the e-system. Improper handling, tools used, or torque applied to these parts may result in damage to the e-system components and cables.

1. Remove the three bolts from the bottom bracket cover (9).

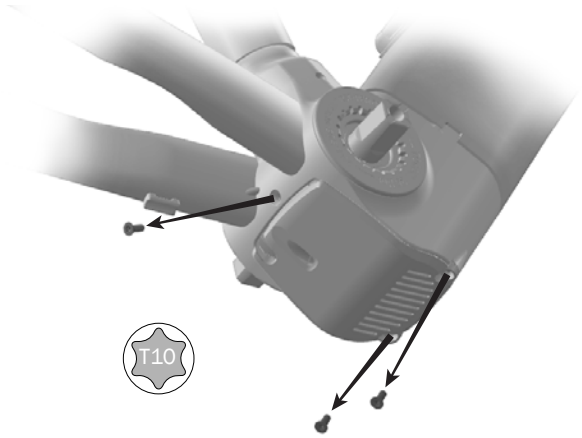

2. Remove the bottom bracket cover (9) and slide it up the front derailleur housing.

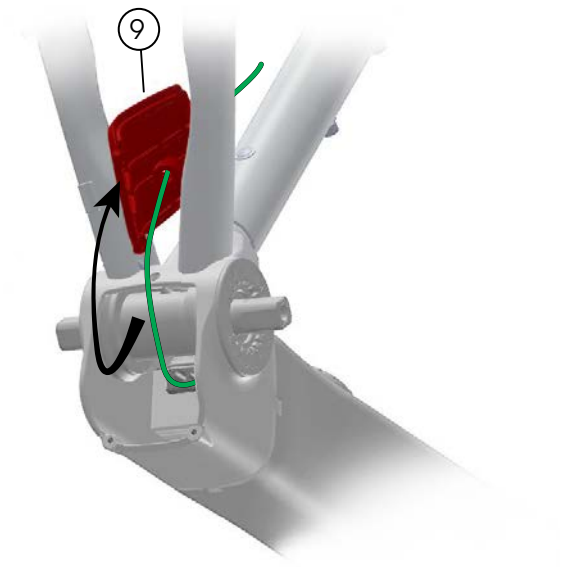

3. Unplug the torque sensor cable.

   NOTICE: Do not pull the cables apart by the wires — this can damage them.

   NOTICE: If you do not disconnect the plug, you may damage the torque sensor cable when you try removing the bottom bracket cup.

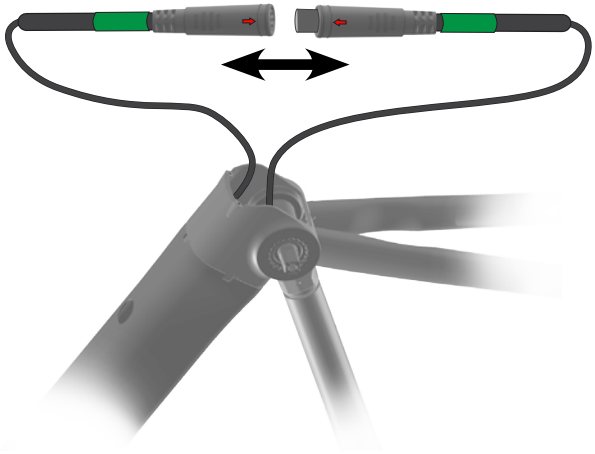

4. Remove the non-driveside cup.



5. Pull out the torque sensor/bottom bracket.
6. Remove the driveside bottom bracket cup.

Install the bottom bracket/torque sensor

AUTHORIZED DEALERS ONLY: Only authorized dealers should perform service on the e-system. Improper handling, tools used, or torque applied to these parts may result in damage to the e-system components and cables.

1. Install the driveside cup and tighten it to 35Nm.

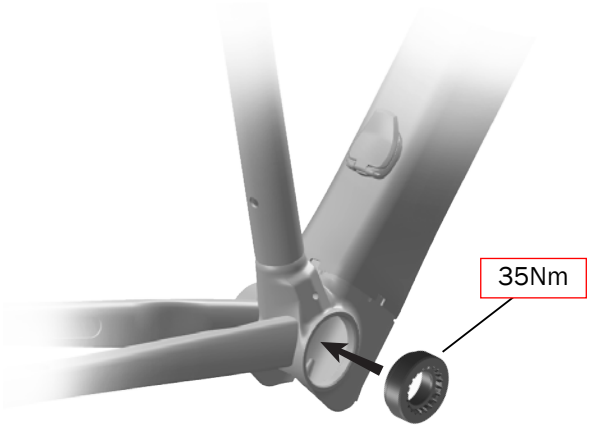

2. Insert the torque sensor and cable — notched side first — into the non-drive side of the frame.

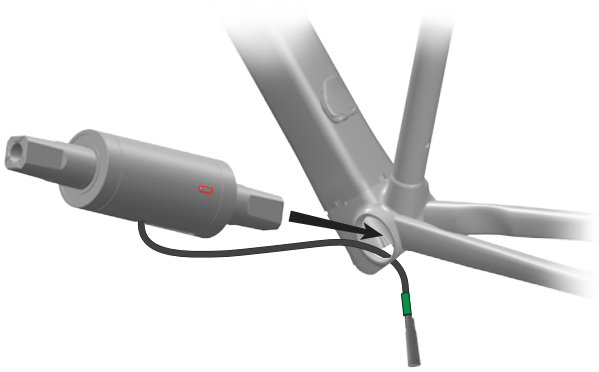

3. Reconnect the bottom bracket/torque sensor cable.

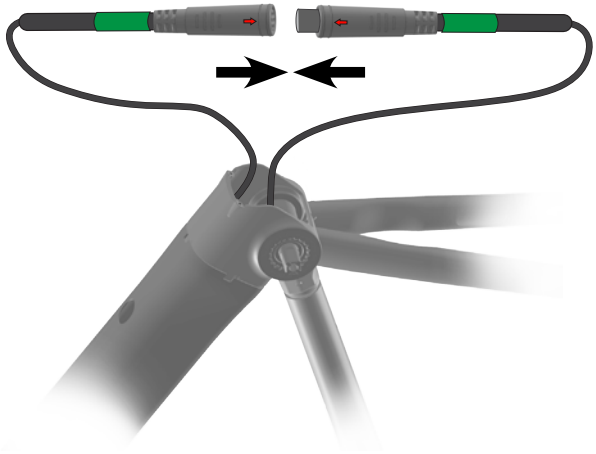

4. Fit all cables into the bottom bracket shell and install the cover. Tighten the bolts (8) to 2Nm.

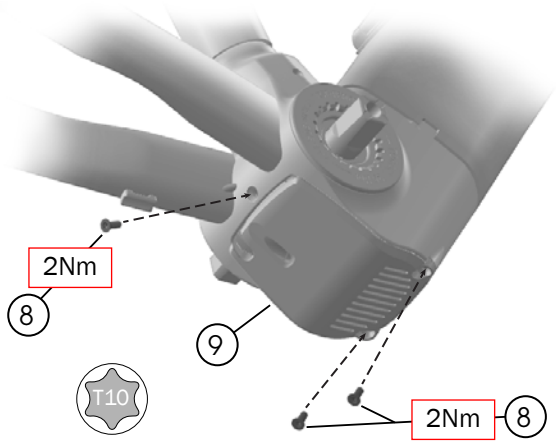

Remove the battery

AUTHORIZED DEALERS ONLY: Only authorized dealers should perform service on the e-system. Improper handling, tools used, or torque applied to these parts may result in damage to the e-system components and cables.

1. Remove the bottom bracket/torque sensor (see page 5).
2. Cut the zip tie holding the motor cable to the frame. Unplug the motor cable.

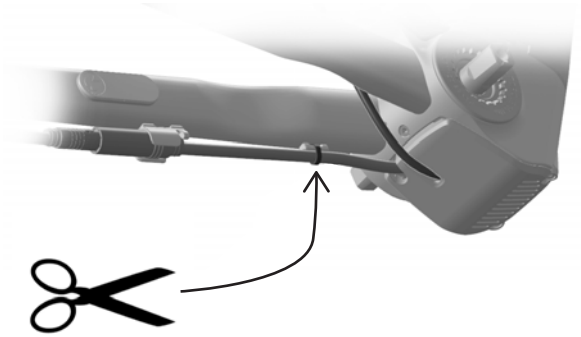

3. Unplug all cables in the bottom bracket shell.

   NOTICE: Do not pull the cables apart by the wires — this can damage them.

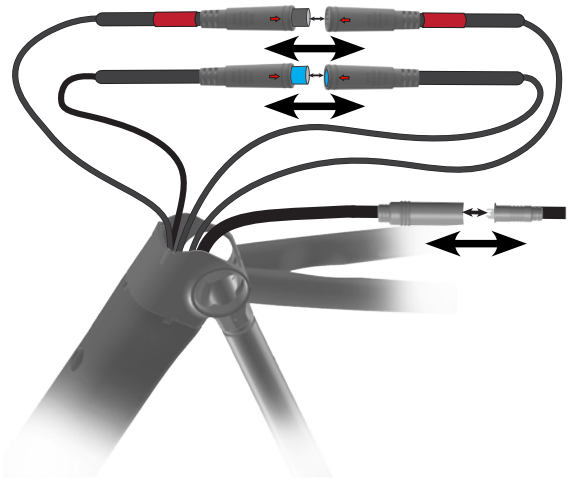

4. Remove the two bolts (6) under the down tube.

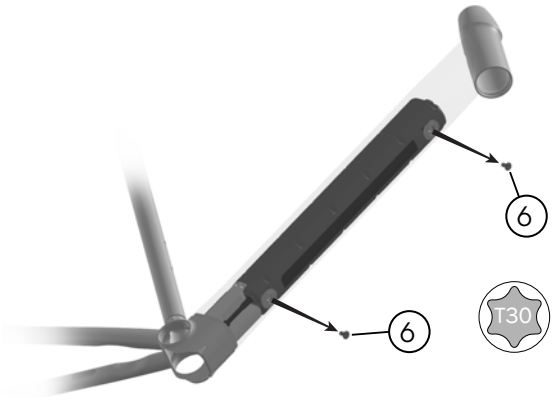

5. Rotate the bicycle and slide the battery assembly out.

   NOTICE: Don't drop it! The battery can slide out easily and fall to the floor, causing damage.

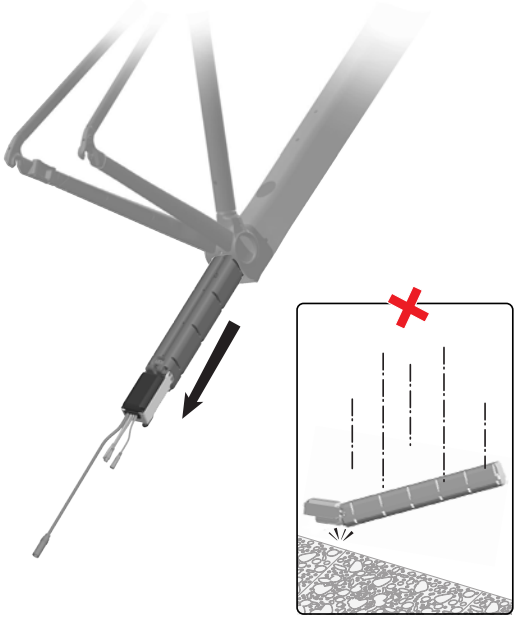

6. Unplug the battery and remove the bolts (7) connecting the controller to the battery.

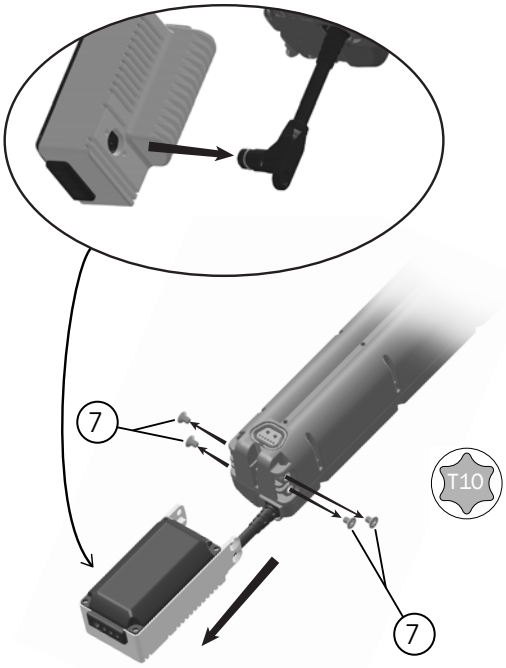

Install the battery

AUTHORIZED DEALERS ONLY: Only authorized dealers should perform service on the e-system. Improper handling, tools used, or torque applied to these parts may result in damage to the e-system components and cables.

1. Use the four bolts (7) to attach the controller to the battery (if they are disconnected). Torque the bolts to 3Nm.
2. Position the cables to the sides of the down tube and slide the battery assembly into the down tube.

   Do not force it — the battery should slide in without putting extra pressure on it. Readjust the cables, if necessary.

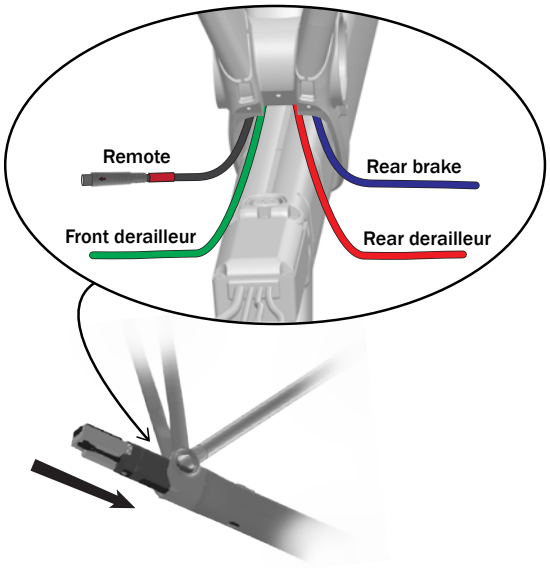

NOTICE: Make sure no cables are between the charge port opening and the battery — you won't be able to plug in the charger if they are in the way.

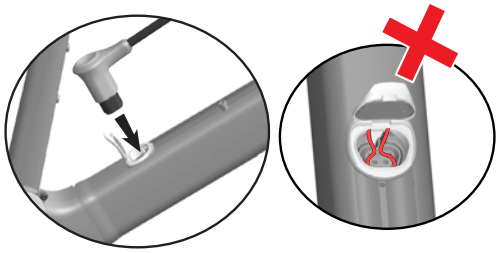

3. Tighten the battery bolts (6) to 6Nm.

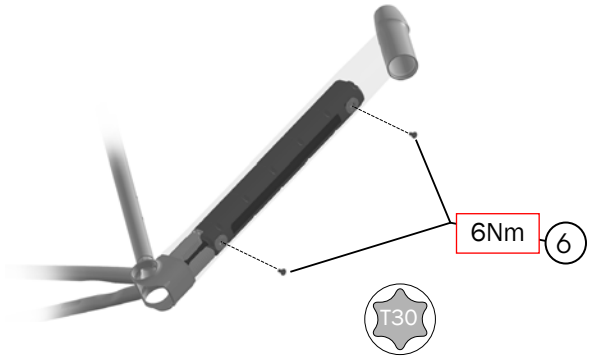

4. Install the bottom bracket/torque sensor (see page 6).
5. Reconnect all cables.

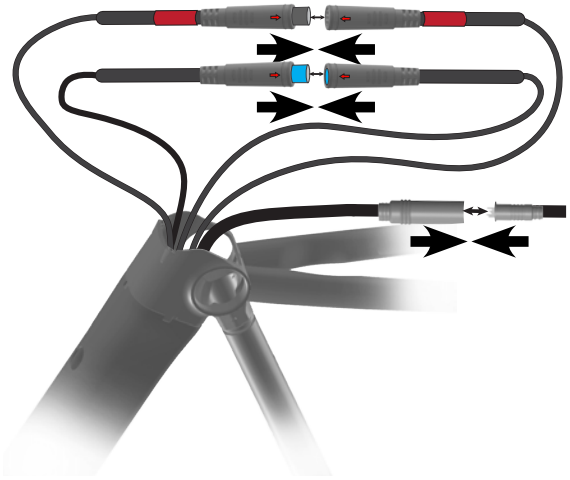

6. Connect the motor cable plug and attach the motor cable to the chainstay using a zip tie.

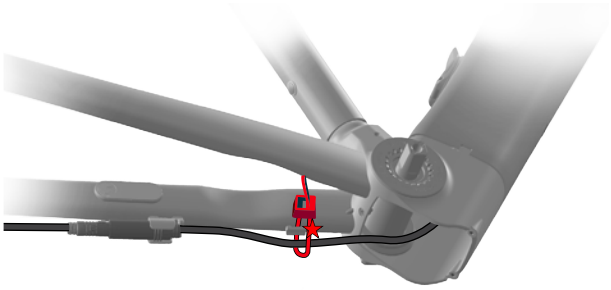

7. Fit all cables into the bottom bracket shell and install the cover (9). Tighten the bolts (8) to 2Nm.

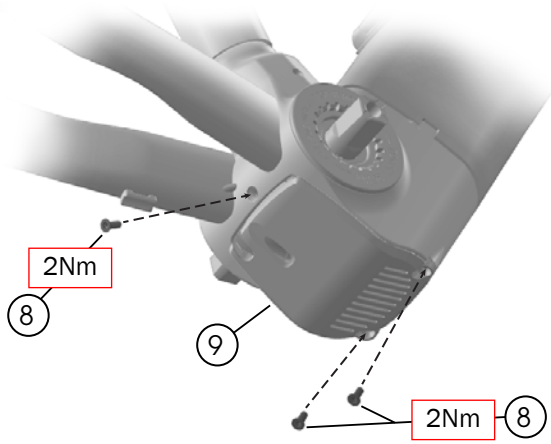

Fork and headset

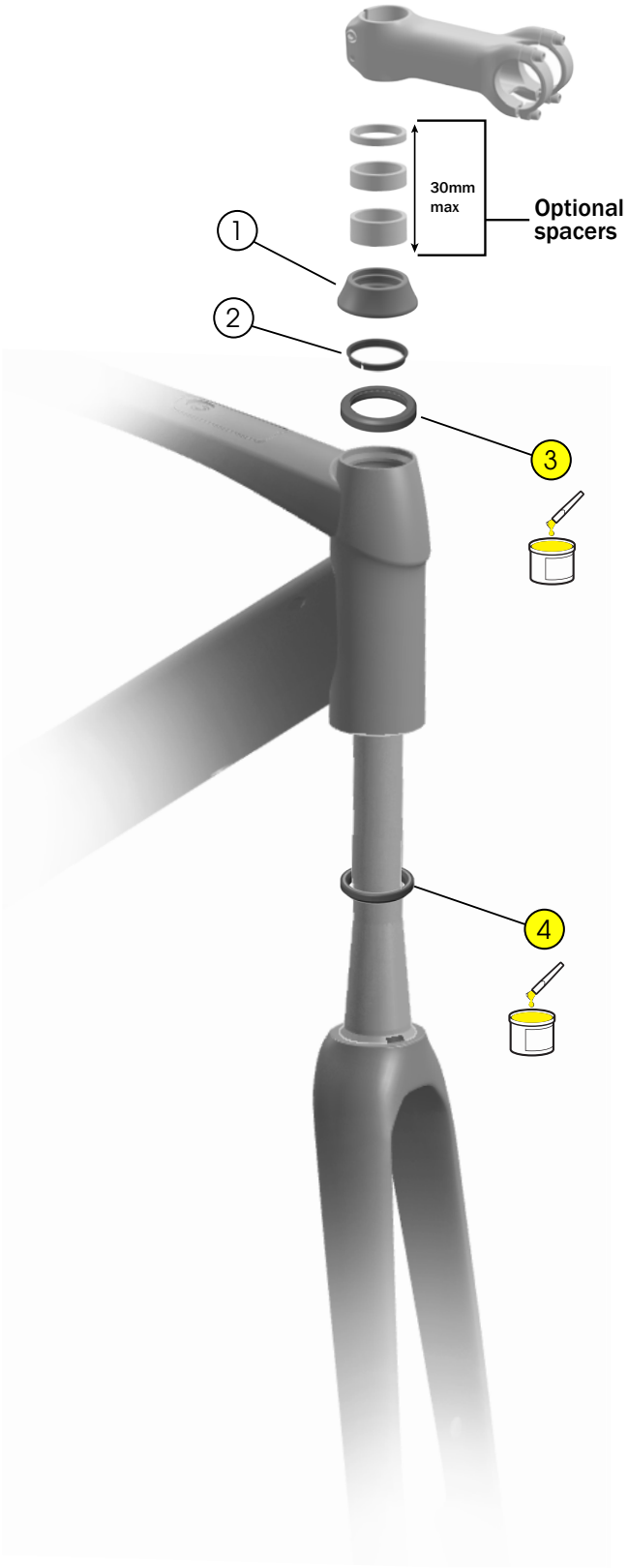

1. Top cover — W590959
2. Compression ring — W532842
3. Upper headset bearing — W531676
4. Lower headset bearing — 417578

Chainkeeper

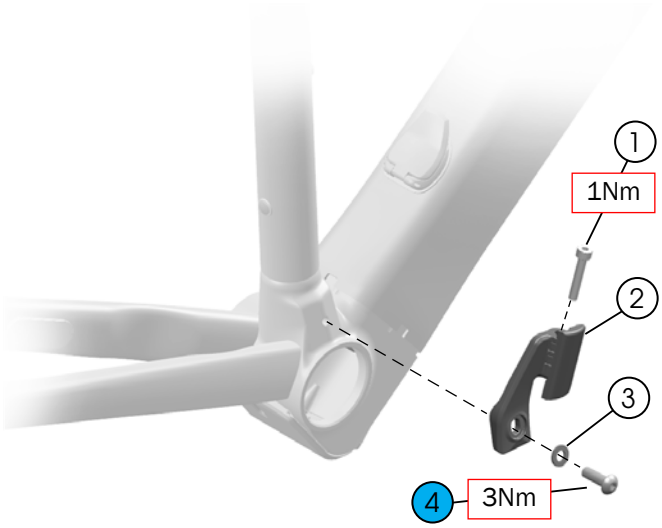

1. Bolt (M4x22mm)
2. Chainkeeper
3. Flat washer (M5x10mm)
4. Bolt (M5x16mm)

5305773

Adjust the chainkeeper

1. Shift to the lowest gear (largest rear cassette cog) and front, inner chainring.
2. Loosen the bolt (1) on the chainkeeper.
3. Rotate the loose piece (shown in red below) so there is 1mm of horizontal clearance to the chain.

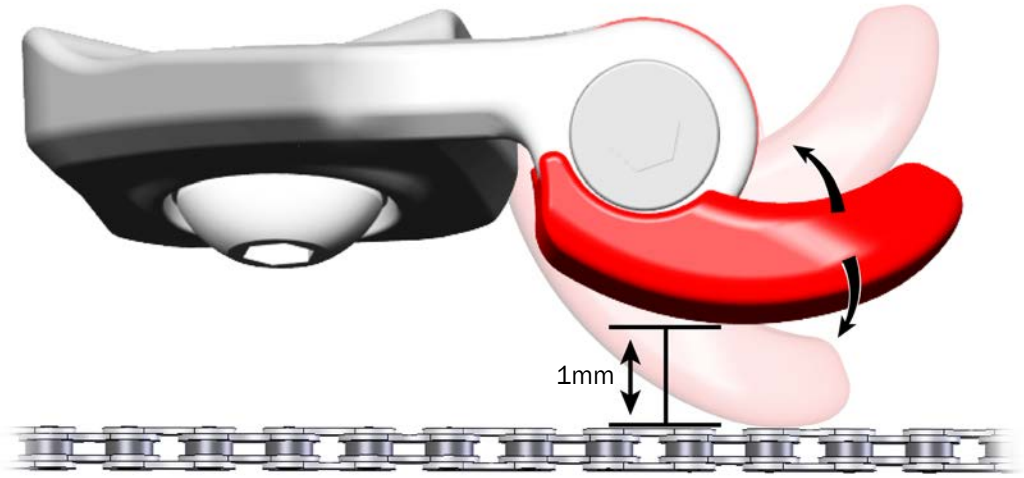

4. Tighten the bolt (1) to 1Nm.

Frame mounts

Fenders and rear rack



1. Bolts (M4x8mm) — W575056
2. Seat stay bridge — W503255
3. *Hole cover — W308963

**Used to cover fender and rack mount bosses*

Access plug

Remove the hole cover (1) and use the upper access hole to push the remote out.

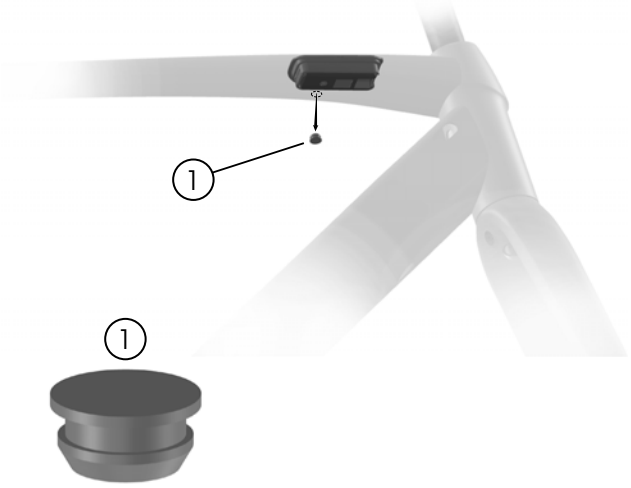

1. Hole cover — W440699

Water bottle cage mounts

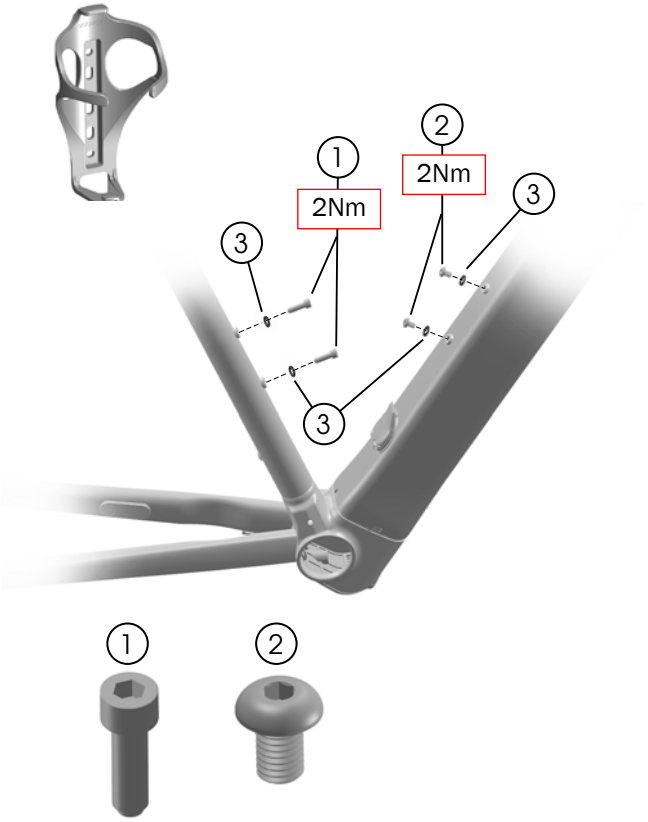

1. Bolts (M5x16.5mm)
2. Bolts (M5x8mm) — W598484
3. Washers (M5)

Specifications

Frame

		AL+
Rear hub OLD		141mm
Front hub OLD		100mm
Upper fork steerer tube OD		28.6mm
Lower fork steerer tube OD		38.1mm
Brake rotor diameter min/max	**Front**	140/160mm
	Rear	140/160mm
700c tire, max width	**With fenders**	32mm
	Without fenders	38mm
Fender compatible	**Front**	Yes
	Rear	Yes

Chainline/chainring

	Chainline	Max chainring teeth (T)		
		Small	Large	Single (1x)
Shimano	43.5mm	34T	50T	—