TREK



2024 DOMANE AL GEN 4

SERVICE MANUAL

Contents

About this manual

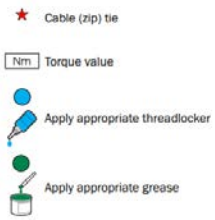

Brake/shift routing



Universal derailleur hanger (UDH)

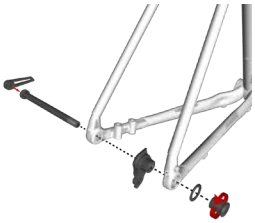

Chainkeeper

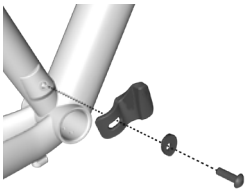

Headset



Install the headset

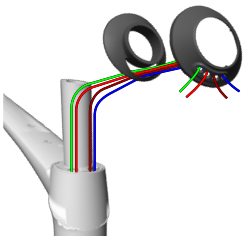

Frame mounts

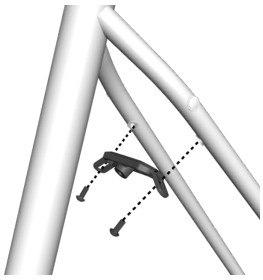

Copyright 2023 Trek Bicycle Corporation All Rights Reserved

About this manual

Scope

This manual contains parts diagrams, specifications (such as grease and torque values), instructions, part numbers, and helpful tips. It does not contain instructions for all components (such as brake calipers). Refer to the original manufacturer for more information.

Replacement parts

Trek recommends using only Trek OEM (original manufacturer) replacement parts.

Additional info

The Owner's Manual is available at Trekbikes.com/manuals.

Legend

★ Cable (zip) tie

Nm Torque value

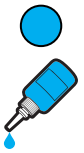

Apply appropriate threadlocker



Apply appropriate grease

Safety

WARNING

Properly tighten hardware

Always tighten hardware to the specified torque. Over-tightening hardware could deform or break the hardware or components. Under-tightening hardware could cause hardware or components to become loose. Either situation could damage the bicycle and result in injury to the rider.

WARNING

Reapply threadlocker

All reused-fasteners with pre-applied threadlocker must be cleaned with isopropyl alcohol and have new thread-locker applied before re-assembly. If threadlocker is not applied, the fasteners may loosen which could damage the bicycle and result in injury to the rider.

Brake/shift routing

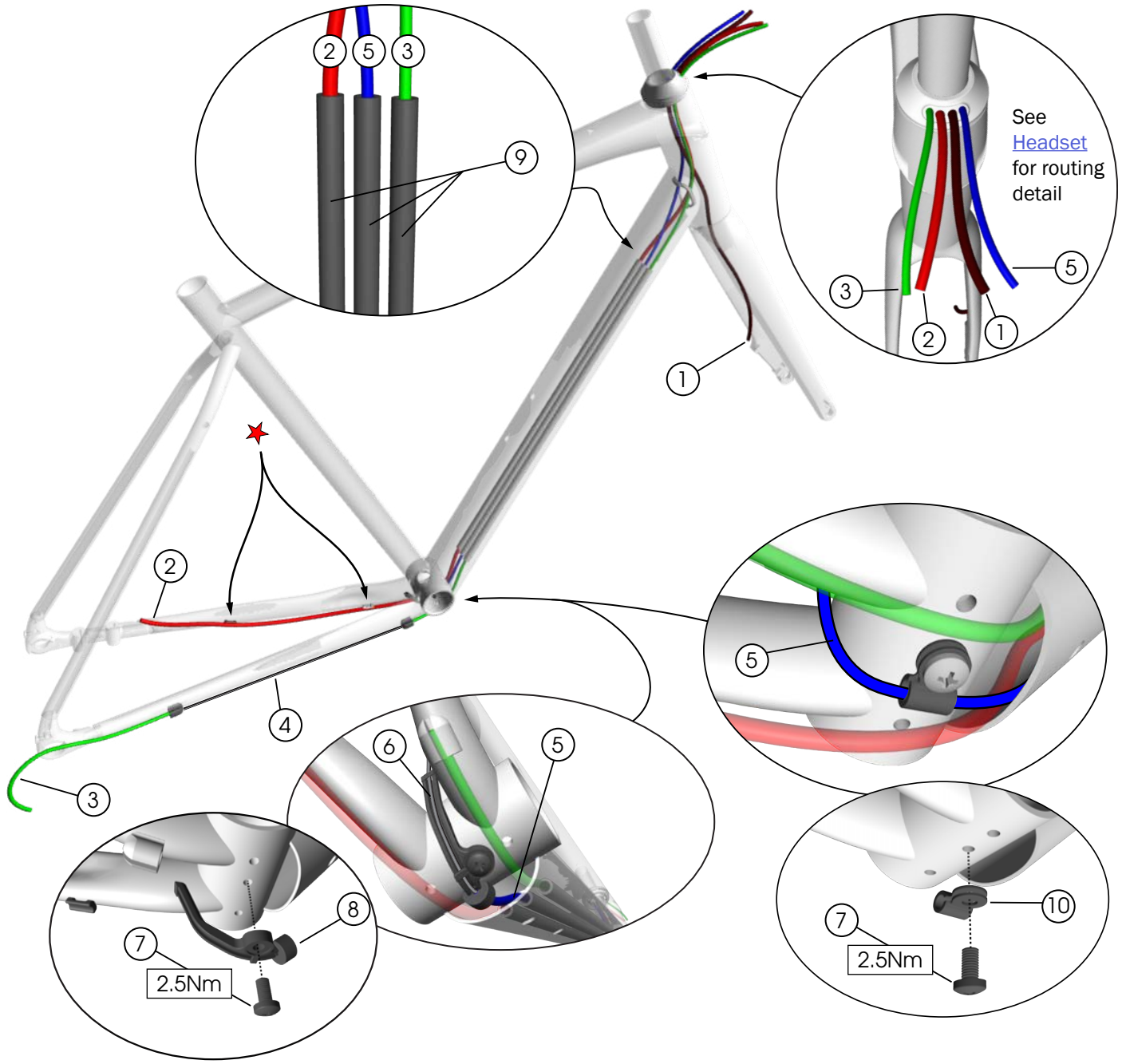

1. Front brake hose
2. Rear brake hose
3. Rear derailleur housings
4. Rear derailleur cable
5. Front derailleur housing
6. Front derailleur cable
7. Fastener (M5x10mm) — *W575392*
8. Cable guide — *W575392*
9. Foam sleeves — *W528082*
10. Cable guide (P-clamp) — *W316706*
    NOTE: This part is used with Shimano 105 front derailleurs only.

Universal derailleur hanger (UDH)

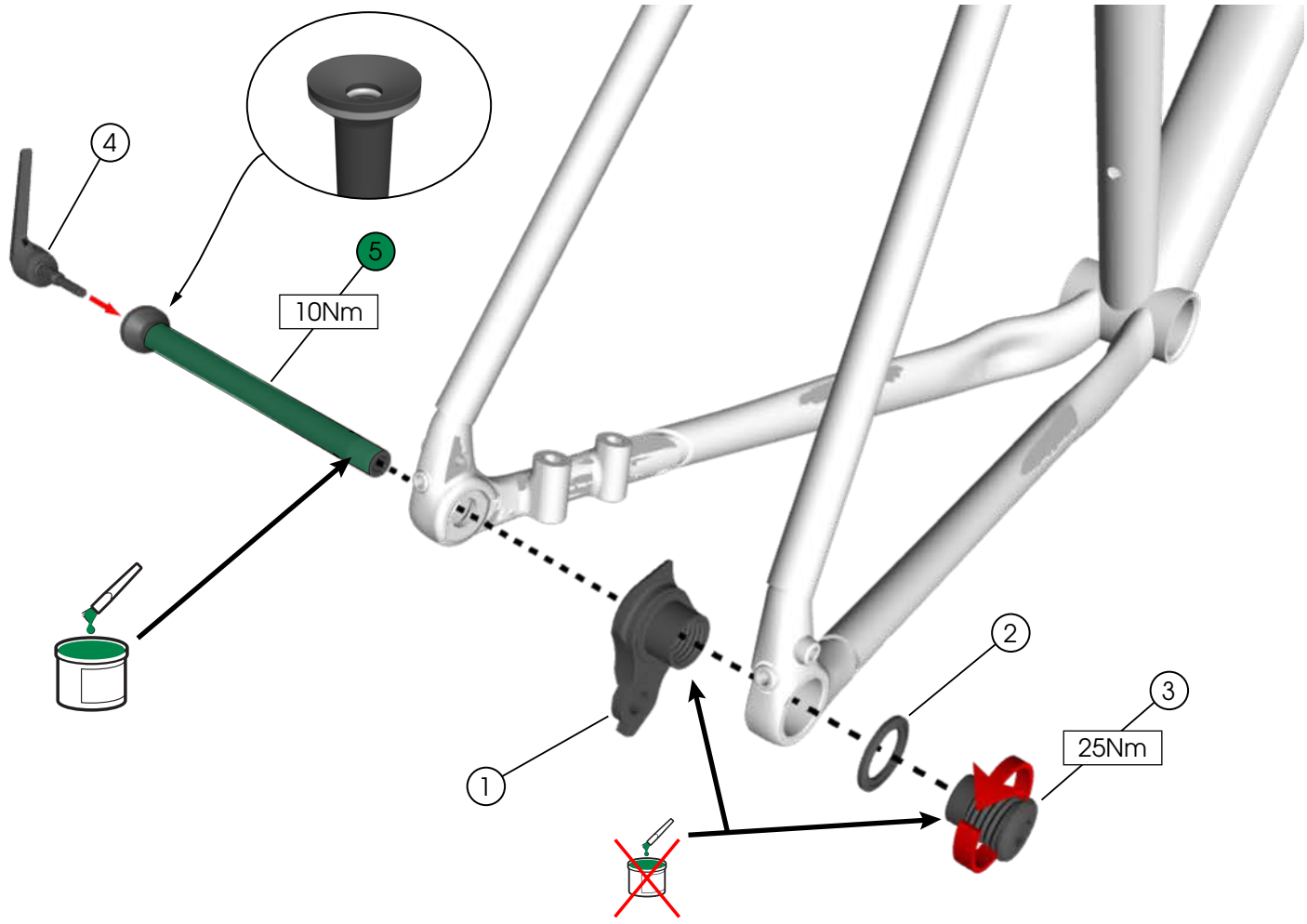

1. Rear derailleur hanger
   NOTICE: Do not apply grease.
2. Washer (25mm)
   Bolt (M12)
3. **NOTICE:** Do not apply grease. Left-hand thread. Do not over-tighten. Over-tightening could cause the hanger to break.

W5271424

4. Lever (6mm allen) — *W5312899*
5. Thru-axle (M12x166mm) — *5312169*

For additional information about the UDH, refer to the SRAM user manual at sram.com.

Chainkeeper

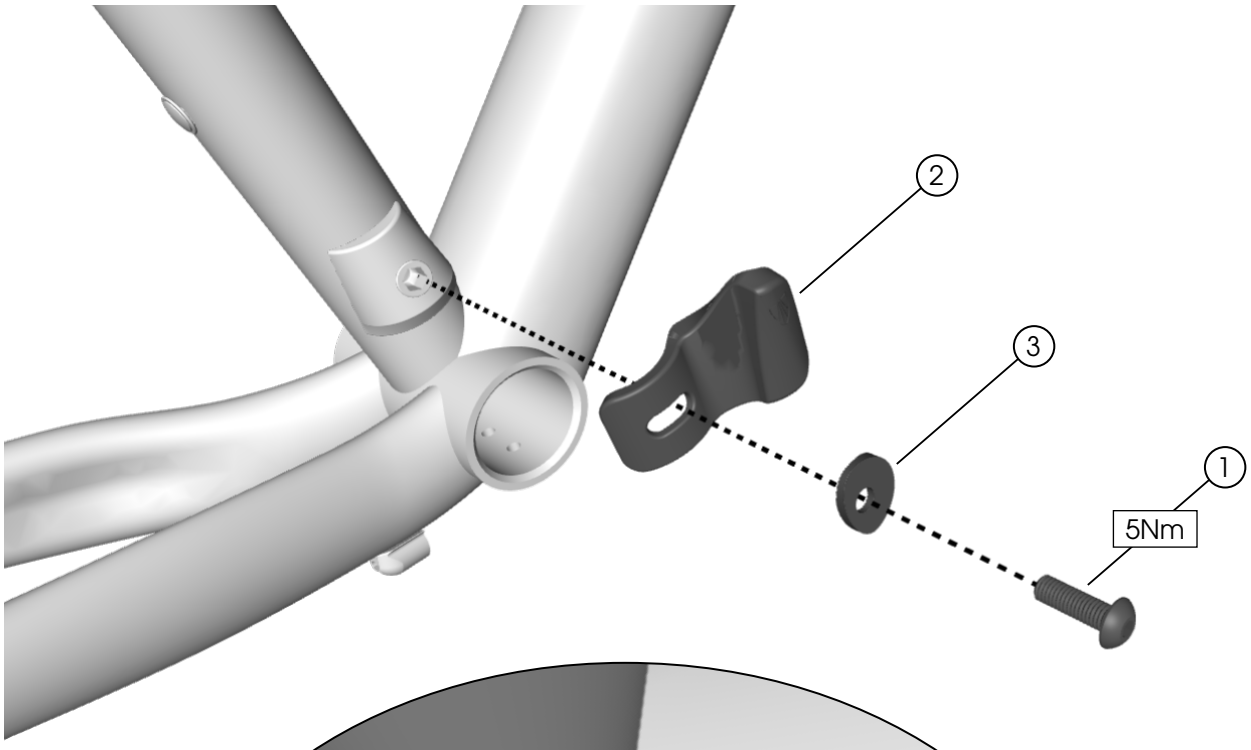

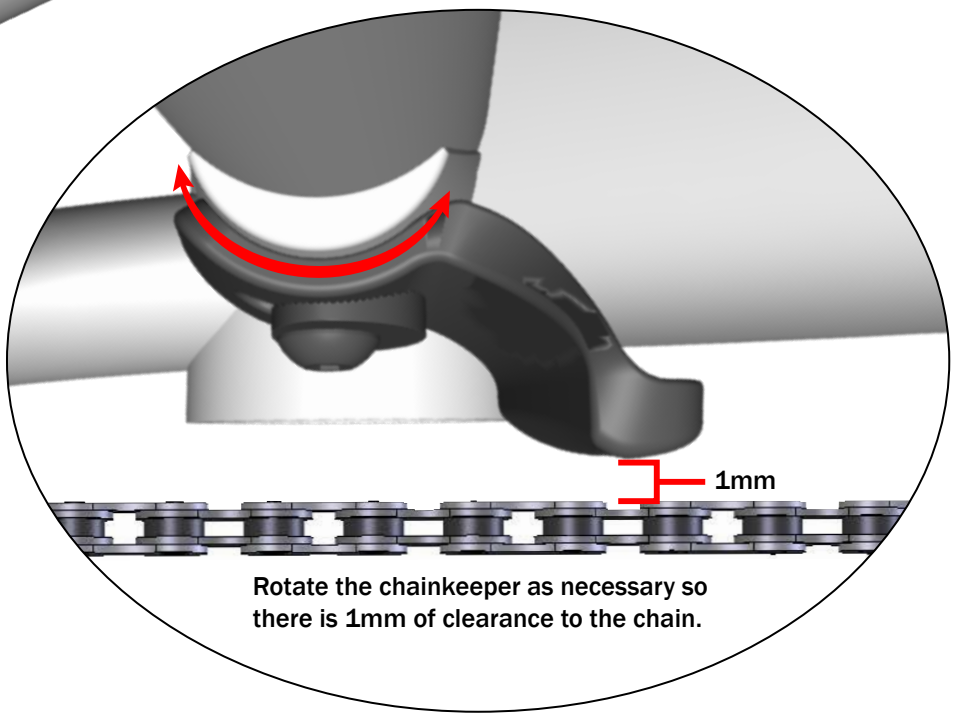

1. Fastener (M5x16mm)
2. Chainkeeper (30-36T) — *431223*
3. Washer

Headset

See Install the headset on pages 7-9 for complete instructions.

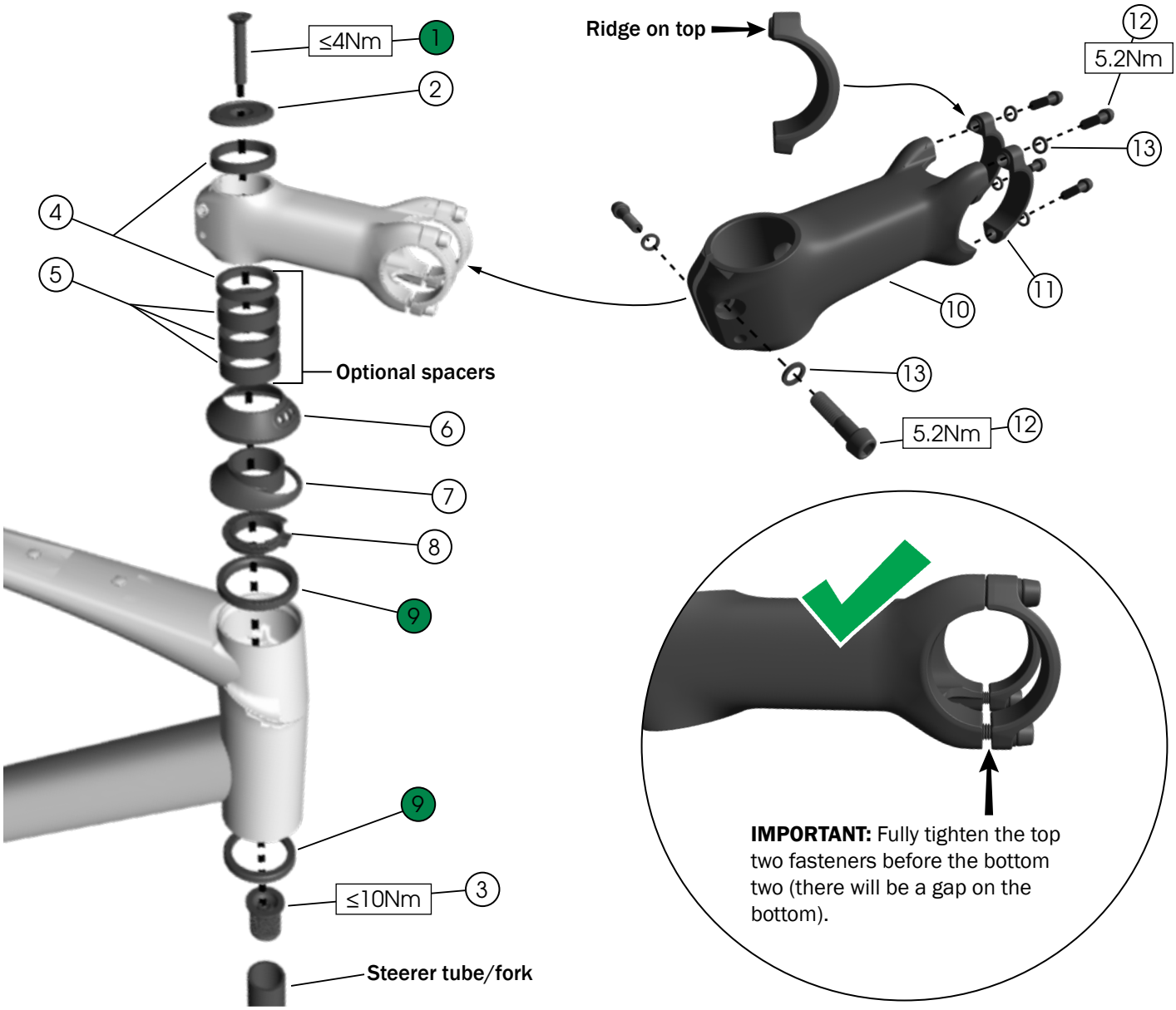

1. Top cap fastener
2. Top cap
3. Compression plug

W547432

4. Spacers, 5mm — *5253930*
5. Spacers, 10mm — *5253931*
6. Shroud — *W5308932*
7. Bearing cover — *W5274615*
8. Split ring — *W5274269*
9. Bearings — *W540243*
10. Stem, Elite (°7 x 80mm)
11. Faceplates
12. Stem fasteners (M5x15mm)
13. Washers (M5)

587666

Install the headset

1. Install the compression plug into the steerer tube.

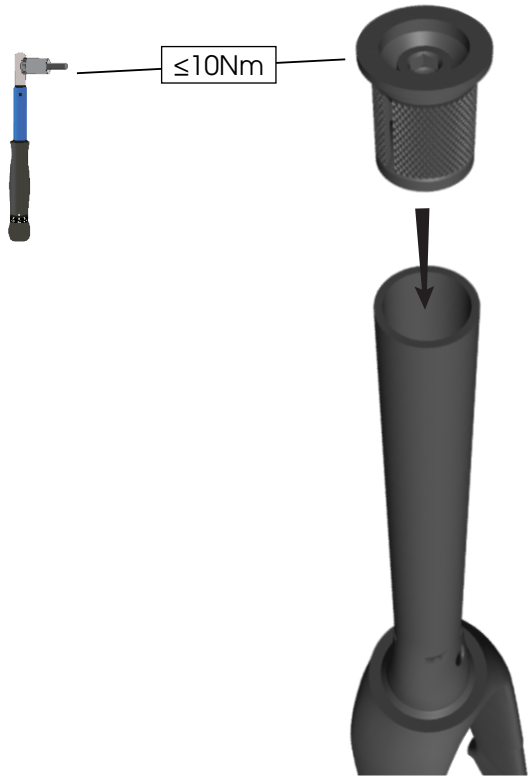

2. Grease the headset bearings and locations shown below.

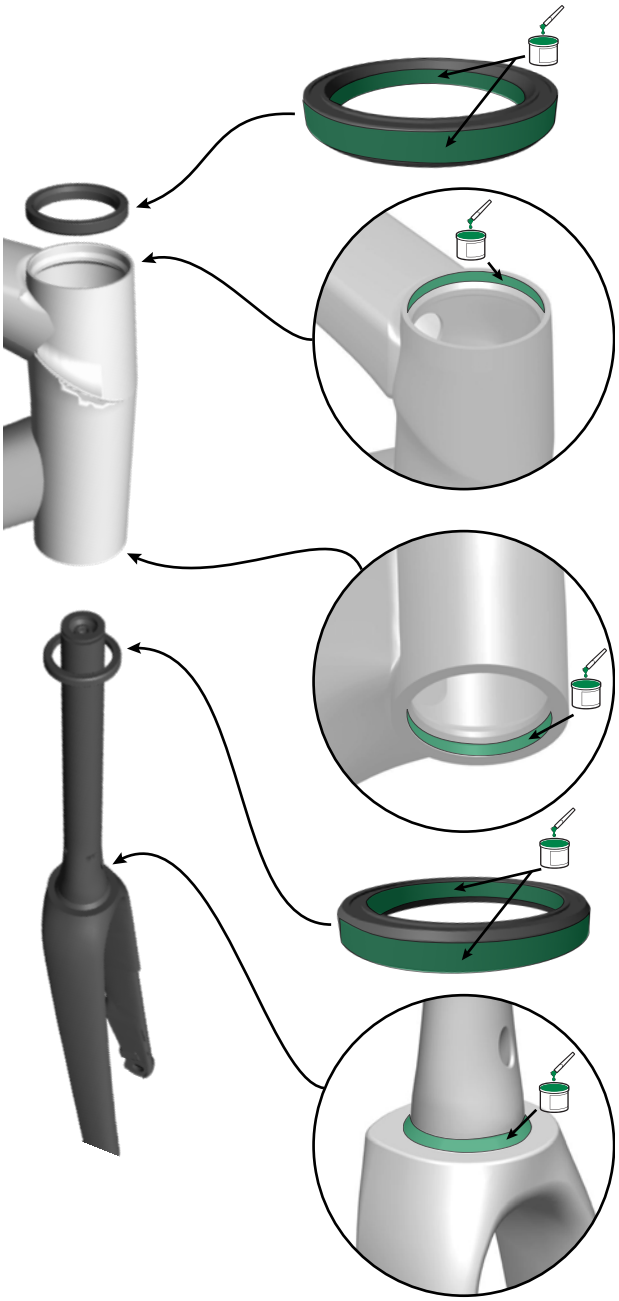

Install the headset (continued)

3. Route the split ring down the steerer tube and seat it into the upper bearing.

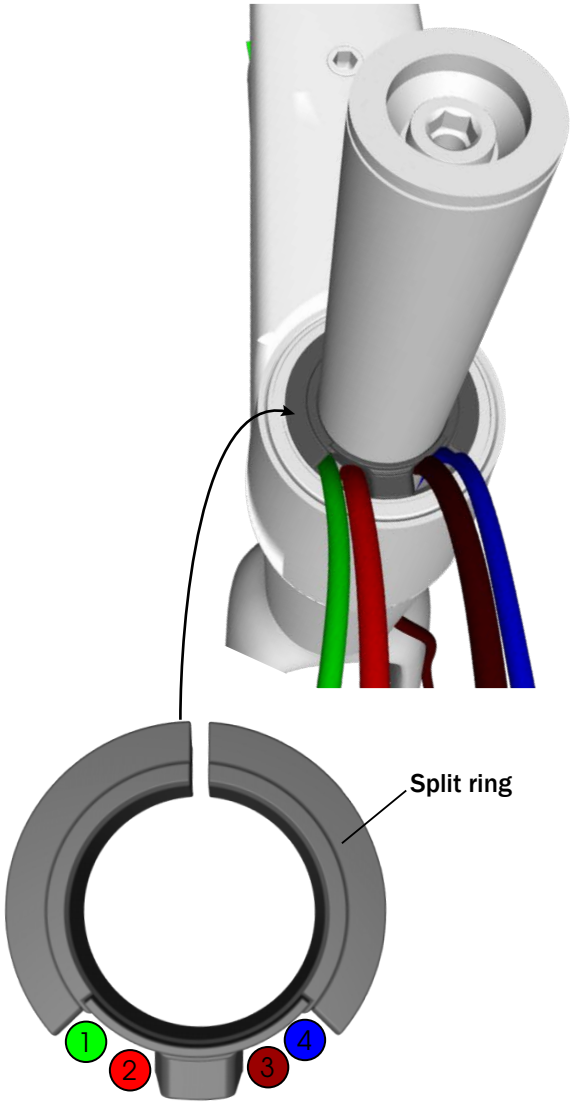

1. Rear derailleur housing
2. Rear brake hose
3. Front brake hose
4. Front derailleur housing

4. Route the bearing cover and shroud through the housings and snap them together. Make sure to press together any gaps.

TIP: Squeeze the shroud from the sides to attach it to the bearing cover more easily.

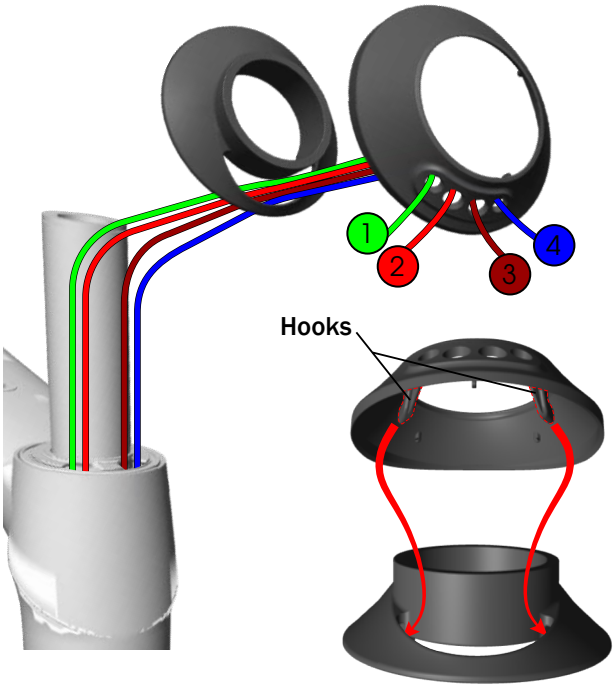

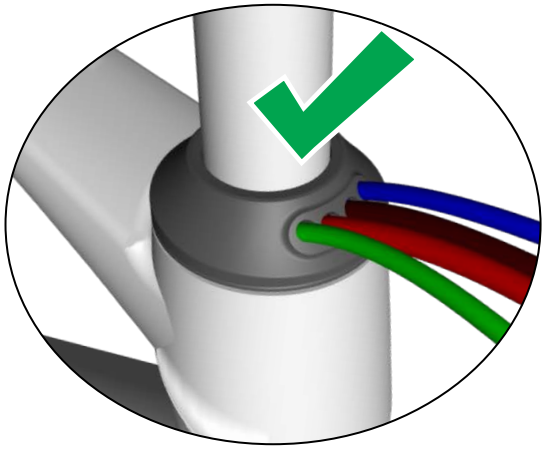

Install the headset (continued)

5. Slide the spacers and stem down the steerer tube — do not tighten the stem fasteners.

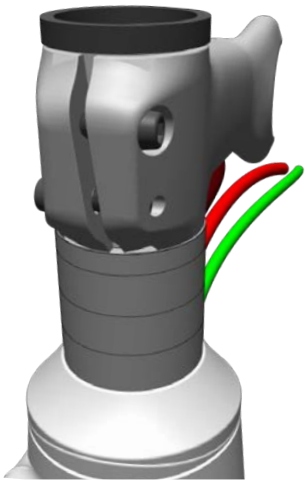

6. Install the top cap and top cap fastener.

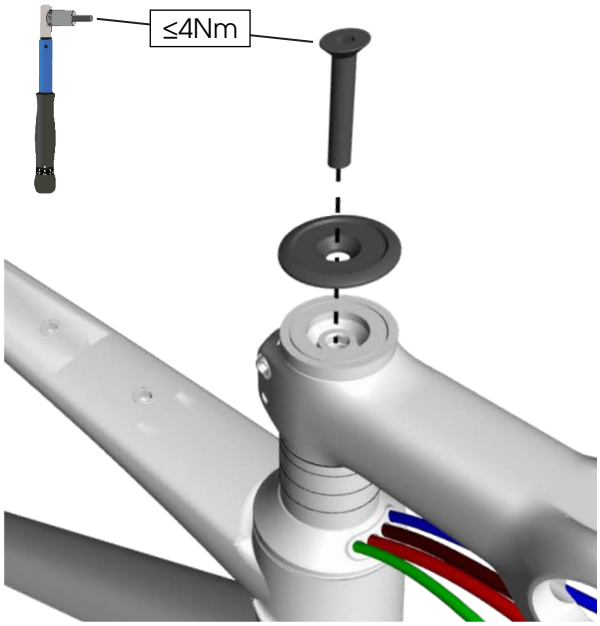

7. Tighten the stem fasteners — alternating between them — until both are torqued to 5.2Nm.

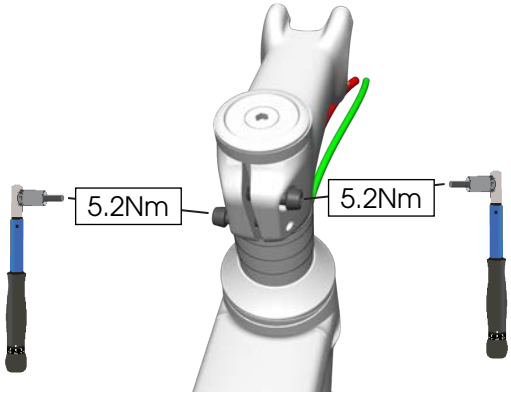

8. Install the faceplates and faceplate fasteners. Fully tighten the top two bolts before the bottom two (there will be a gap on the bottom).

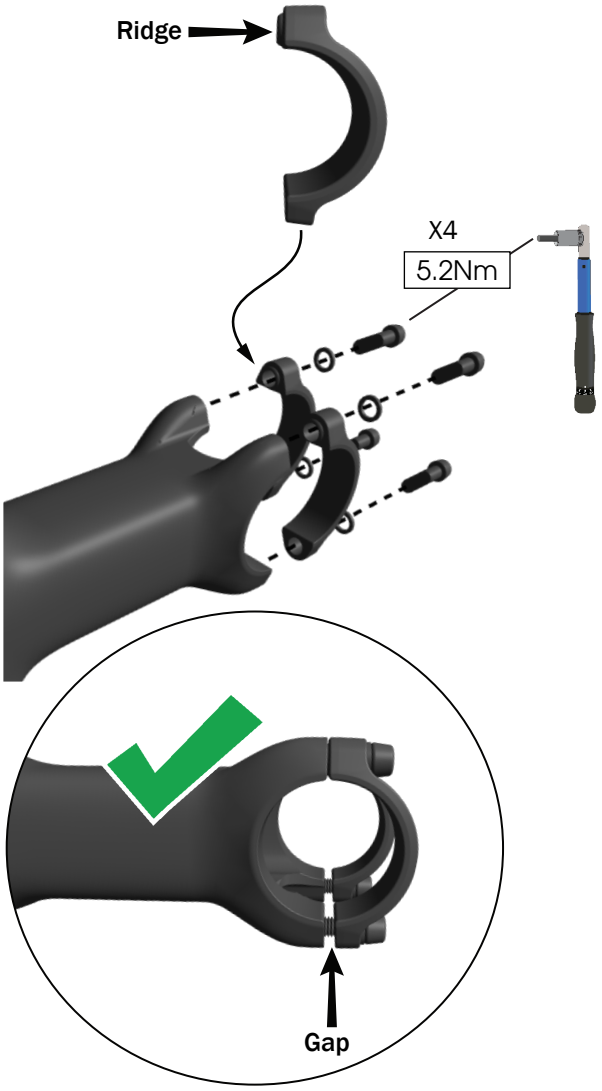

Frame mounts

Rear fender bridge

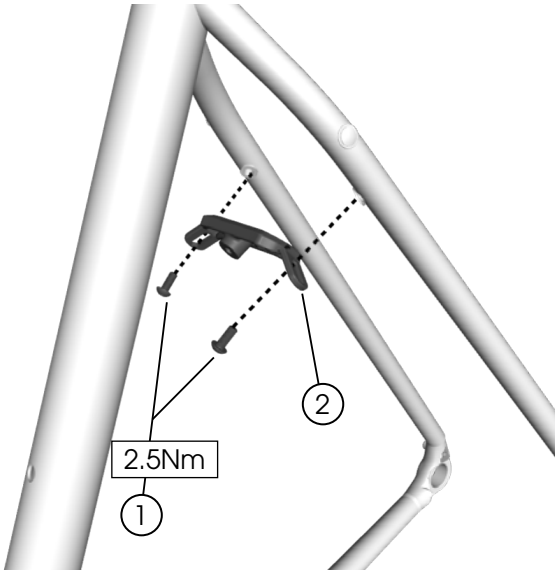

1. Fasteners (M4x10mm) — *W330683*
2. Fender bridge — *W5312166*

Water bottle mounts

NOTE: Water bottle cages are sold separately.

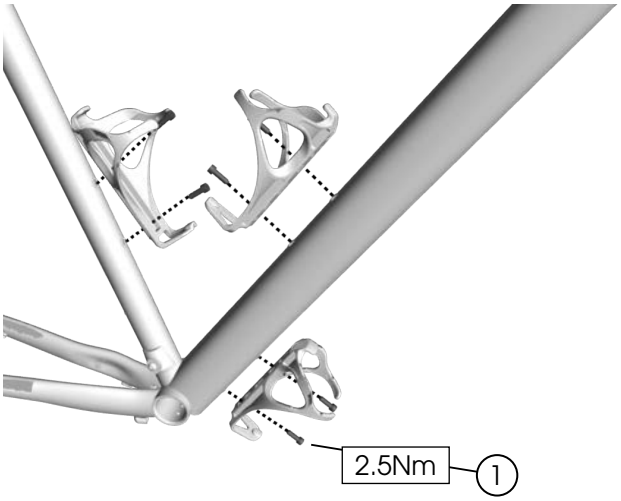

1. Fasteners (M5x16mm) — *5257275*

Specifications

Frame

		Domane AL
Rear hub OLD		142mm
Front hub OLD		100mm
Upper fork steerer tube OD		28.6mm
Lower fork steerer tube OD		38.1mm
Brake rotor diameter min/max	**Front**	140/160mm
	Rear	140/160mm
Fender compatible	**Front**	Yes
	Rear	Yes

Domane	**Model**	**Shimano front derailleur**	**With fenders**	**No fenders**
Gen 4	AL 5	12sp	700 x 35 mm	700 x 38 mm
	AL 4	11sp	700 x 35 mm	700 x 38 mm
	AL 4	10sp	700 x 32 mm	700 x 33 mm
	AL 2	8sp	700 x 35 mm	700 x 38 mm

Chainline/chainring

Chainline	Max chainring teeth (T)		
	Small	Large	Single (1x)
43.5mm	39T	53T	
43.5mm	—	—	50T