CITY & E-BIKES

QUICK ASSEMBLY GUIDE



TREK

WARNING: Failure to follow the assembly instructions outlined in this guide could lead to an accident, which could cause serious injury or death.

IMPORTANT: This assembly guide is not a replacement for the Trek Owner's Manual or other instructions required for your bicycle. The Trek Owner's Manual contains essential safety information that you must read and understand before riding your new bike. The manual is included in the box and can also be found at trekbikes.com/manuals.

WARNING: You add to the risk of injury if you use your bicycle in an incorrect manner. Misuse can add stress to the bike and cause the frame or components to break. To decrease your risk of injury, use the bicycle in the manner for which it was designed (see the "Use conditions & weight limits" section in the Trek Owner's Manual).

To see the guide and watch the assembly video, use this QR code:
trekbikes.com/how-to-assemble-bike > City bikes

If you are unsure about the final assembly, take your bike to a Trek retailer for an assembly inspection before riding.

WARNING: Use only hardware supplied by Trek to complete the assembly of the bicycle.

1 Remove the tools from the tool box.

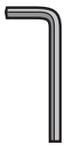

L-wrench

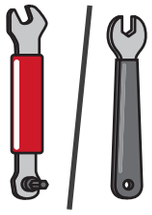

Pedal wrench



Pedal grease

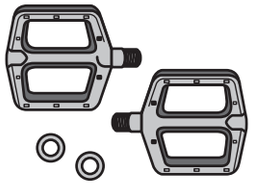

Pedals and washers (if included)

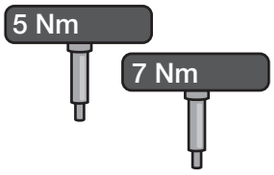

Torque wrenches

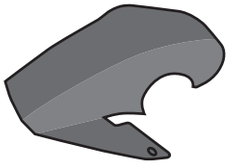

Stem cover (if included)



Manuals

You can also find the manuals online at trekbikes.com/manuals.



Ebike quick start guide (for ebikes)

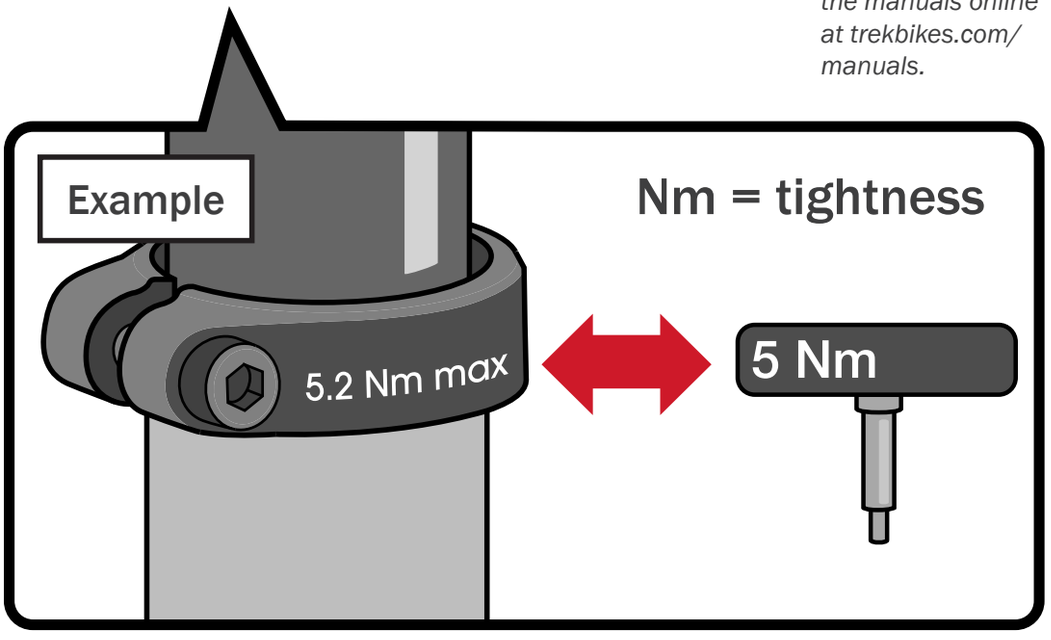

Match the number on the torque wrench to the etching on the component.

Parts and tools will vary based on bike model. Not all tools are provided (such as a tire pump).

2 Take the bike out of the box and remove the cardboard around the fork.

To protect the finish, you may want to leave the frame wraps in place until the bike is assembled.

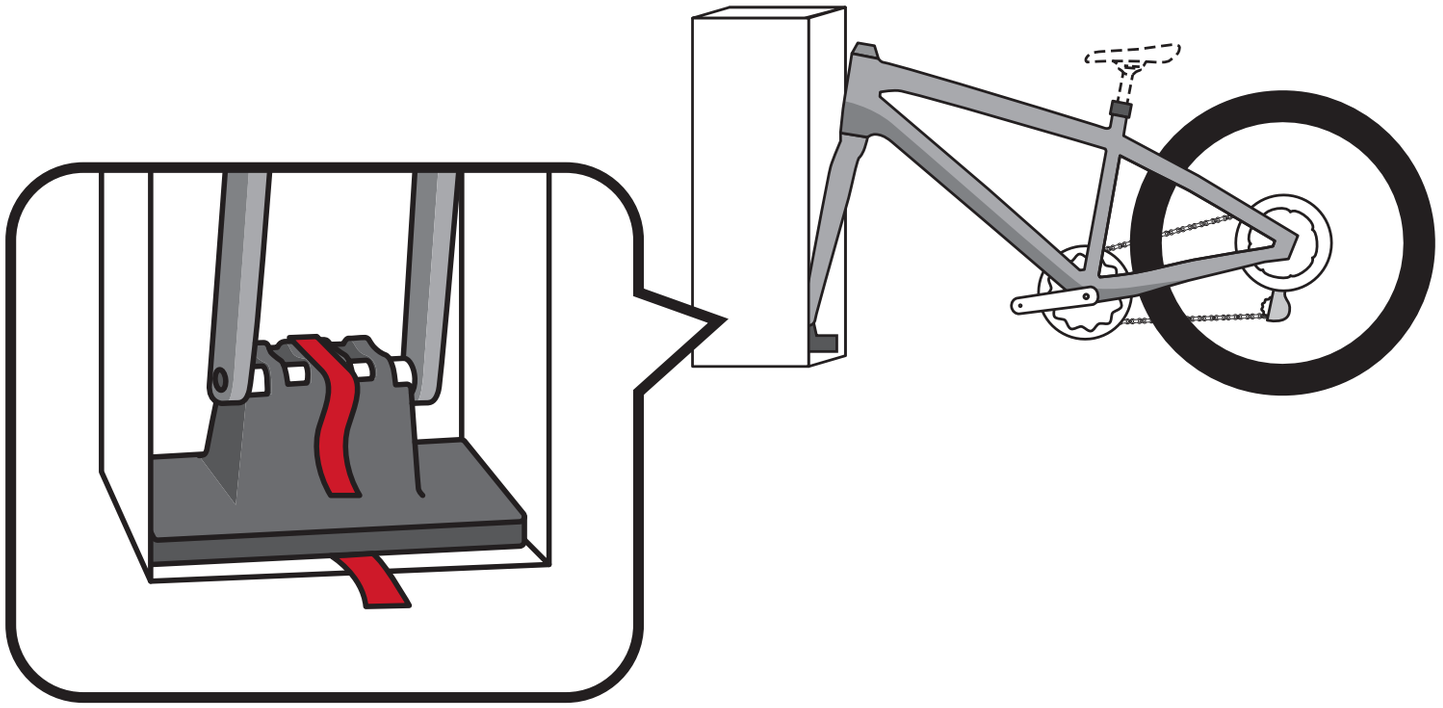

For e-bikes, make sure your e-system is off before assembly.

3 Check the bike for shipping damage and make sure all parts are included. Pay special attention to the fork legs and the seat stays (both inside and outside surfaces).

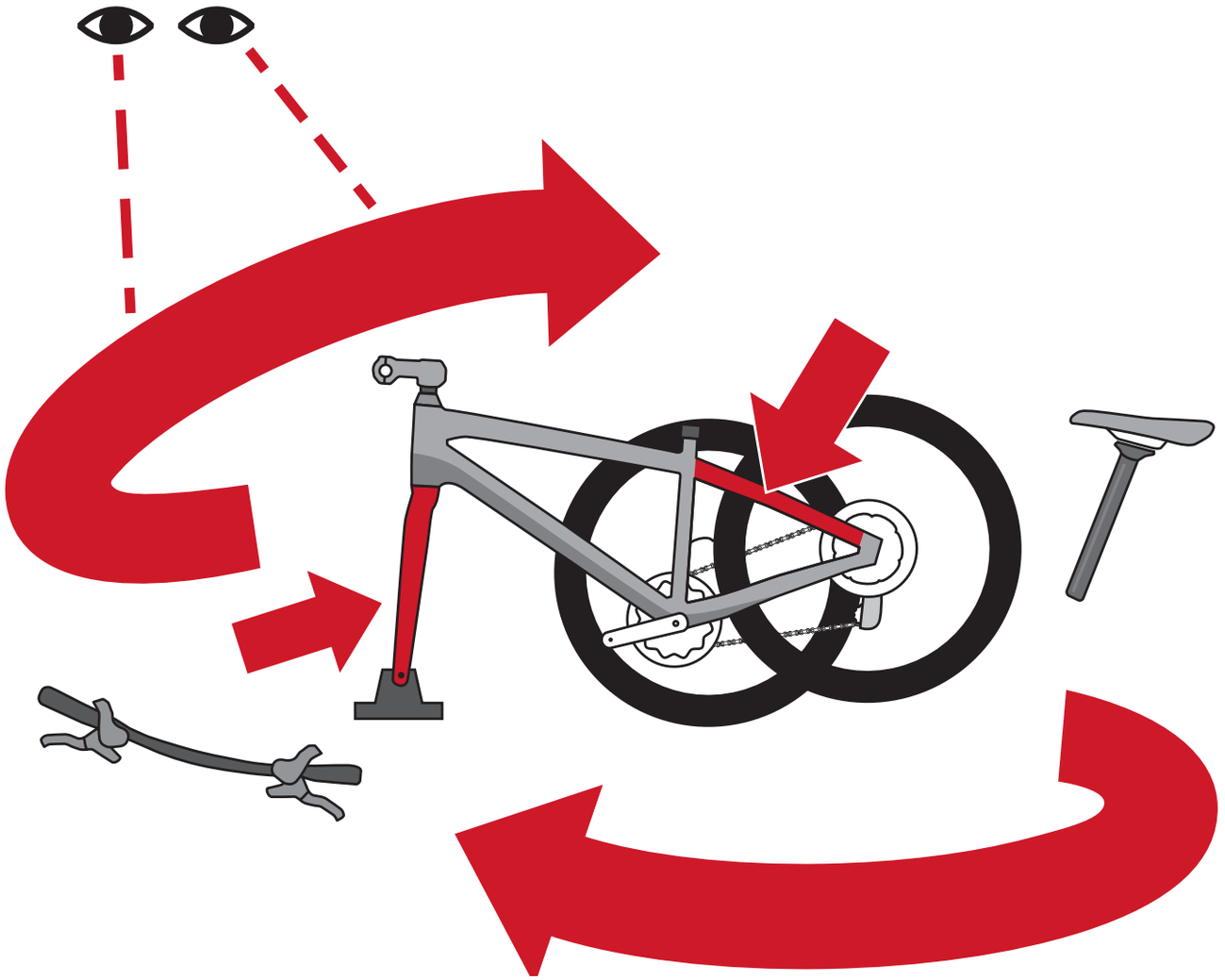

If you notice damage or you're unsure about the initial inspection of your bike, contact Trek Customer Care at 1-800-585-8735.

4 Is the handlebar installed?

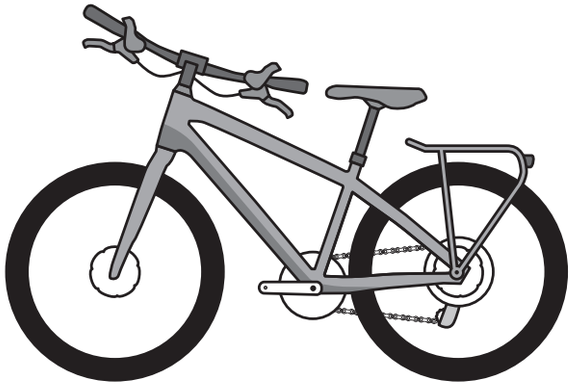

Yes

Go to step 5

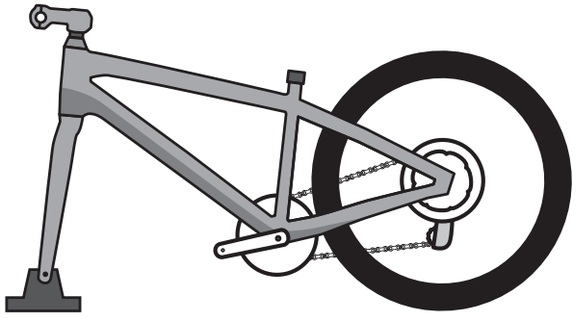

No

Skip to step 9

Is the handlebar attached to the stem, but needs to be installed?

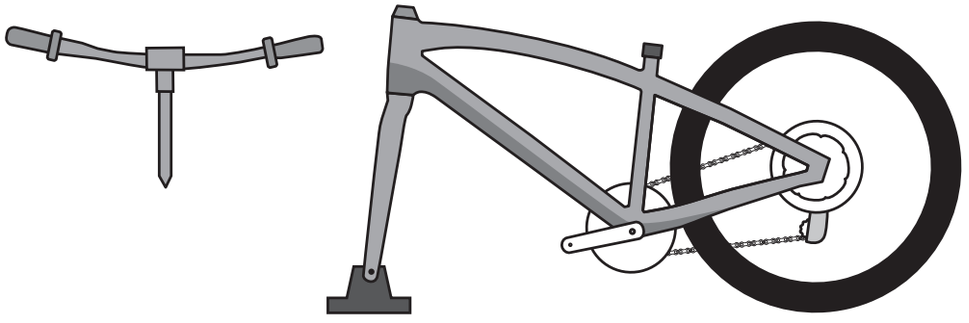

Yes

Skip to step 13

For FX+7 see step 6.

5

Loosen the stem bolts and rotate the handlebar so it's aligned with the front wheel. Then tighten the stem bolts one half turn at a time—switching between them—until you feel the tool click.

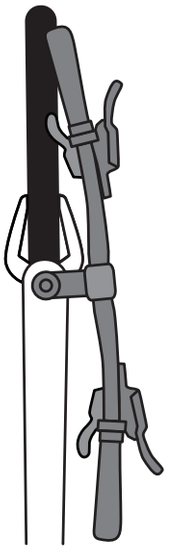

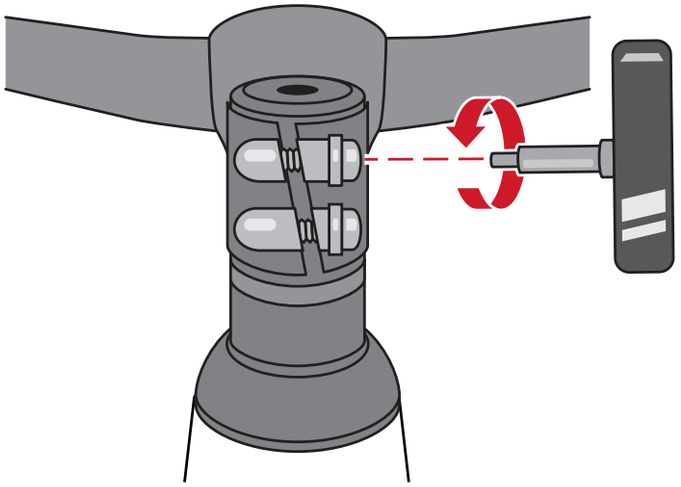

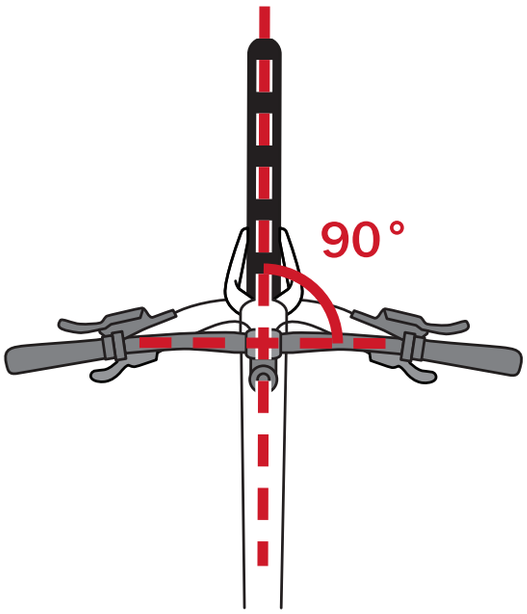

Stem bolt positions vary by model.

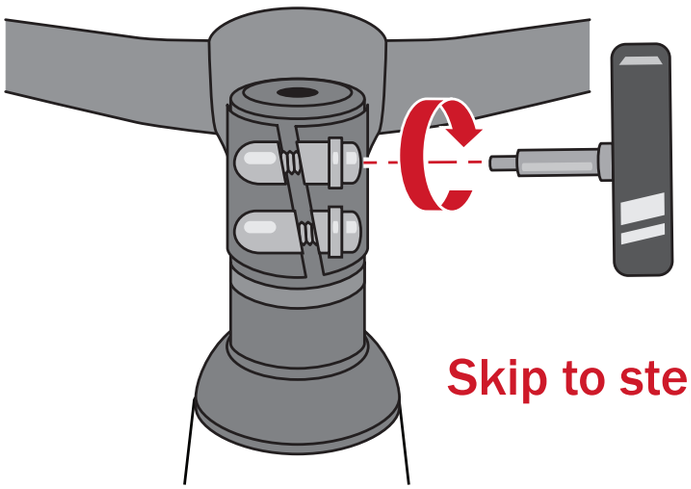

Skip to step 14

6

Remove the Quad Lock®. Loosten the fastener. Lift from the front—starting with the front notches—then the rear notch. Detatch the cable.

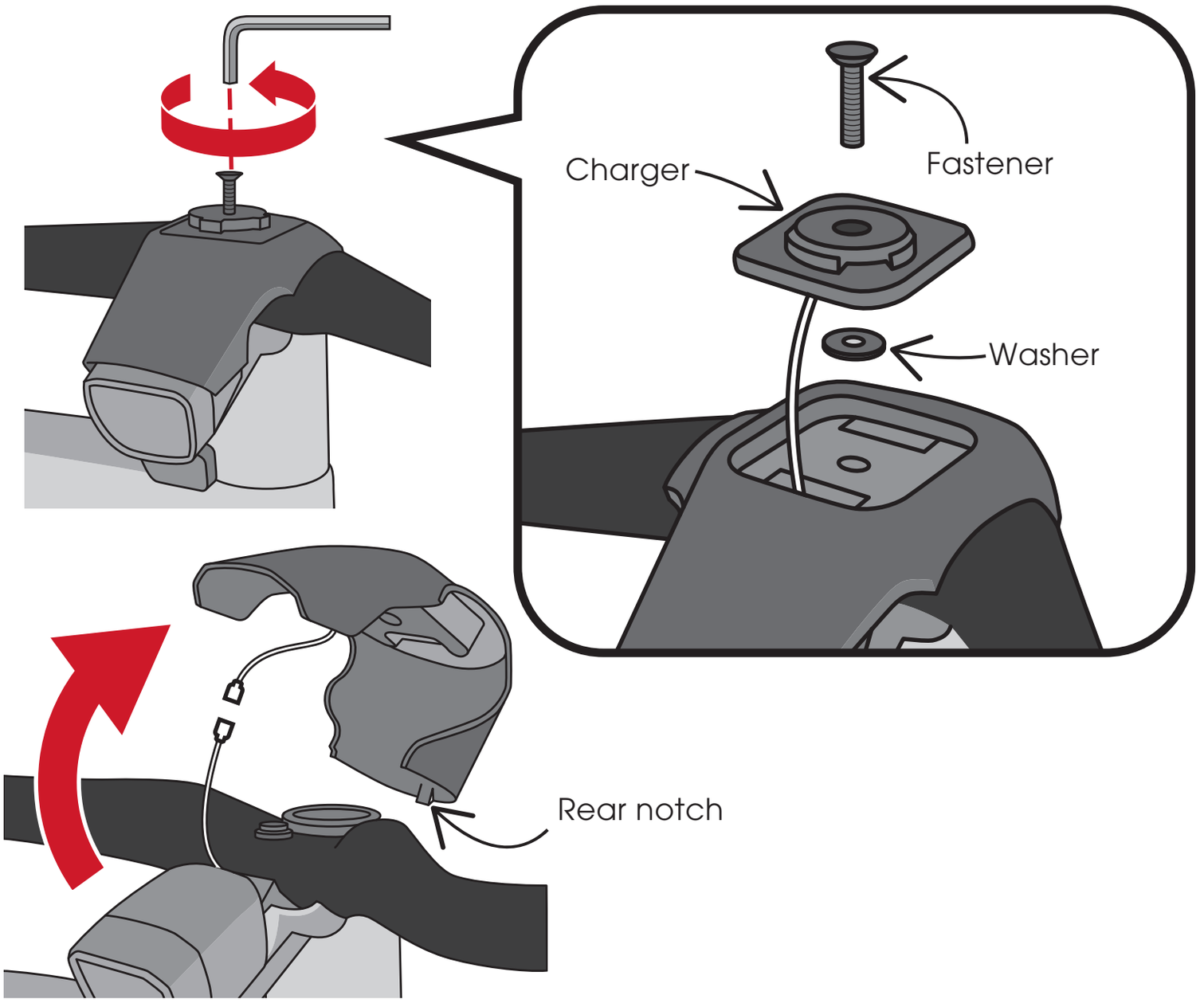

7 Loosten the fasteners on the stem and rotate the handlebar so it's aligned with the front wheel. Once aligned, fully tighten the fasteners on the drive side of the barstem — switching between them — until they are fully torqued. Then fully tighten the fasteners on the non-drive side of the barstem — switching between them — until they are fully torqued.

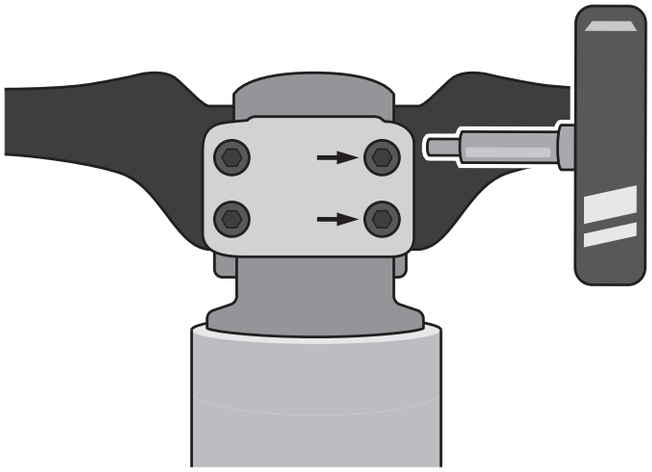



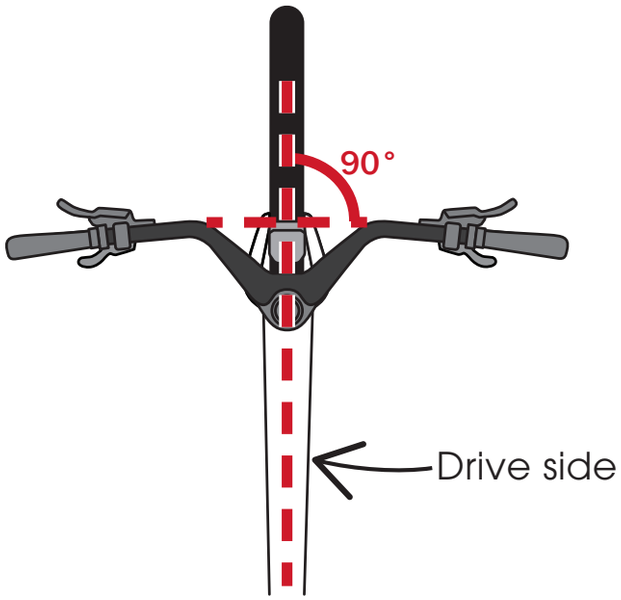

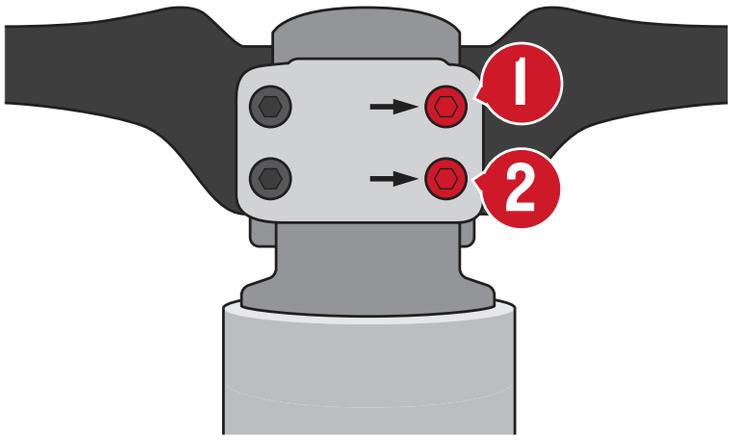

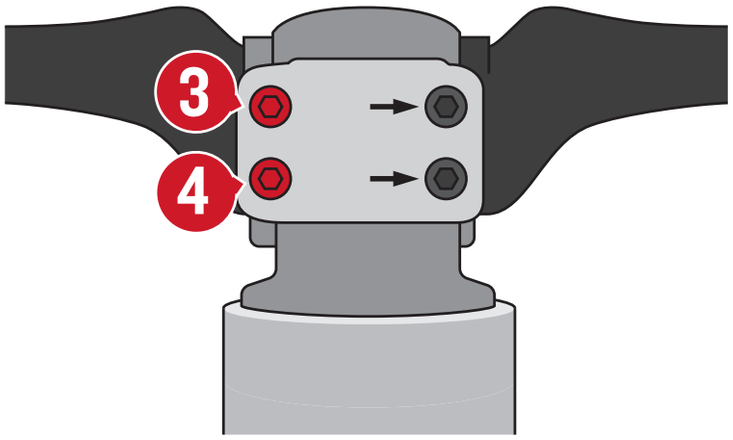

8

Connect the cable. Put the Quad Lock® on—starting with the rear notch—then the front notches. Make sure the light is properly aligned. Install the washer, charger, and tighten the fastener.

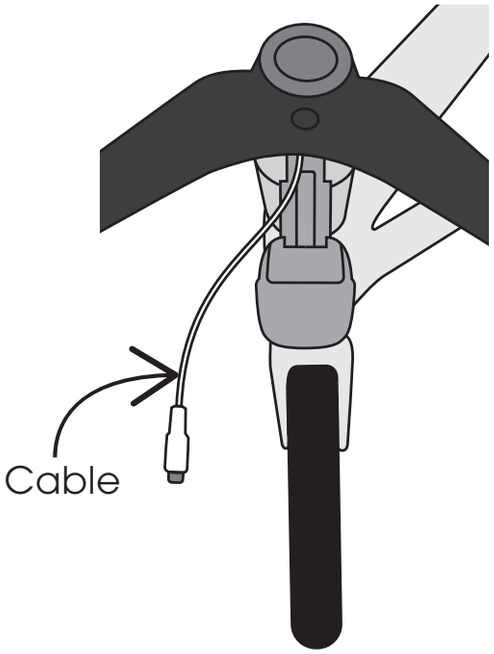

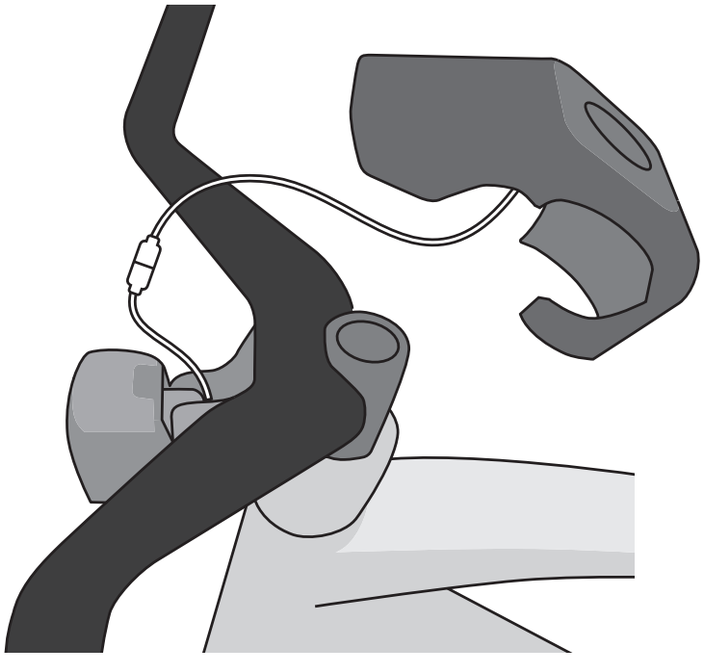

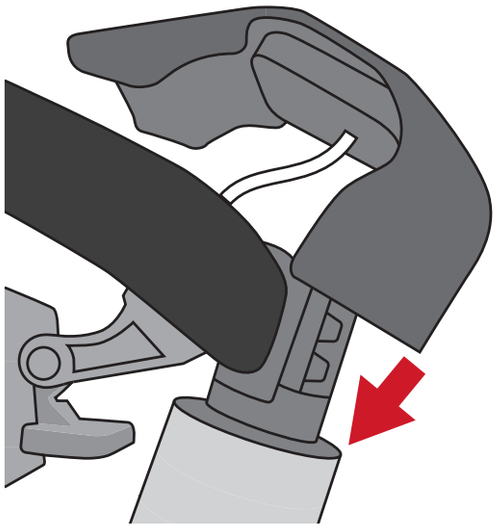

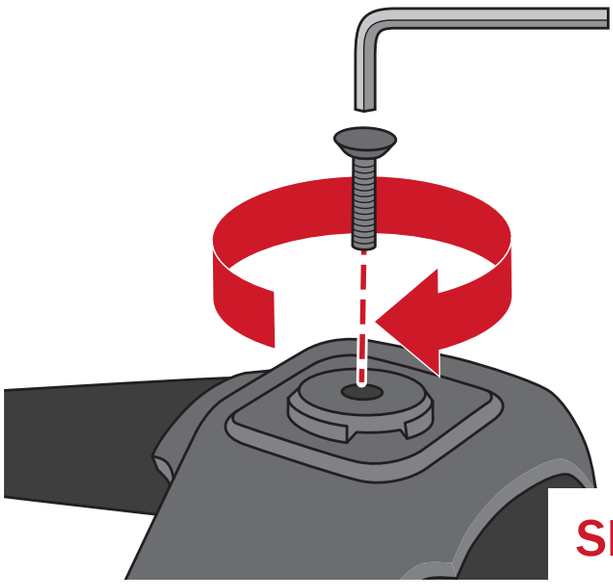

Skip to step 14

9 Attach and align the handlebar. Do not fully tighten the bolts (you will adjust the handlebar and tighten the bolts later).

It's okay to let the handlebar hang by the cables for a short time.

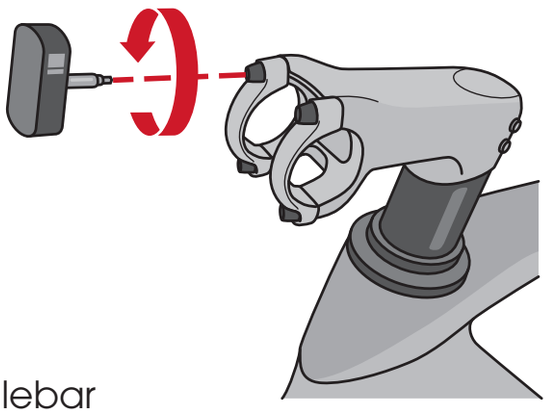

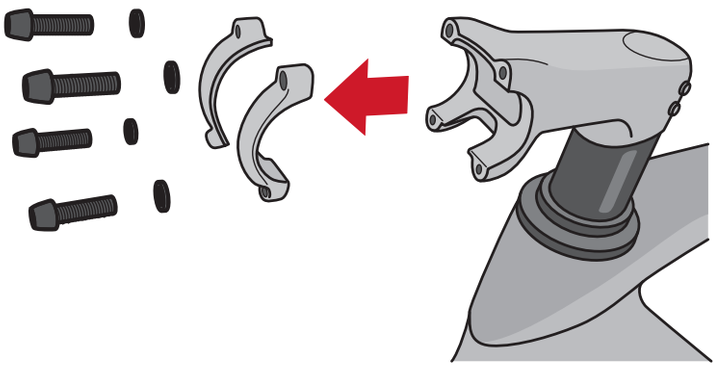

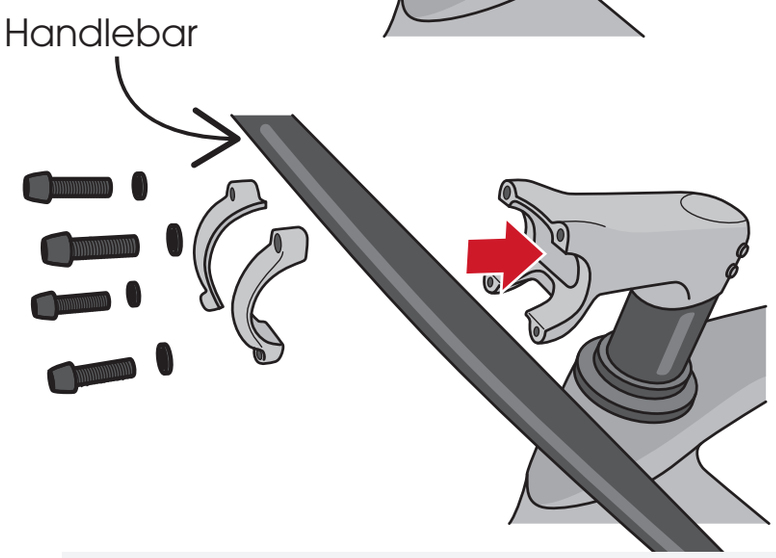

Make sure the cables are not pinched, routed over the stem, or between the faceplates and stem.

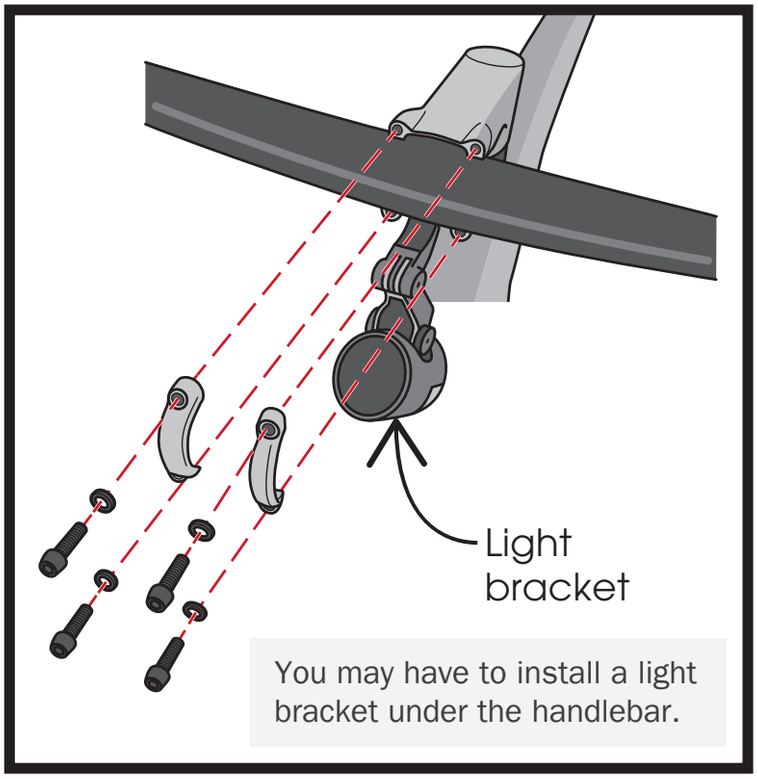

You may have to install a light bracket under the handlebar.

10

Center the handlebar on the stem, fasten the bolts in an X-pattern, but don’t fully tighten them yet.

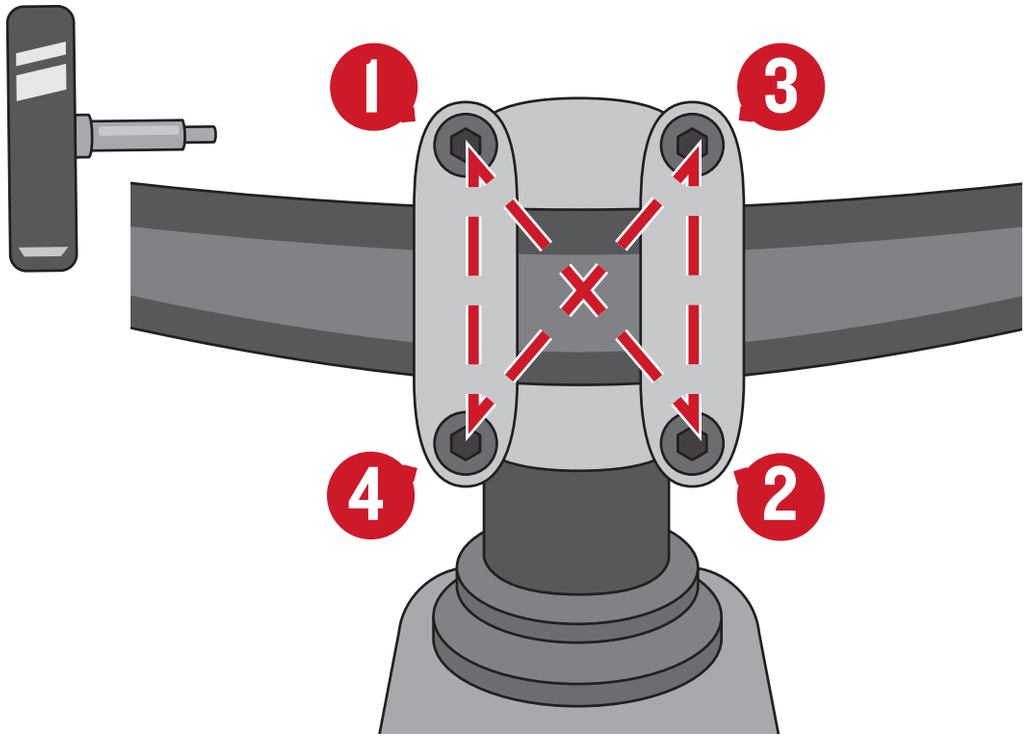

11 If your faceplate installs above the handlebar, follow steps 11 and 12. Use the marks on the faceplate and handlebar to align. Tighten the back two fasteners first.

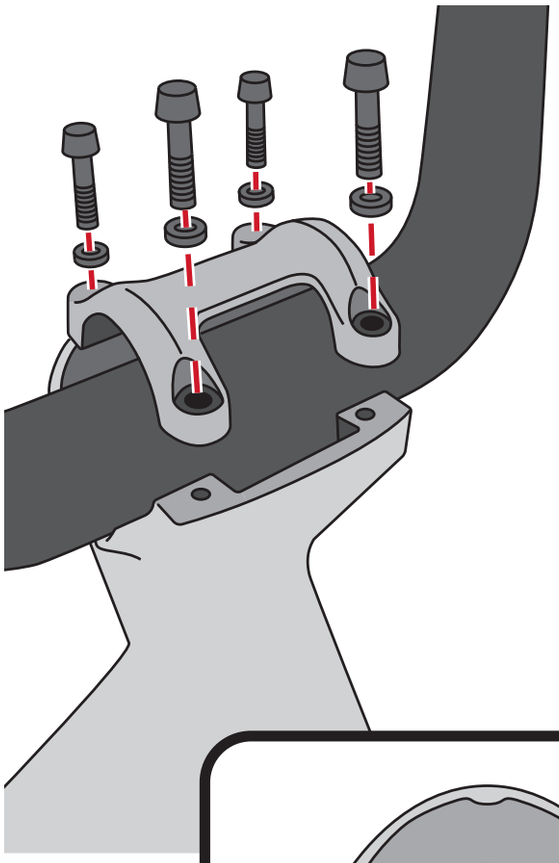

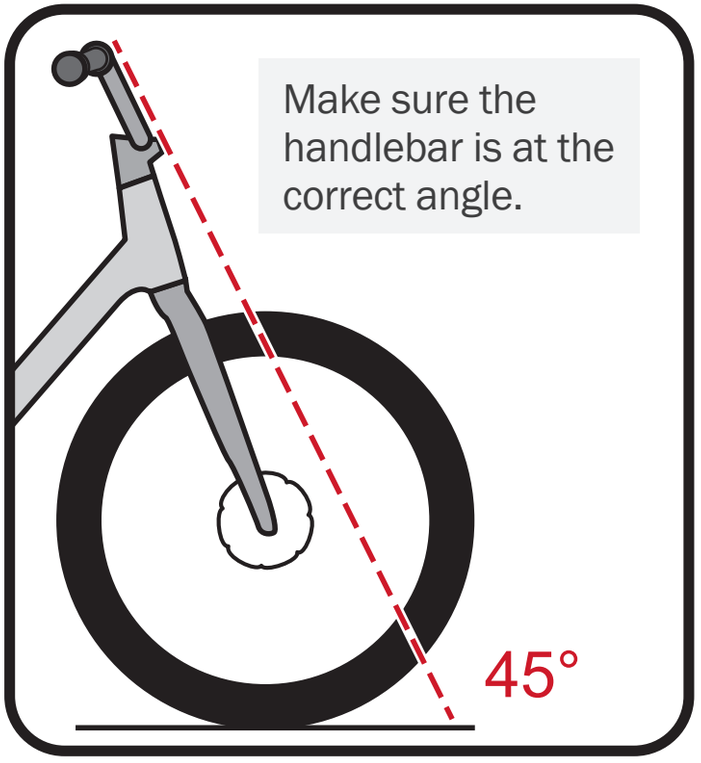

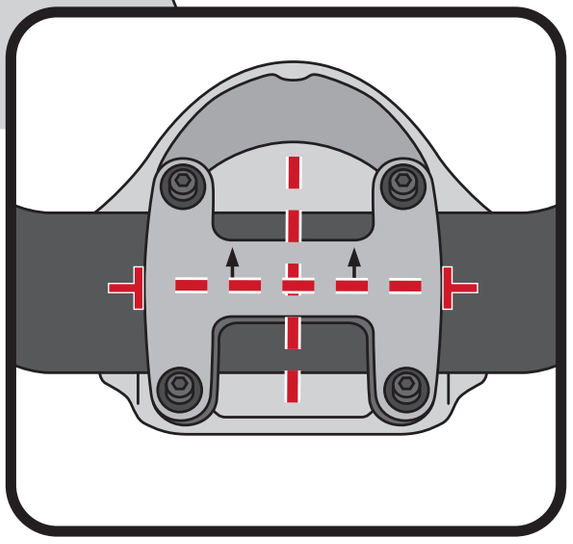

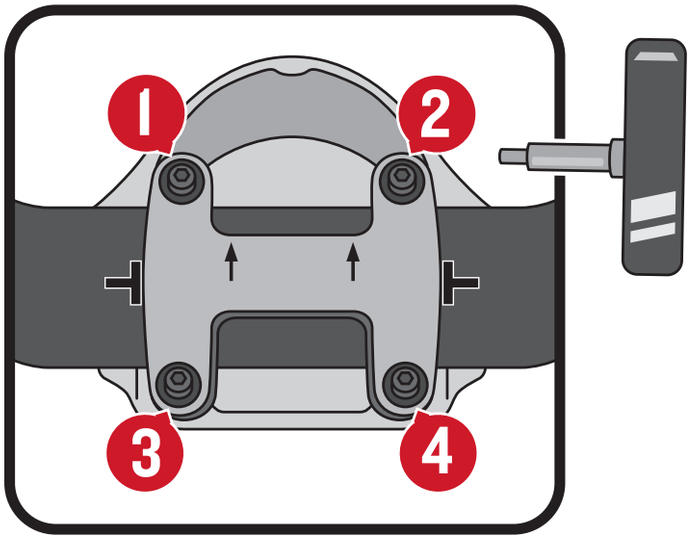

12 Install the stem cover (if included). The cables go through the holes on the side. Use the plugs to secure it.

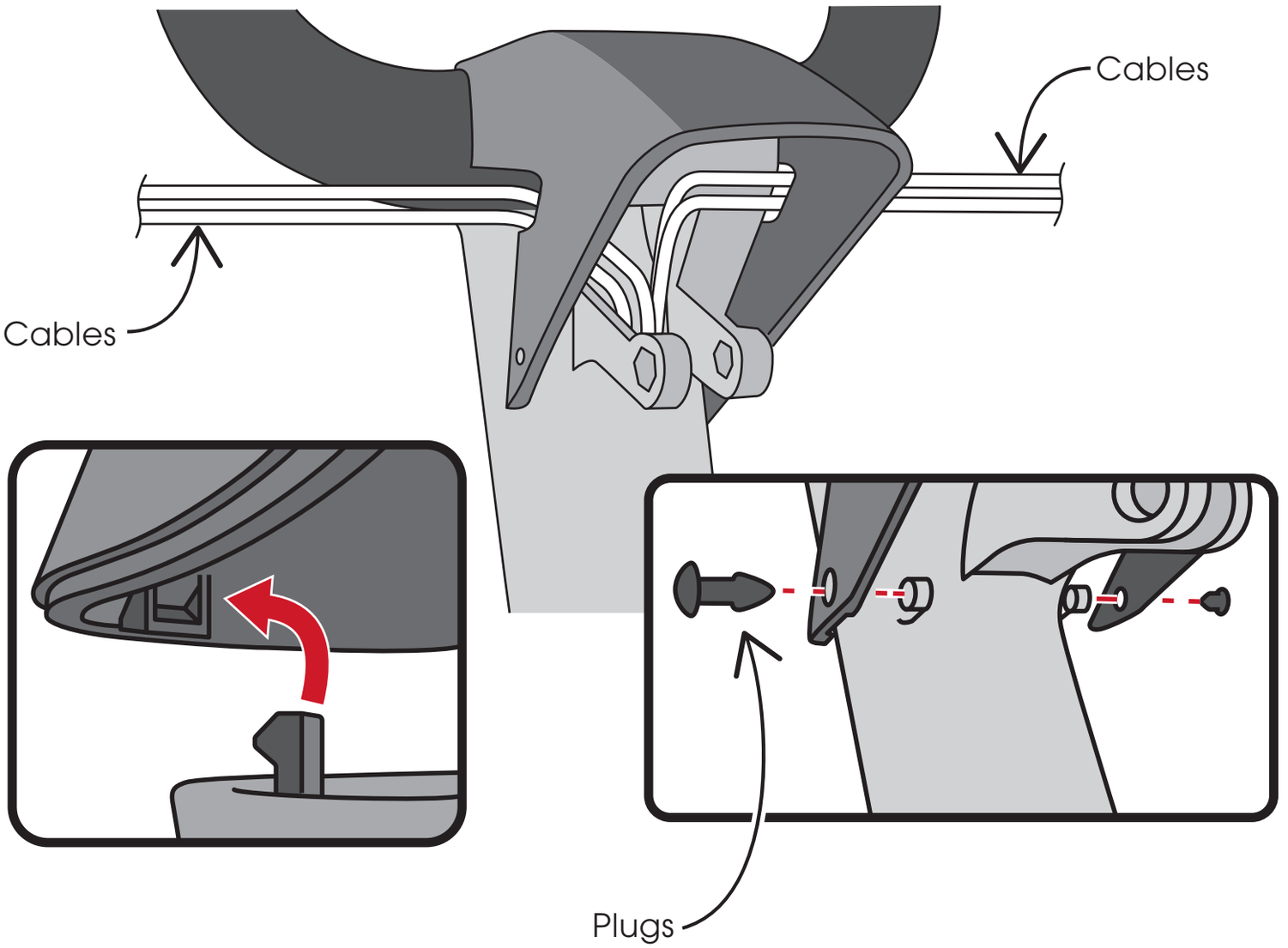

Skip to step 14

13 Remove the cardboard and install the quill stem into the head tube and tighten the bolt.

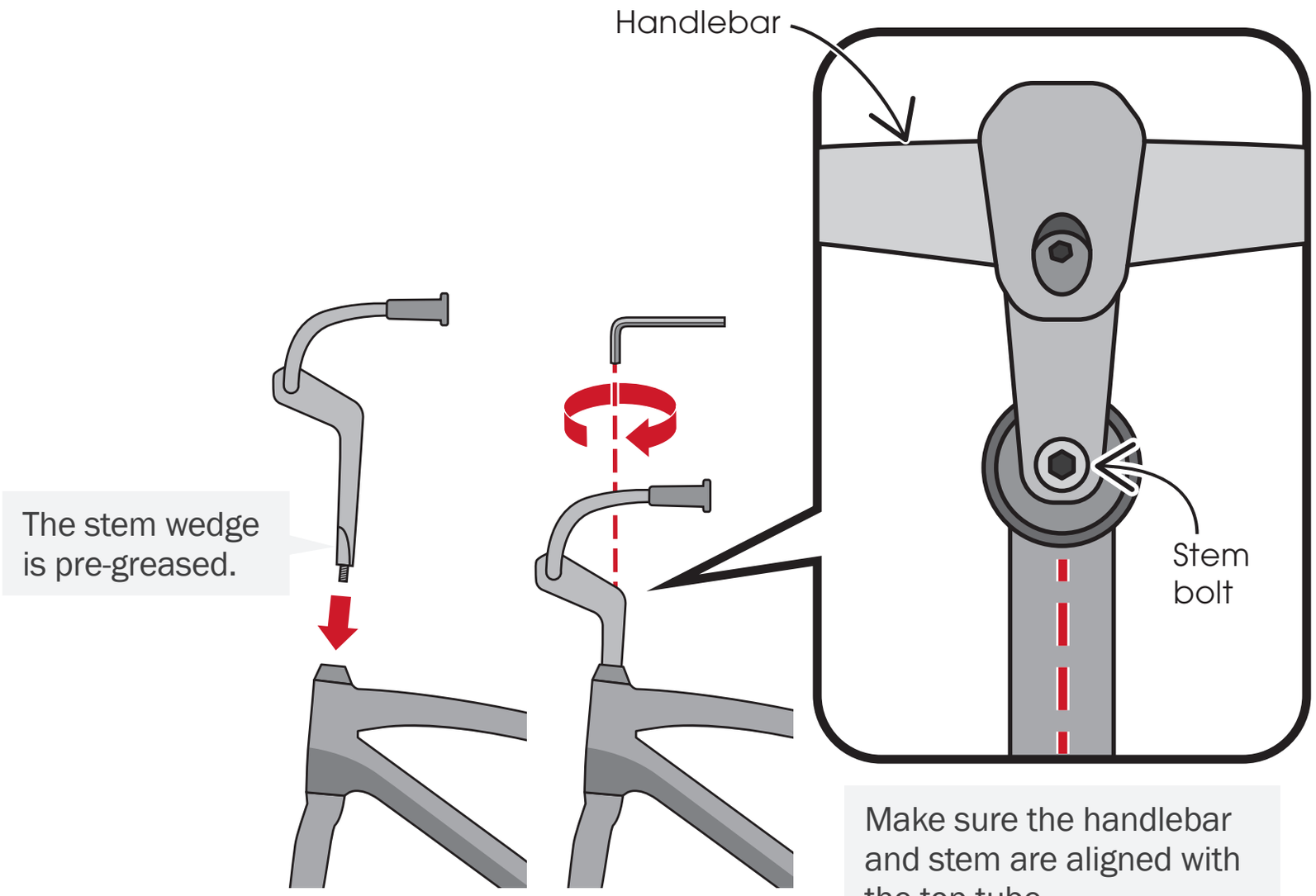

The stem wedge is pre-greased.

Make sure the handlebar and stem are aligned with the top tube.

EN

14 Do you need to install the front fender?

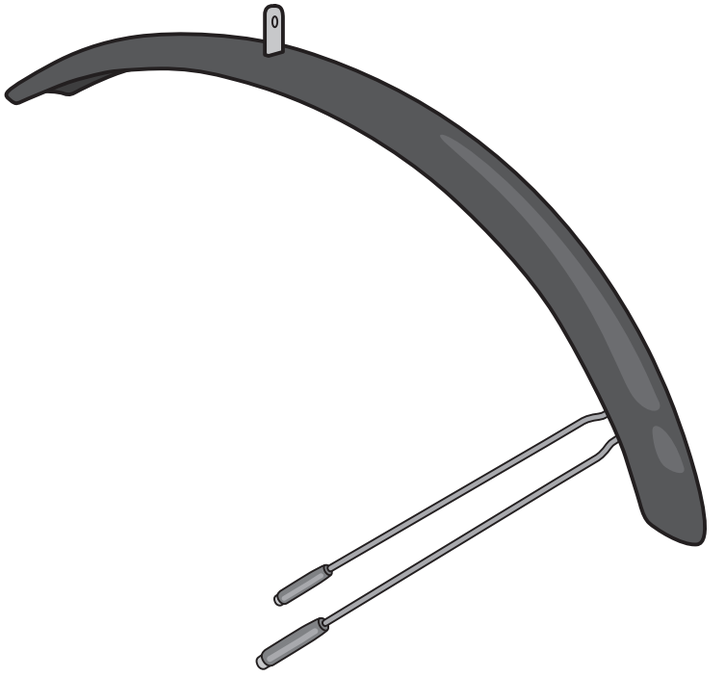

Yes

Go to step 15

No

Skip to step 17

15

Before removing the fender hardware, take a picture to help you remember how to reassemble. The fender connections will replace the fender tags.

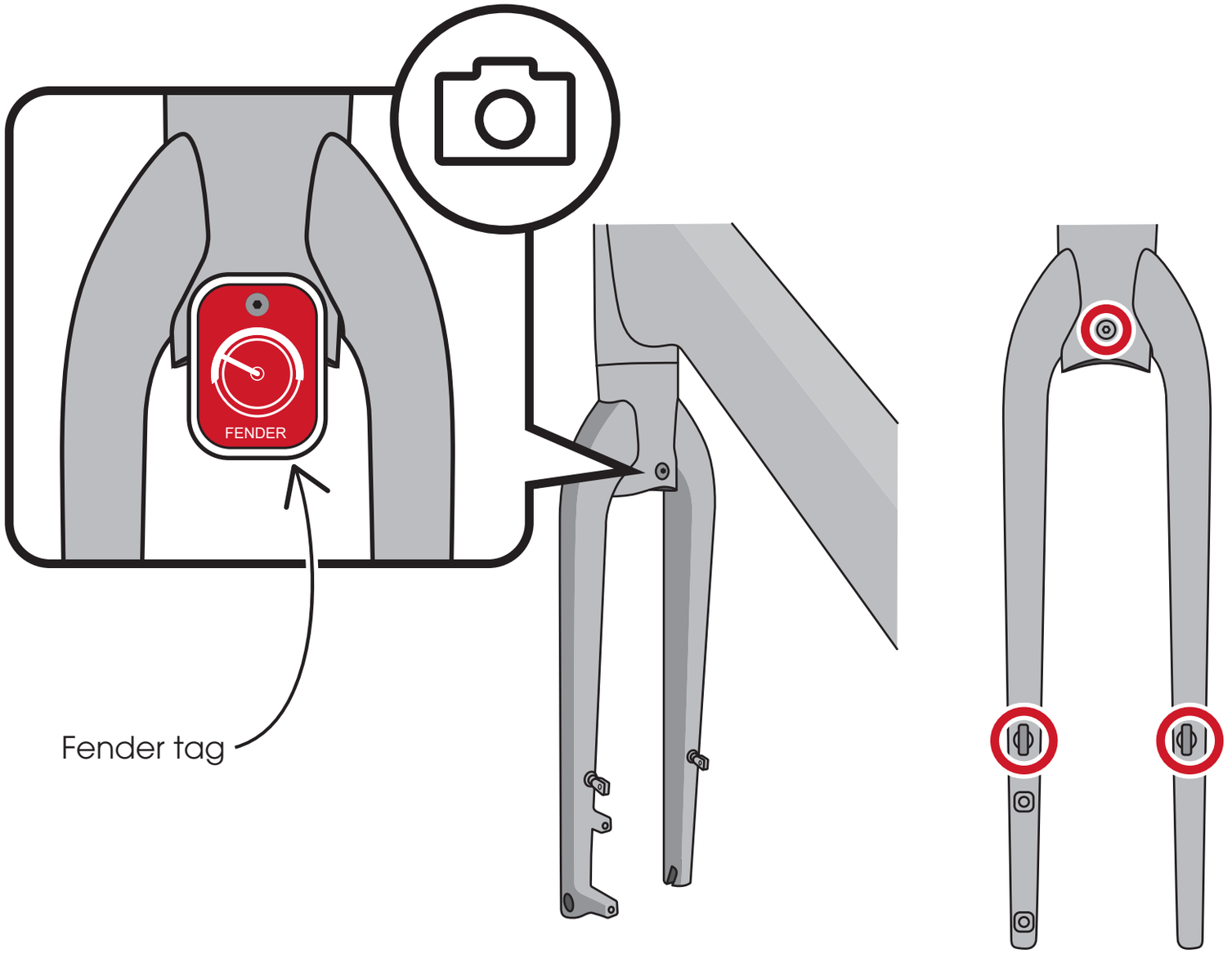

16 Attach the fender connections in place of the tag locations. Fully tighten all bolts.

⚠ WARNING: Only use Trek hardware. Install the fender using all of the fasteners supplied with your bike and in the same position. Do not use alternate/unauthorized fasteners.

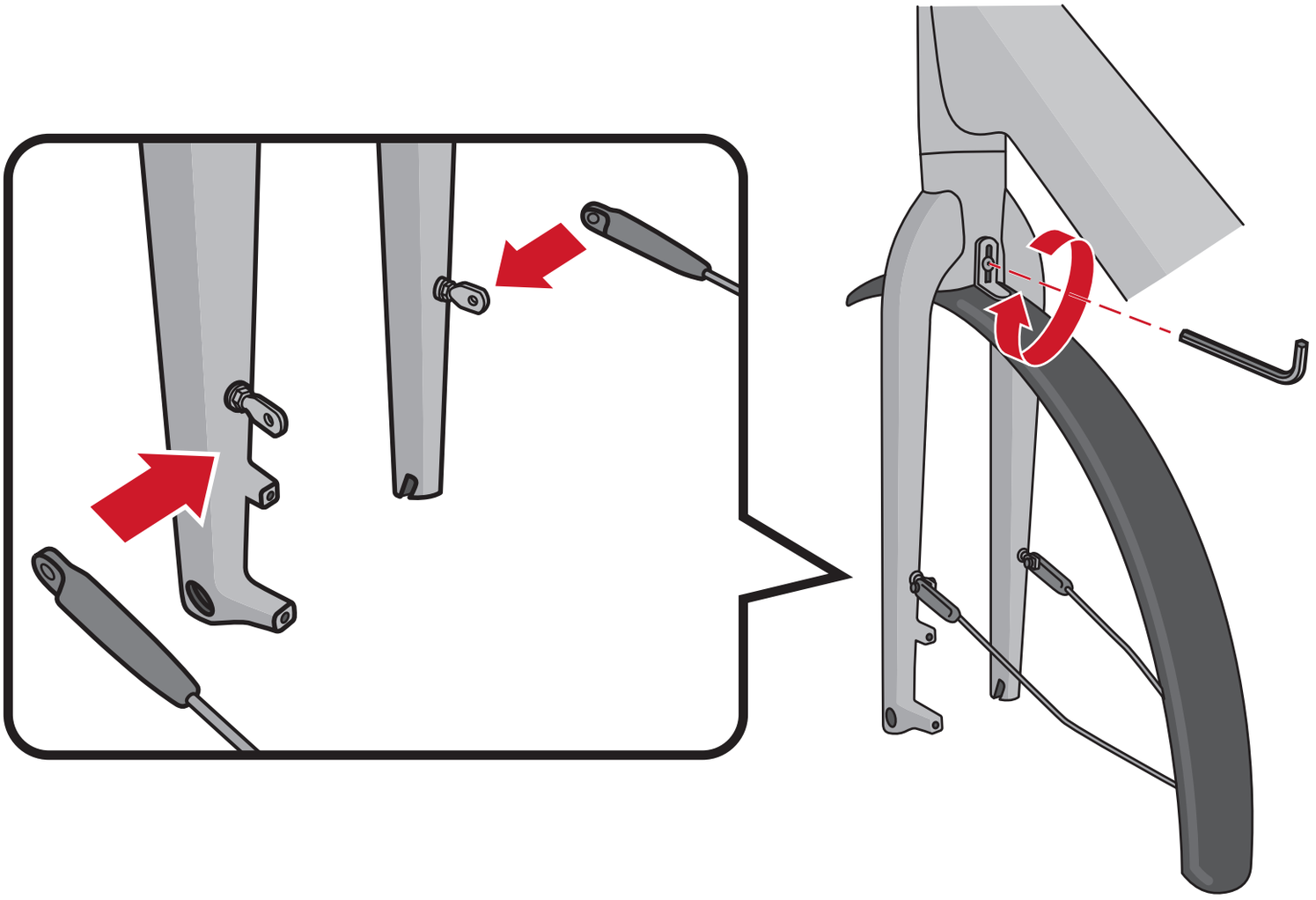

17 Remove the brake pad spacer.

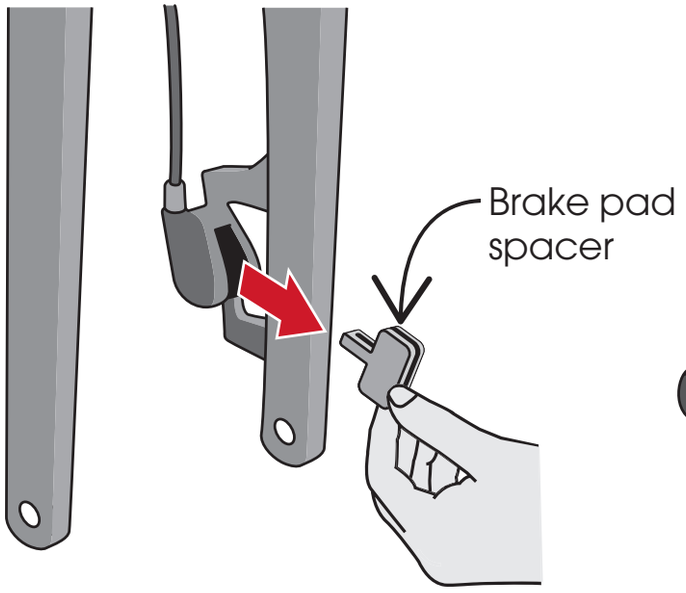

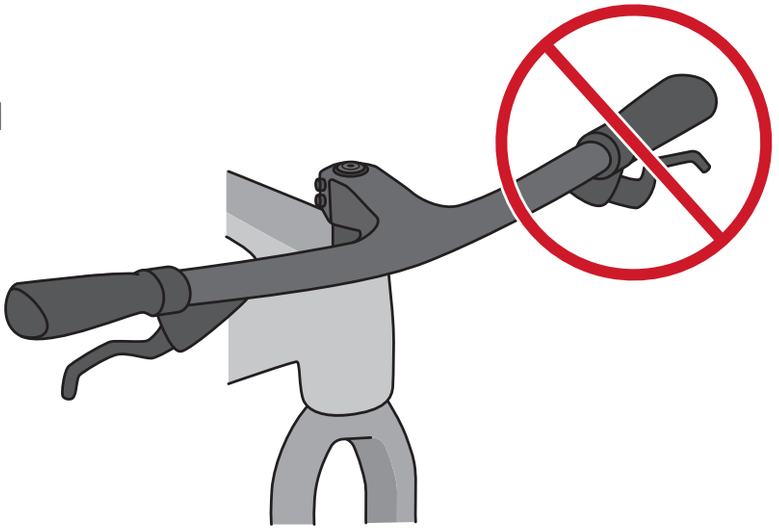

Do not squeeze the brakes after removing the pad spacer. This can close the brake pads and make it difficult to reopen them.

18 Remove the axle from the fork mount and remove the fork mount (remember which side you removed the axle from).

You may need to lean the bike against a wall for stability.

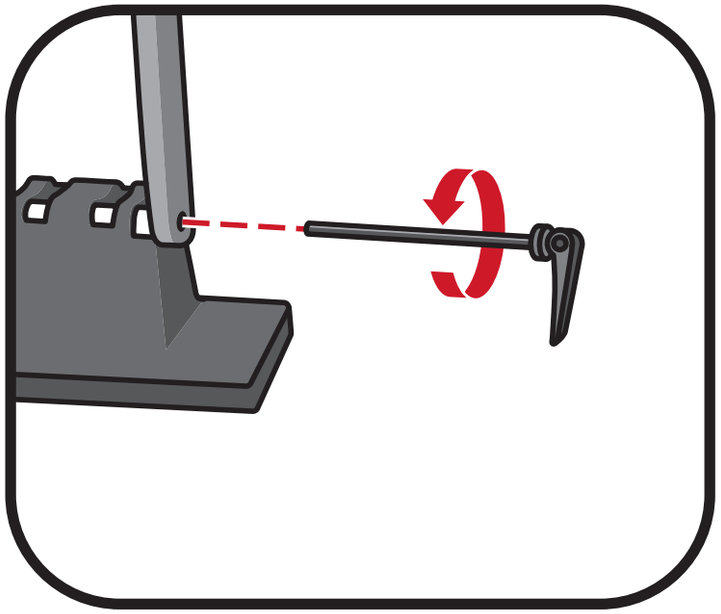

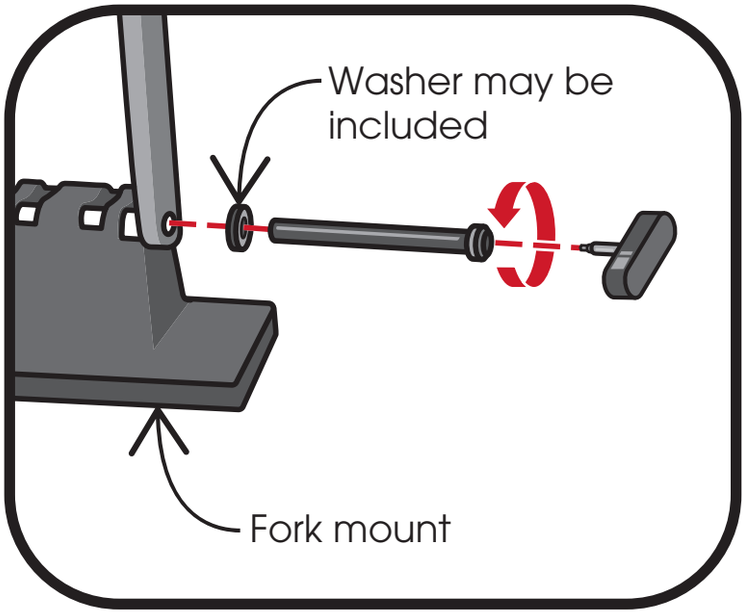

Was your front fork axle secured with a nut?

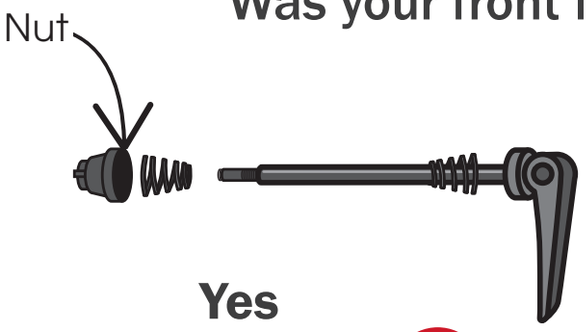

Yes

Skip to step 20



No

Go to step 19

19

Grab the front wheel, lift the bike, and insert the front wheel. Install the axle and tighten until you feel the tool click or the lever leaves a noticeable impression in the palm of your hand.

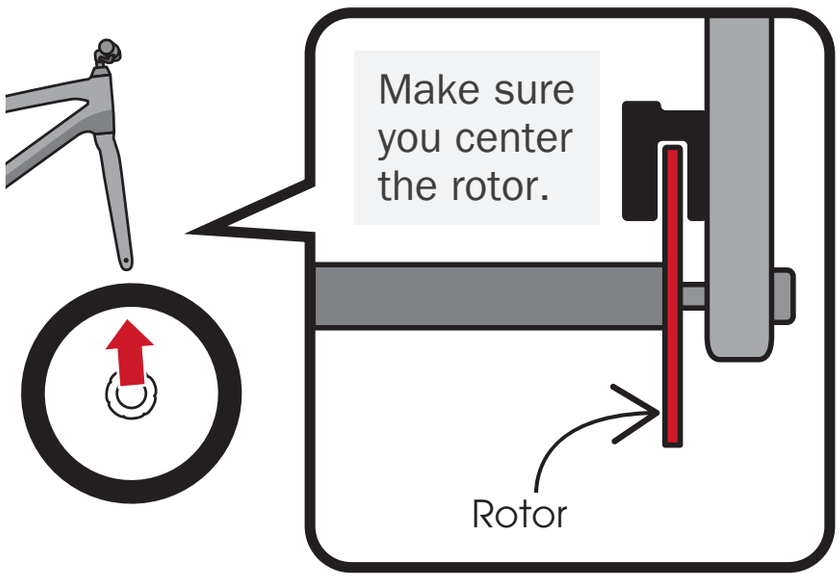

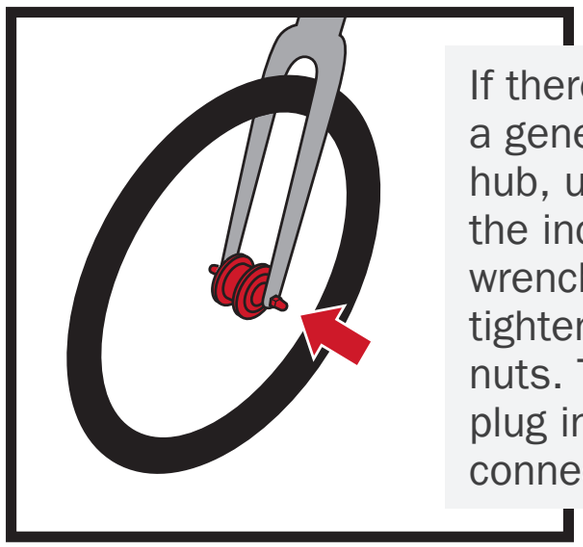

If there is a generator hub, use the included wrench to tighten both nuts. Then plug in the connector.

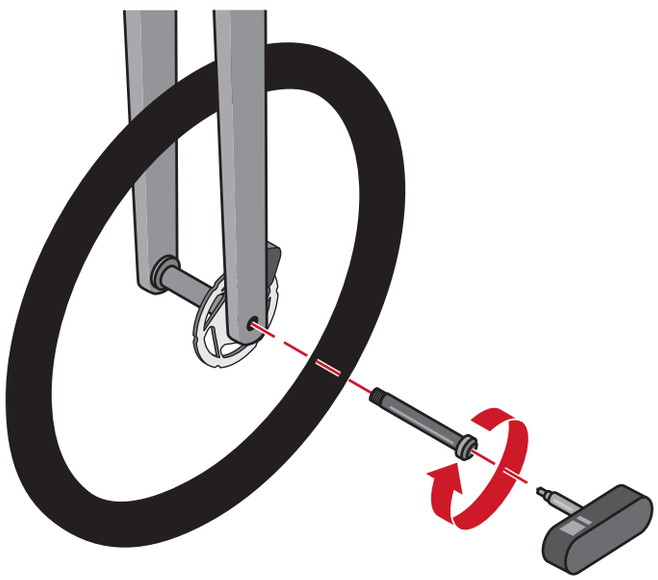

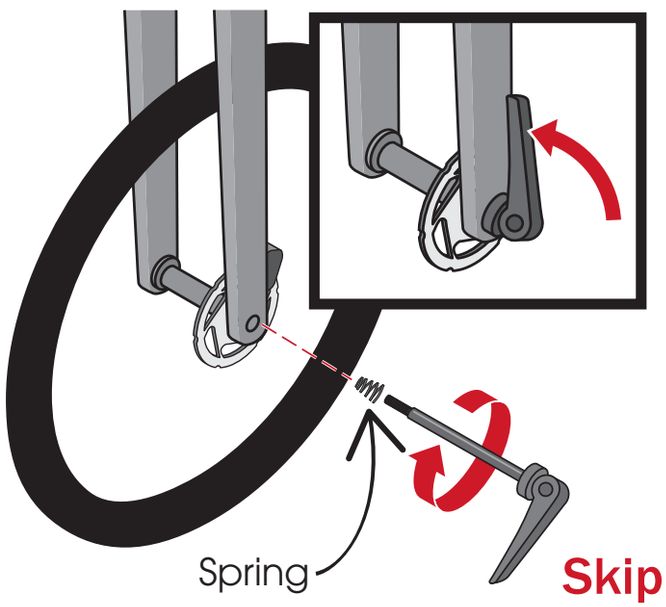

Skip to step 22

20 Grab the front wheel, lift the bike, and insert the front wheel. Then install the skewer axle. Hold the lever at about 5 o'clock and tighten the nut until you feel resistance. Then close the lever with your palm.

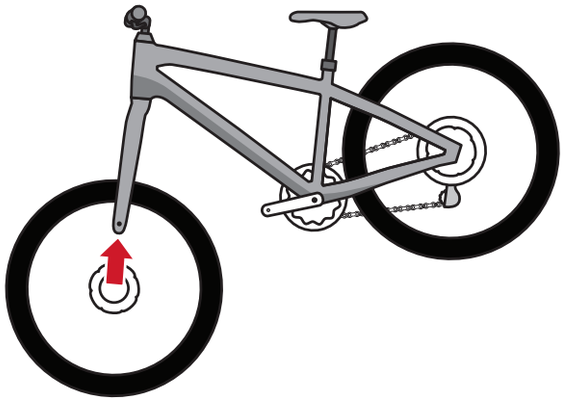

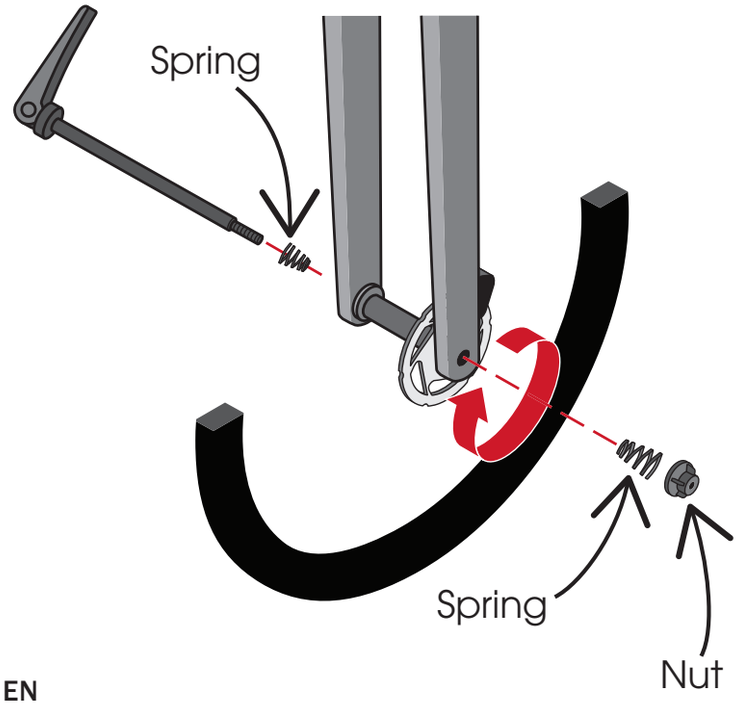

Close lever in front of fork leg.

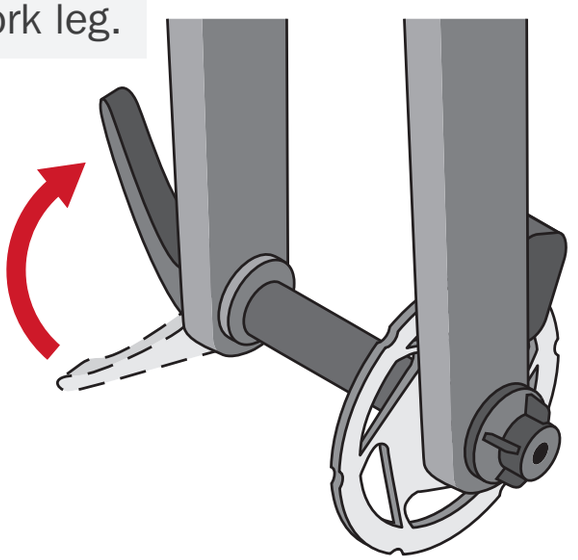

After tightening, the lever should leave a noticeable impression in the palm of your hand.

21

Rim brakes only — squeeze the brake calipers with your hands and connect the front brake cable.

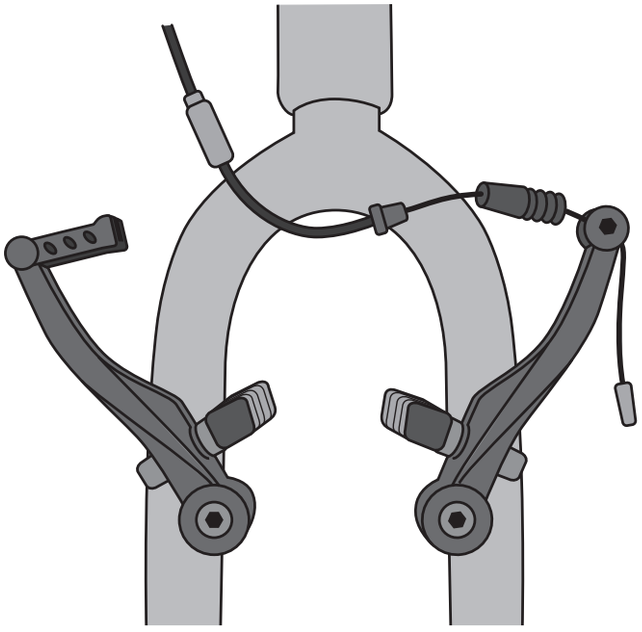

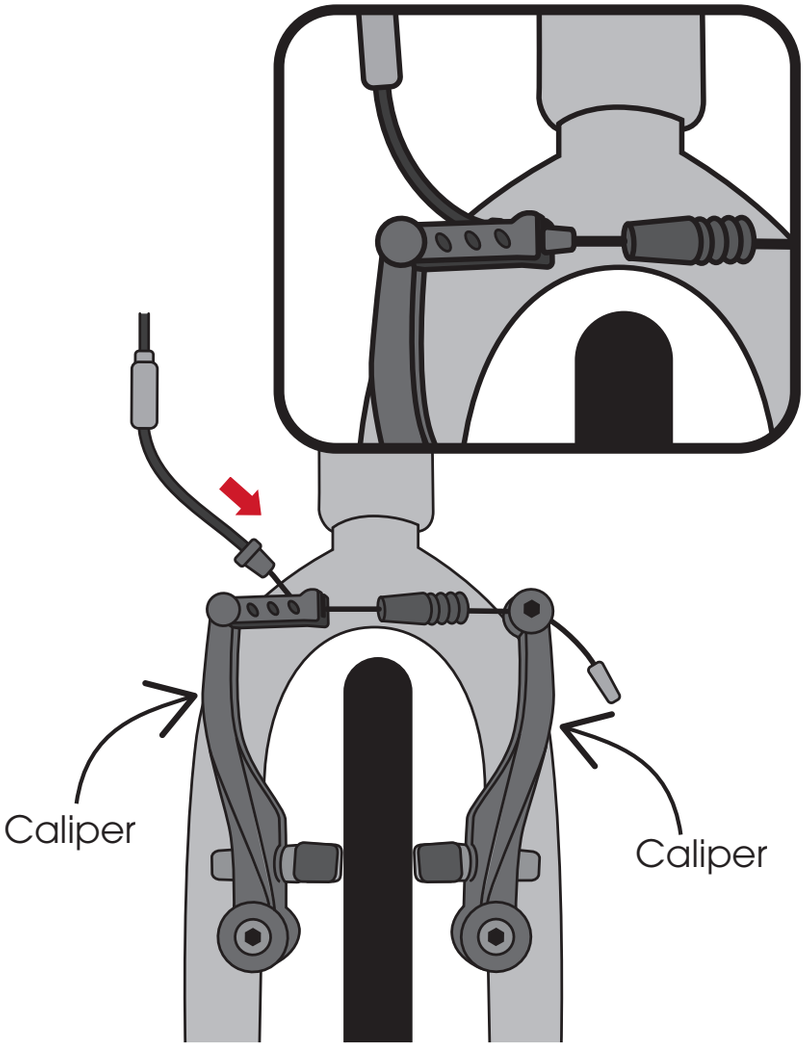

22 Install the pedals. Grease the pedal threads and clean the crank arm threads (there may be residue from the packaging strap). If included, install the washers over the pedal threads first.

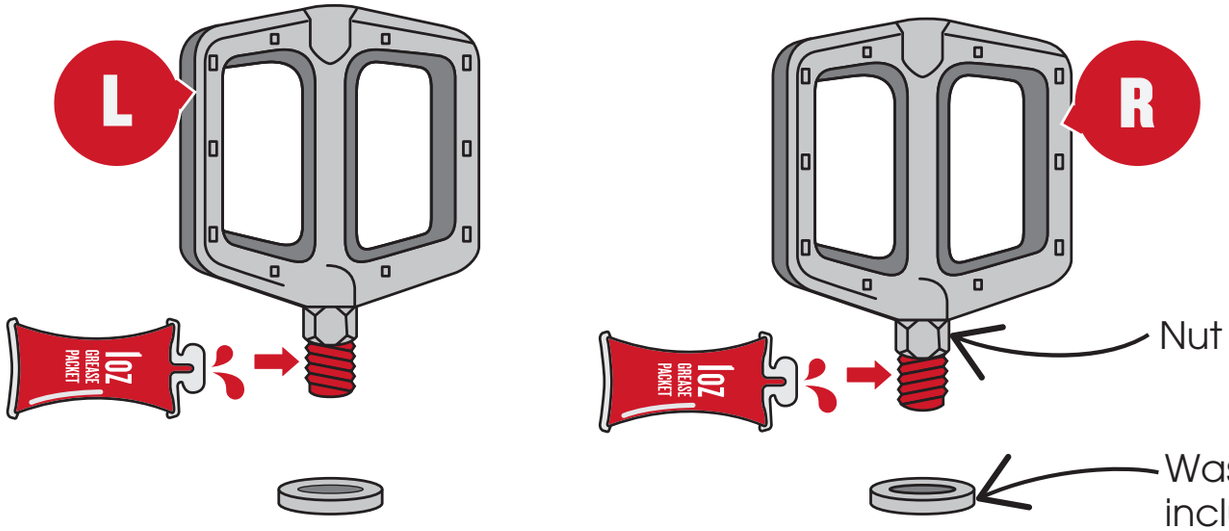

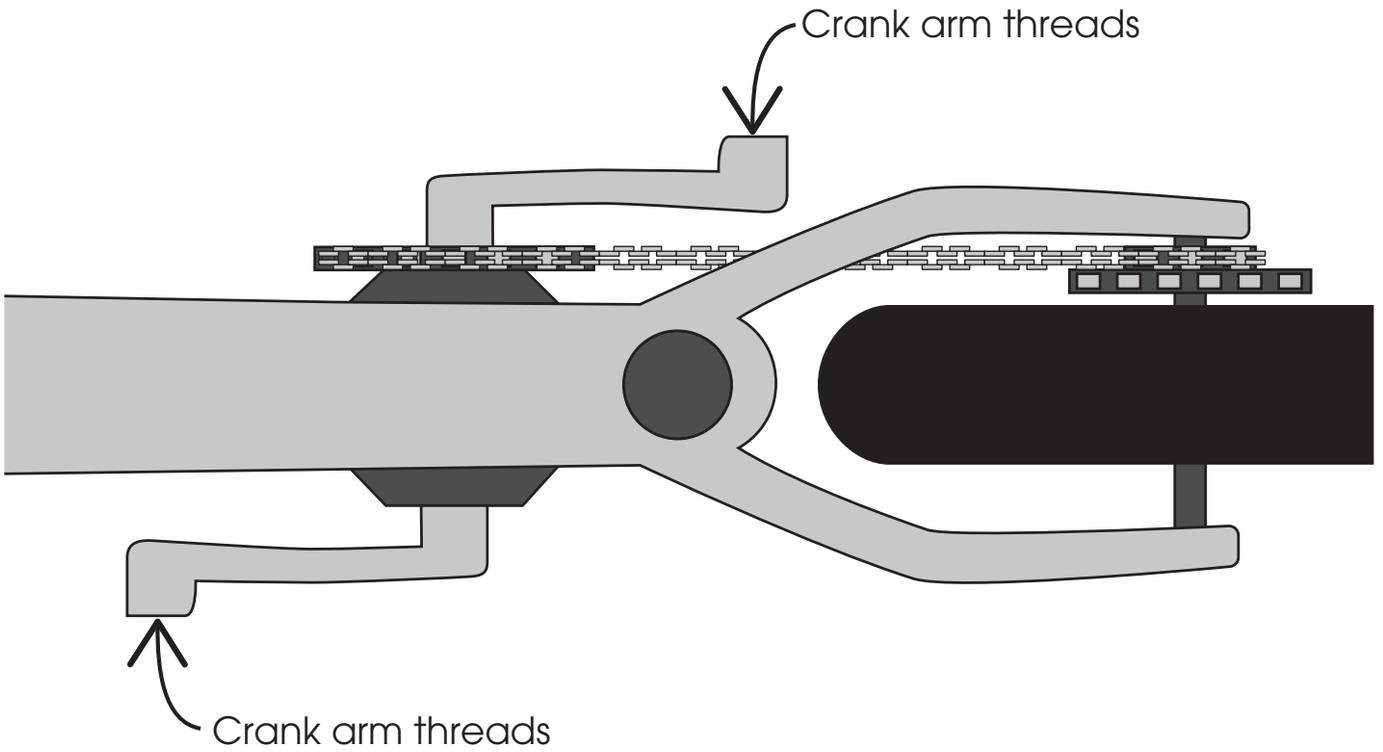

23 Thread the pedals in by hand — tightening by the nut, not the pedal. Then use the pedal wrench to fully tighten the pedals.

After tightening, the tool should leave a noticeable impression in the palm of your hand.

Both pedals tighten towards the front of the bike.

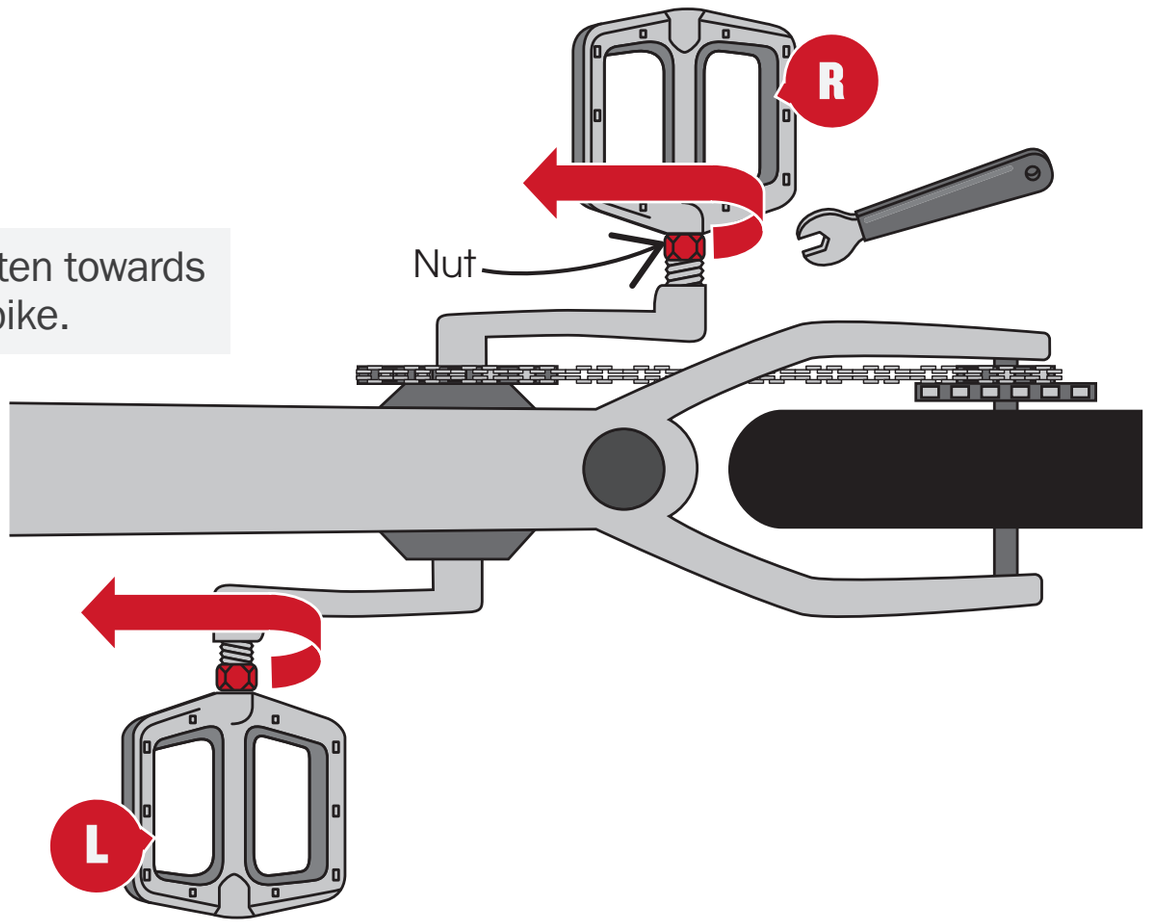

⚠ WARNING: The chainring has sharp points. Be careful when working around the chainring. Failure to do so may result in cut or pinched skin.

24 Your tires were inflated to the maximum pressure at the factory. Check the tire pressure. If necessary, inflate both tires to within the pressure range listed on the tire.

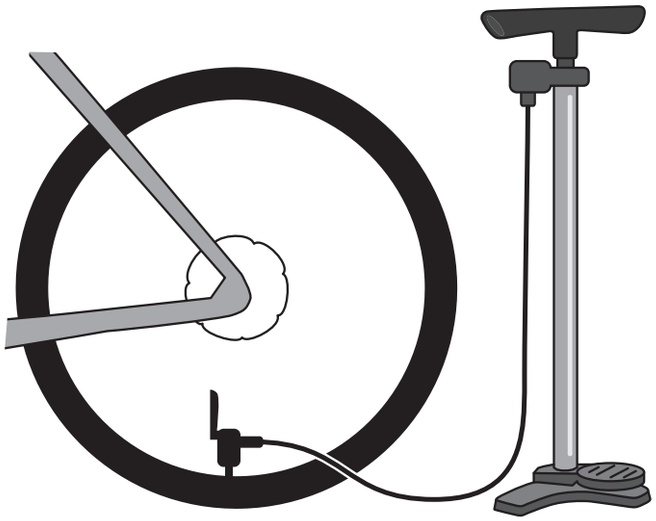

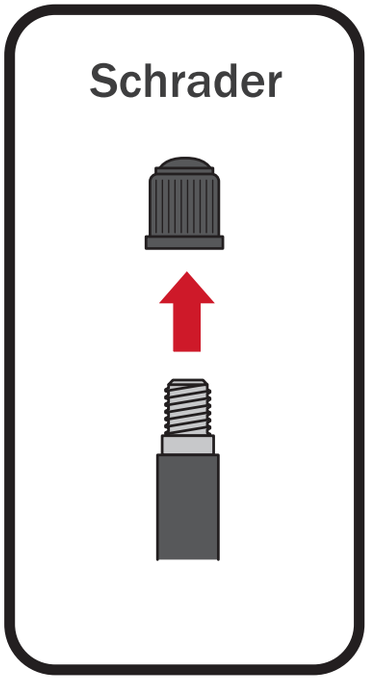

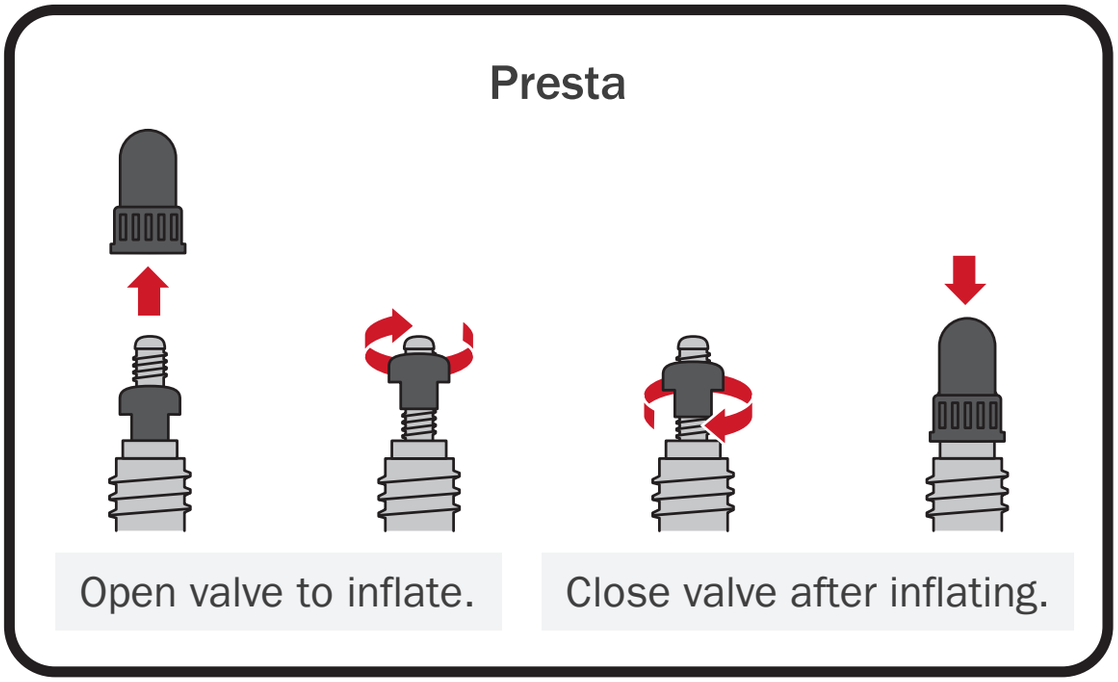

25 **Adjust the seat height to your riding preference. Raise or lower the seatpost as needed and tighten the bolt.**

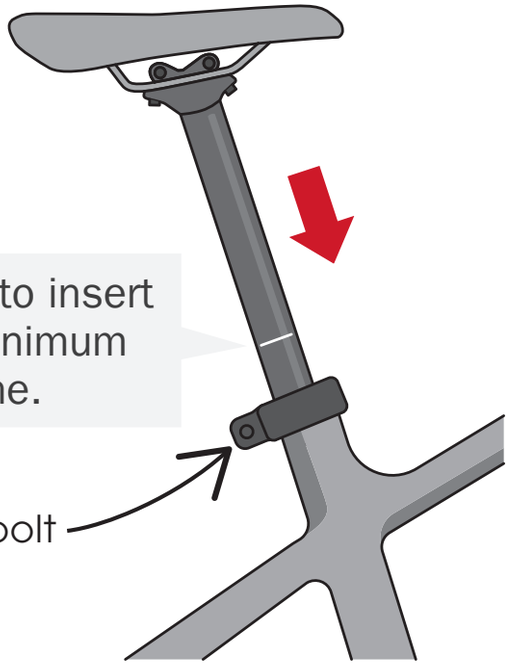



In a normal riding position, your knee should be slightly bent at the bottom of your pedal stroke.

Align the seat with the top tube.

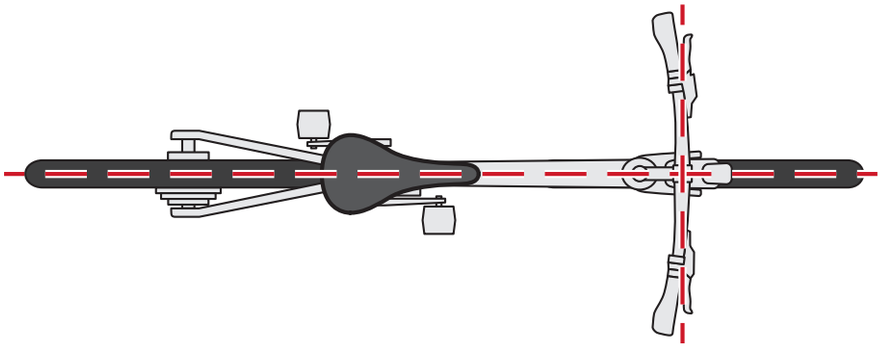

26 Now that the front wheel is on, align the handlebar (you may need to loosen the faceplate bolts).

Center the handlebar between faceplates.

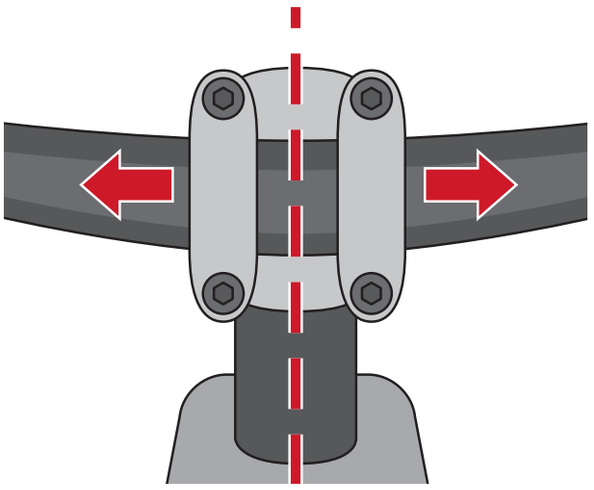

Adjust the handlebar so the levers are about 45° to the ground.

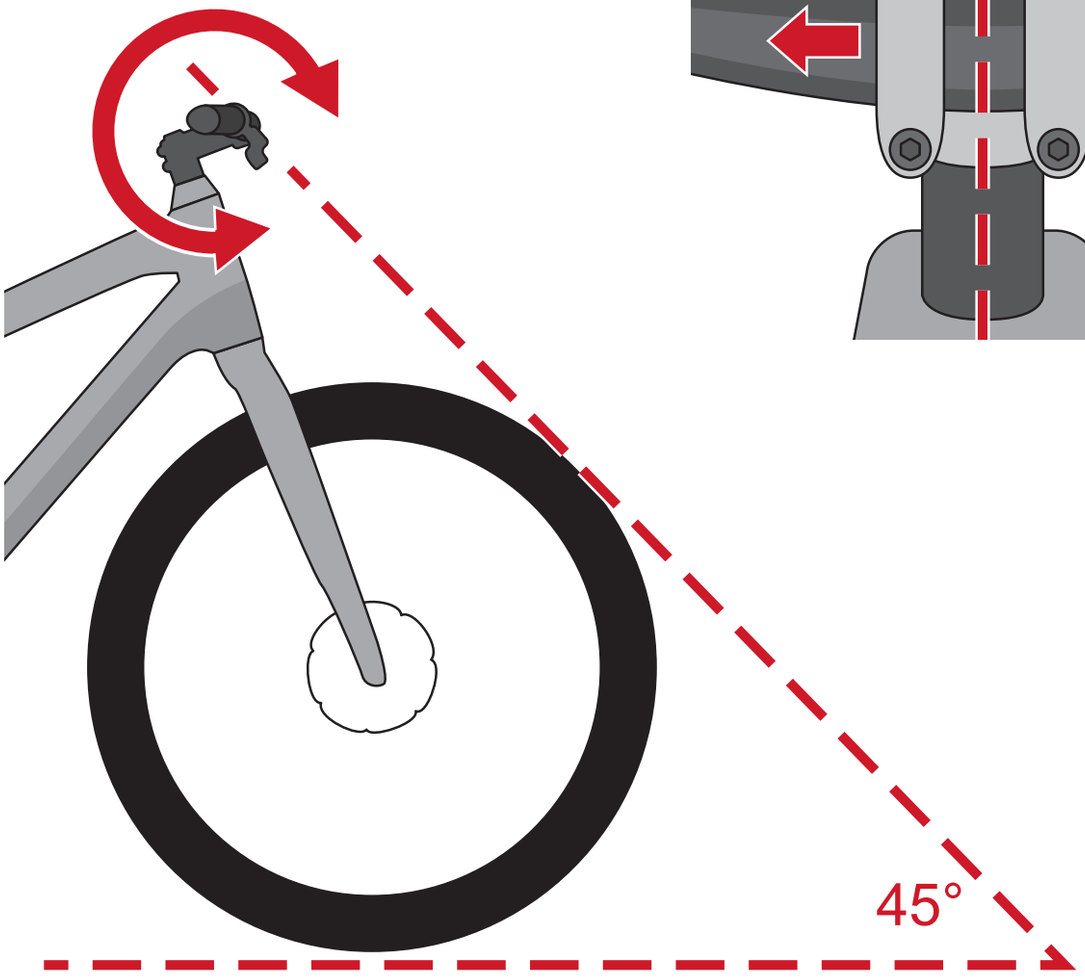

27 Tighten the faceplate bolts one half turn at a time — in an X-pattern — until you hear the tool click.

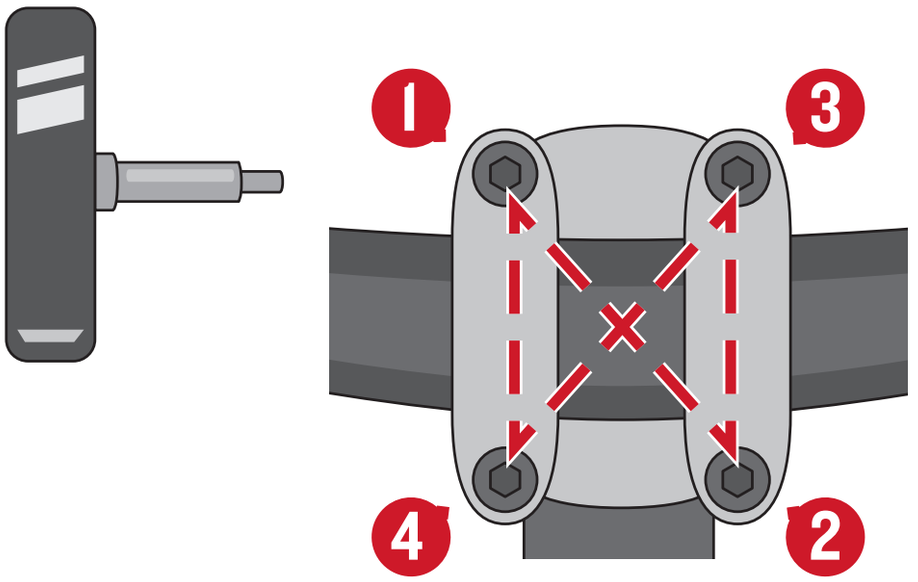

Make sure the gap is equal on the top and bottom. If the spacing is unequal, loosen the bolts and retighten them following the order above.

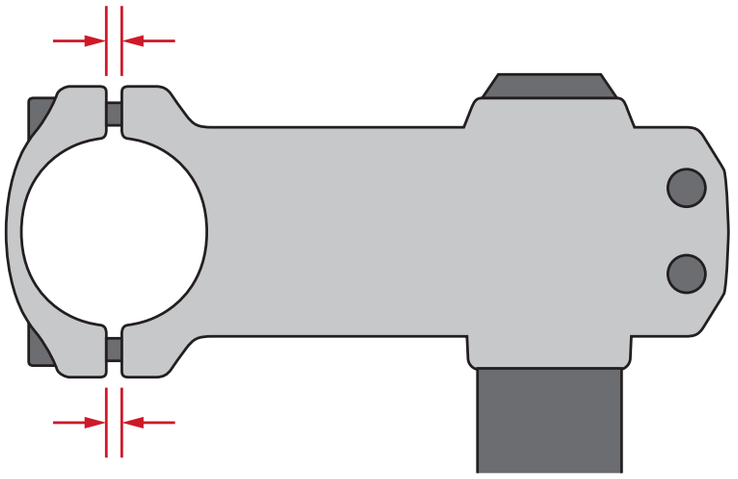

Before and after your first ride, complete this checklist:

- ☐ Front fender installed correctly: if applicable? *(Steps 14-16)*
- ☐ Front wheel installed correctly? *(Steps 17-20)*
- ☐ Pedals installed correctly and tightened? *(Steps 22-23)*
- ☐ Tires inflated to correct pressure? *(Step 24)*
- ☐ Seatpost installed and seat height correct? *(Step 25)*
- ☐ Handlebar and stem properly aligned? *(5/7 & 26)*
- ☐ Faceplate bolts properly tightened? *(Steps 7/11 & 27)*
- ☐ Read the Trek Owner's Manual (included with your bike).
- ☐ Register your bicycle.
- ☐ Perform a pre-ride check.

For more detailed information, see the service manual on Trekbikes.com > click on your bike > Service > Service manual.

Register your bike at trekbikes.com/productRegistration/

Watch the Pre-Ride Check video on the Trek Bicycle YouTube channel.

WARRANTY: For information about your bike's warranty, please see trekbikes.com/inside_trek/warrantied_for_life.

QUESTIONS? Please contact your local Trek bike shop, call Trek Customer Care at 1-800-585-8735 from 10am – 6pm Monday – Friday CST, or chat with us at trekbikes.com/contactus.

RIDE BIKES
HAVE FUN
FEEL GOOD

TREK

PN 5327032