

CHECKPOINT ALR GEN 3

SERVICE MANUAL

Contents

Routing


Routing — mechanical

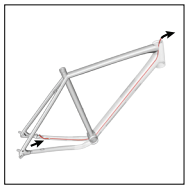
Routing — mechanical: instructions


Brake Routing — AXS

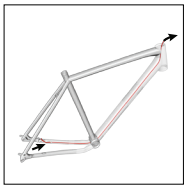
Brake Routing — AXS: instructions


Routing — dropper post cable

Headset


RCS Race


RCS Pro


RCS Universal


RCS Race headset

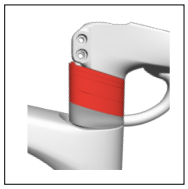
RCS Race spacers

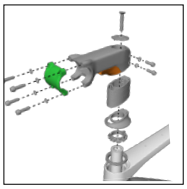
RCS Pro headset

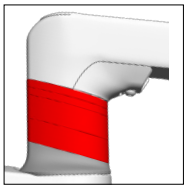
RCS Pro spacers

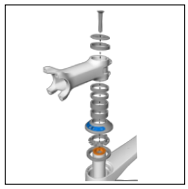
RCS Universal headset

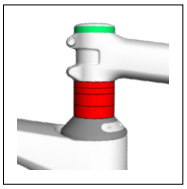
RCS Universal spacers

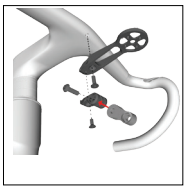
Blendr base

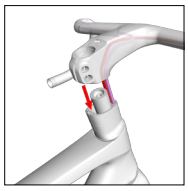
Install the RCS Race

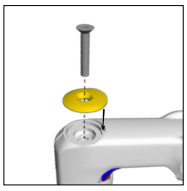
Install the RCS Pro

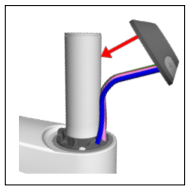
Install the RCS Universal

Frame


Frame guards

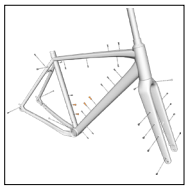
Frame mounts

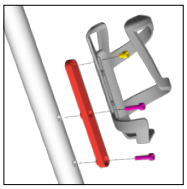
Bottle cage adapters

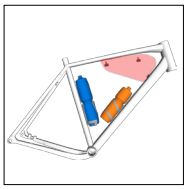
Triangle bag

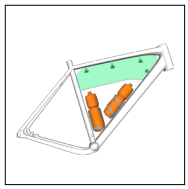
Adventure bag

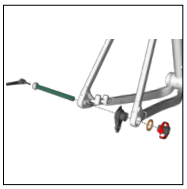
Universal derailleur hanger (UDH) and axles

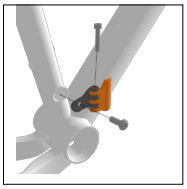
Chainkeeper

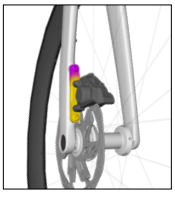
Front brake mount adapter


Specifications

Copyright 2025 Trek Bicycle Corporation All Rights Reserved

About this manual

Scope

This manual contains parts diagrams, specifications (such as grease and torque values), instructions, part numbers, and helpful tips. It does not contain instructions for all components (such as brake calipers). Refer to the original manufacturer for more information.

Replacement parts

Trek recommends using only Trek OEM (original manufacturer) replacement parts.

Additional info

The Owner's Manual is available at Trekbikes.com/manuals.

Inspect the bike

Please inspect the bicycle carefully after removal from the box and all packaging:

- Inspect all surfaces of the bicycle for damage, pay special attention to the fork legs and the seat stays (both inside and outside surfaces).
- If packaging damage is located near the front of the bicycle, remove the fork from the frame and inspect the steerer tube for damage.

Legend


Cable (zip) tie

Nm Torque value

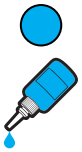
Apply appropriate threadlocker


Apply Bontrager grease

Safety

WARNING

Properly tighten hardware

Always tighten hardware to the specified torque. Over-tightening hardware could deform or break the hardware or components. Under-tightening or over-tightening hardware could cause hardware or components to become loose. Either situation could damage the bicycle and result in injury to the rider.

WARNING

Reapply threadlocker

All reused-fasteners with pre-applied threadlocker must be cleaned with isopropyl alcohol and have new threadlocker applied before re-assembly. If threadlocker is not applied, the fasteners may loosen which could damage the bicycle and result in injury to the rider.

We value your feedback



We hope you find our service manual useful. To help us improve, please take a brief survey about your experience. We periodically update our manuals and your input ensures we provide the highest quality user experience.

For product help or inquiries:

Please visit trekbikes.com/contactus or call Customer Care.

Routing — mechanical

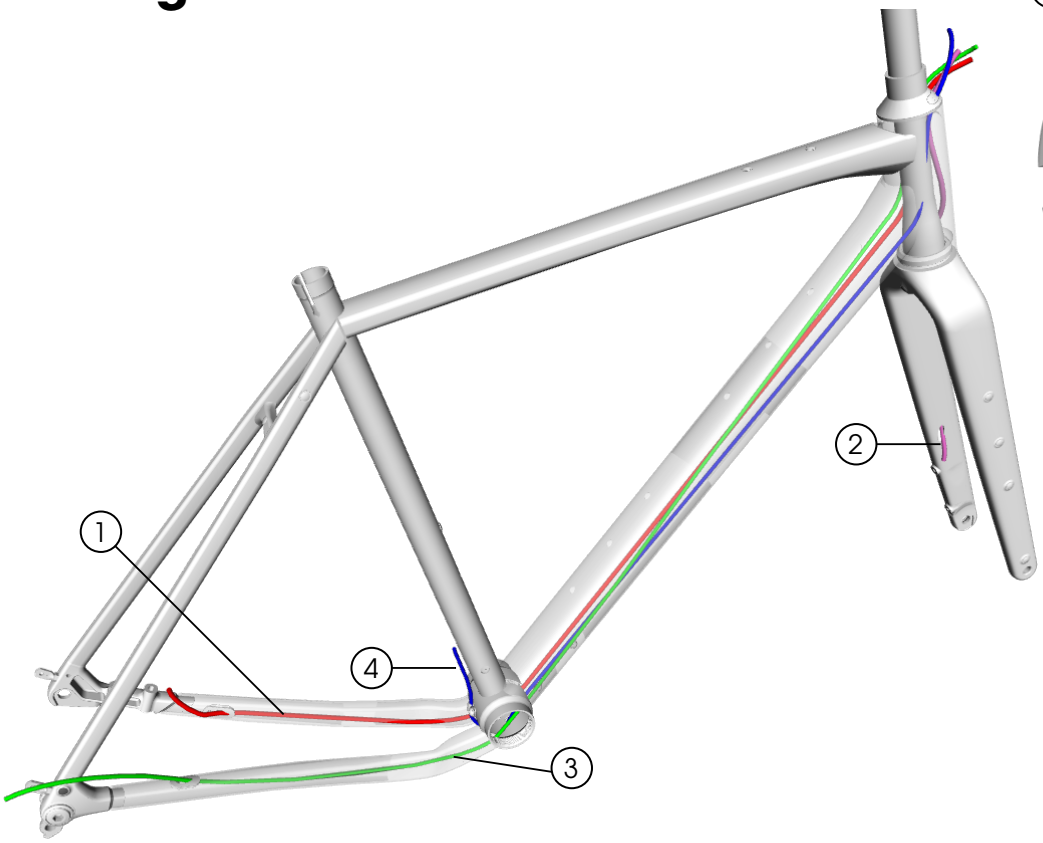

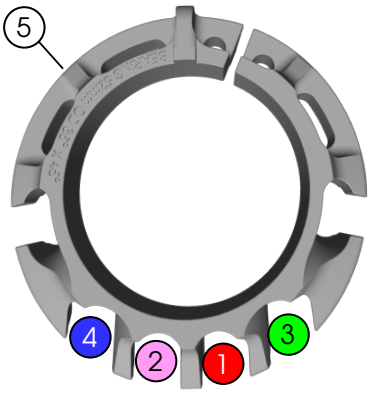

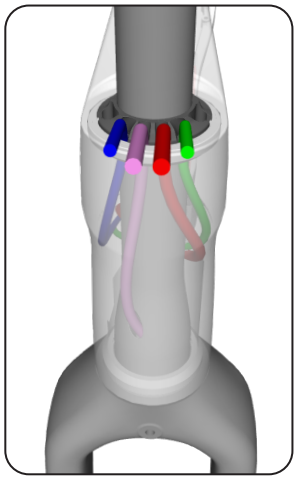

1. Rear brake hose
2. Front brake hose
3. Rear derailleur cable
4. Front derailleur cable
5. Split ring — *W5315339*
6. Cable guide — *W316706*
7. Fastener (M5 x 8 mm) — *W549307*  3
8. Plate — *W5317363*
9. Fastener (M3 x 10 mm) — *W545633*  2.5

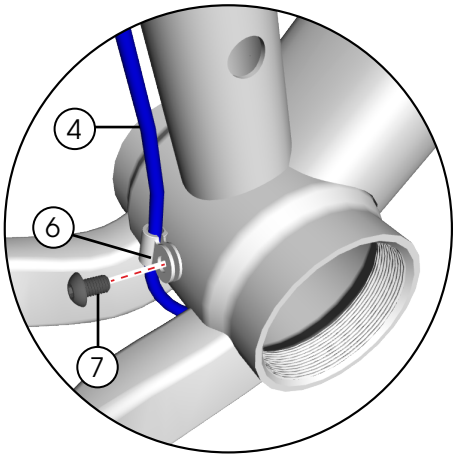

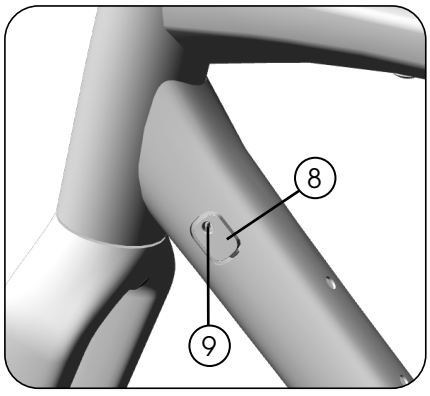

Routing — mechanical: instructions

1.

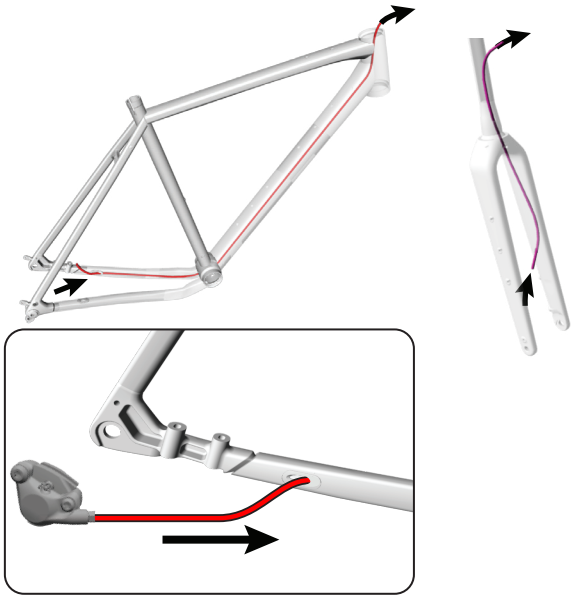

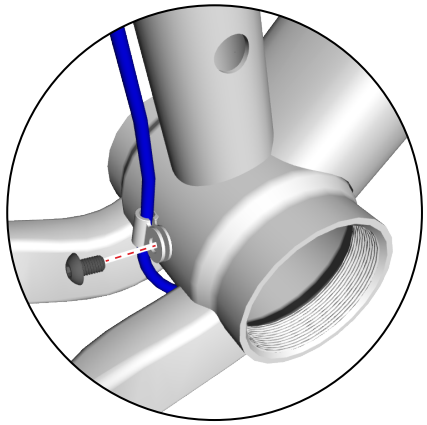

NOTE: For 2x setup, use the cable guide to secure the front derailleur cable.

2.

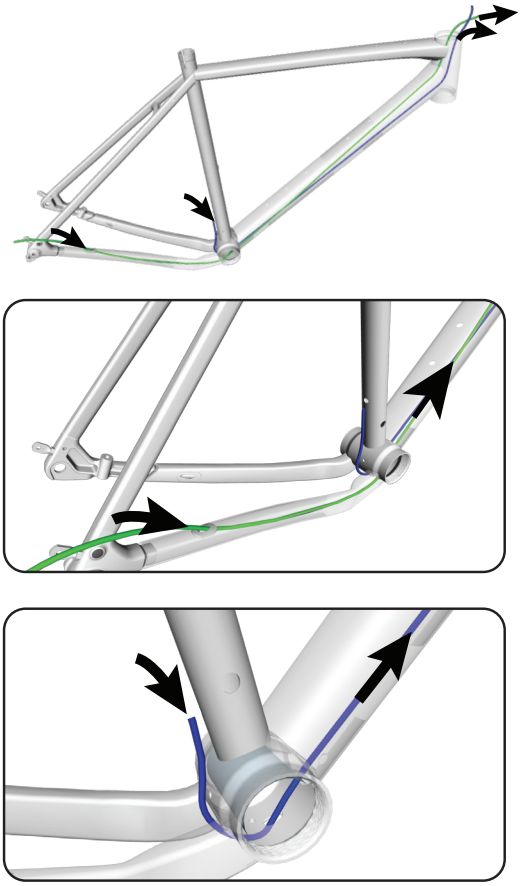

3. Install the bottom bracket above the shift housing(s) and rear brake hose.

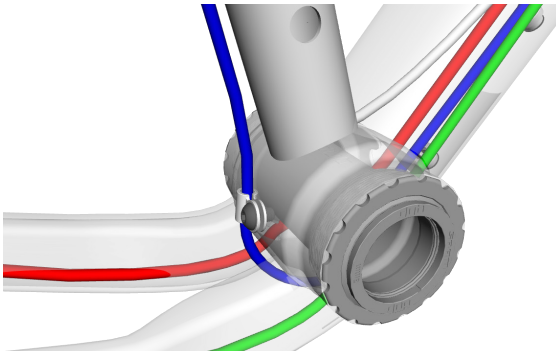

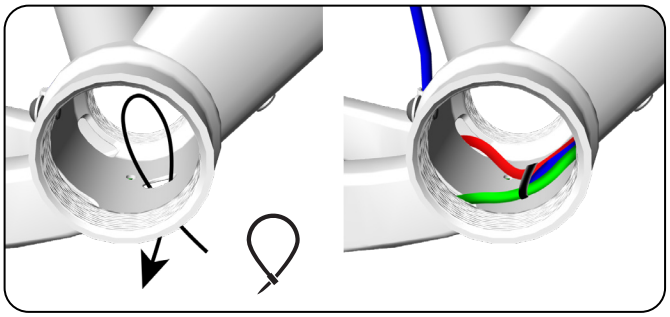

NOTE: Prevent damage to the bottom bracket sleeve. Ensure cables do not obstruct the sleeve alignment.

TIP: Use a zip tie to temporarily pull cables down for easier sleeve installation.

4. Install the headset following one of the procedures below (depending on your stem system):

- RCS Pro headset
- RCS Universal headset

Brake Routing — AXS

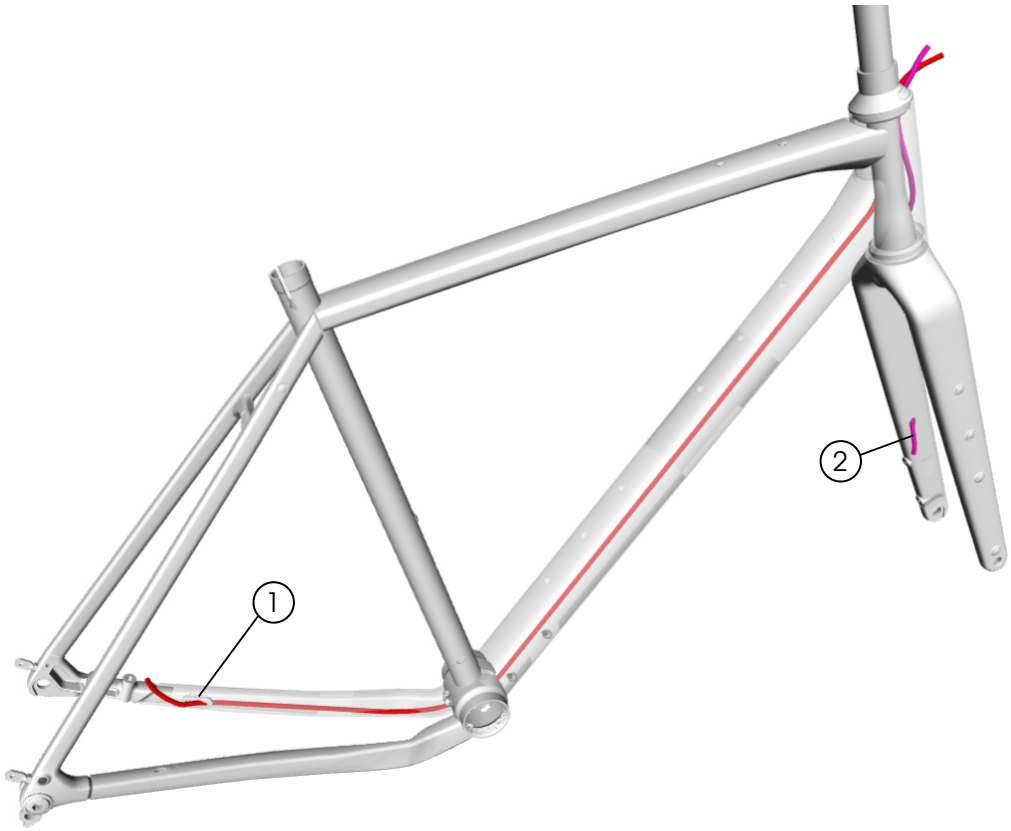

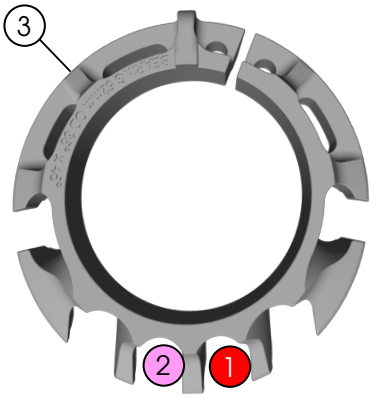

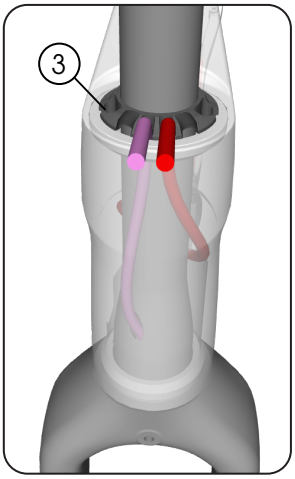

1. Rear brake hose
2. Front brake hose
3. Split ring — *W5315339*
4. Plate — *W5317363*
5. Fastener (M3 x 10mm) — *W545633*

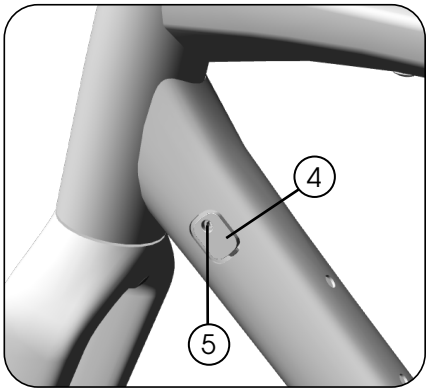

Information about AXS system is available at sram.com/service.

Brake Routing — AXS: instructions

1.

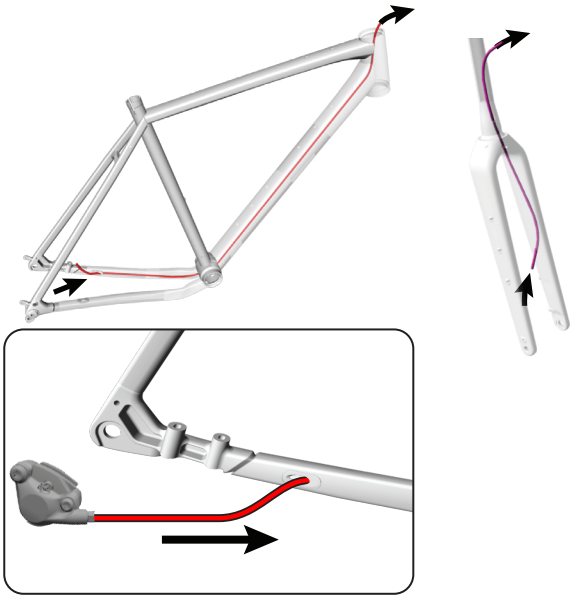

2. Install the bottom bracket above the rear brake hose.

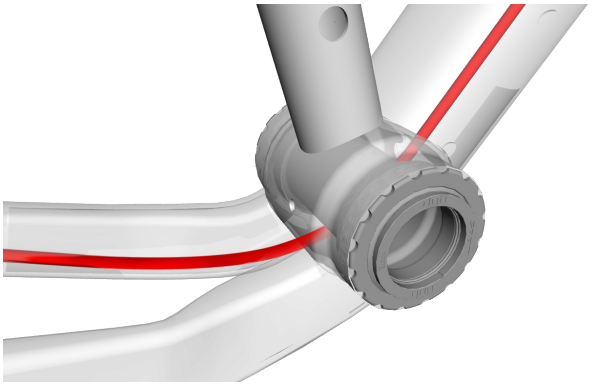

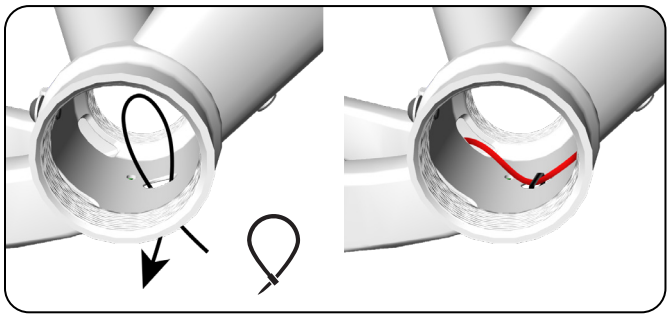

NOTE: Prevent damage to the bottom bracket sleeve. Ensure cable does not obstruct the sleeve alignment.

TIP: Use a zip tie to temporarily pull cable down for easier sleeve installation.

3. Install the headset and stem following one of the procedures below (depending on your stem system):

- RCS Race headset
- RCS Pro headset
- RCS Universal headset

Routing — dropper post cable

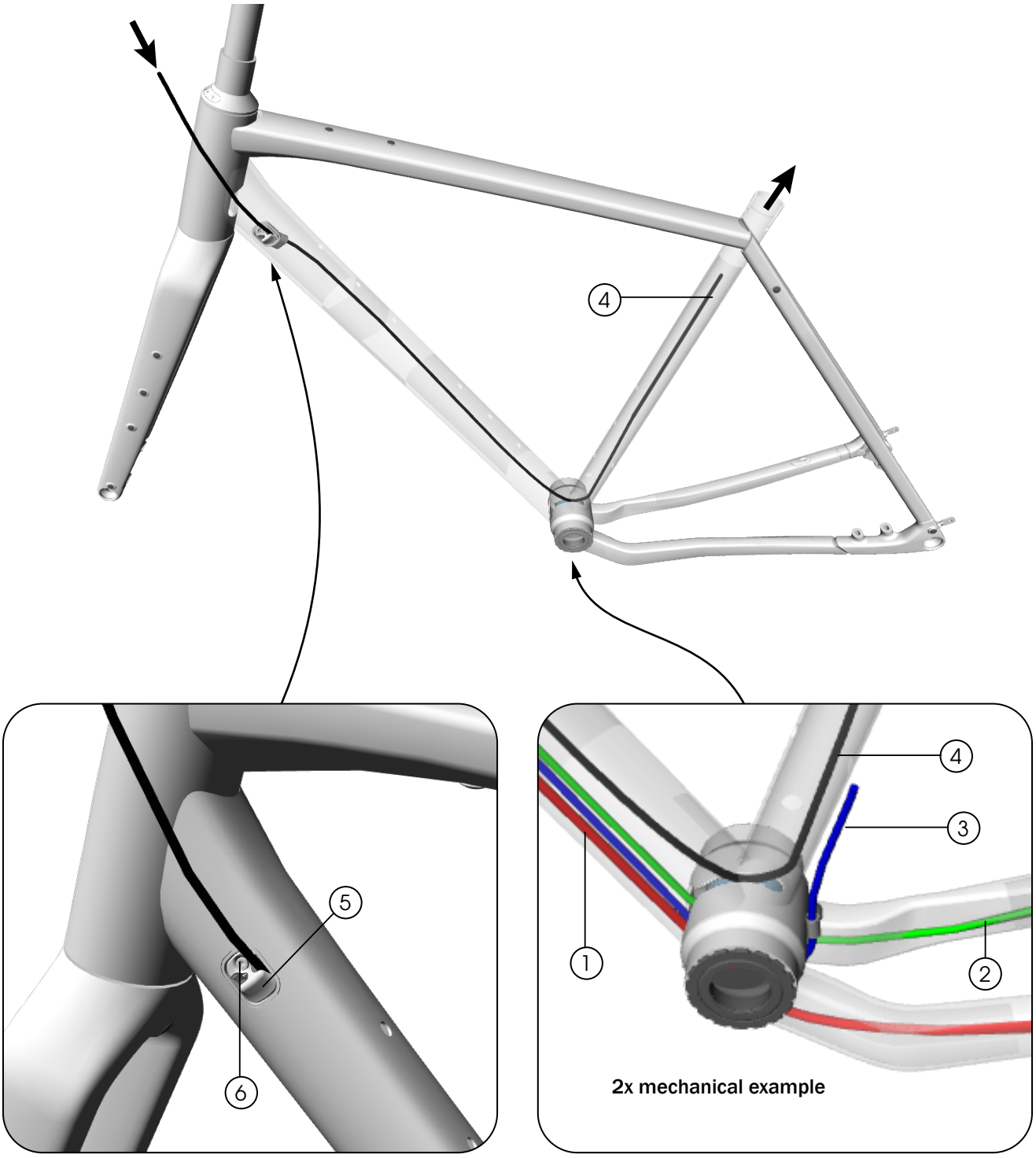

2x mechanical example

1. Rear brake hose
2. Rear derailleur cable
3. Front derailleur cable
4. Dropper post cable
5. Cable entry guide — *W5317471*
6. Fastener (M3 x 10mm) — *W545633* 2.5

RCS Race headset

NOTE: The RCS Race headset is only compatible with electronic shifting.

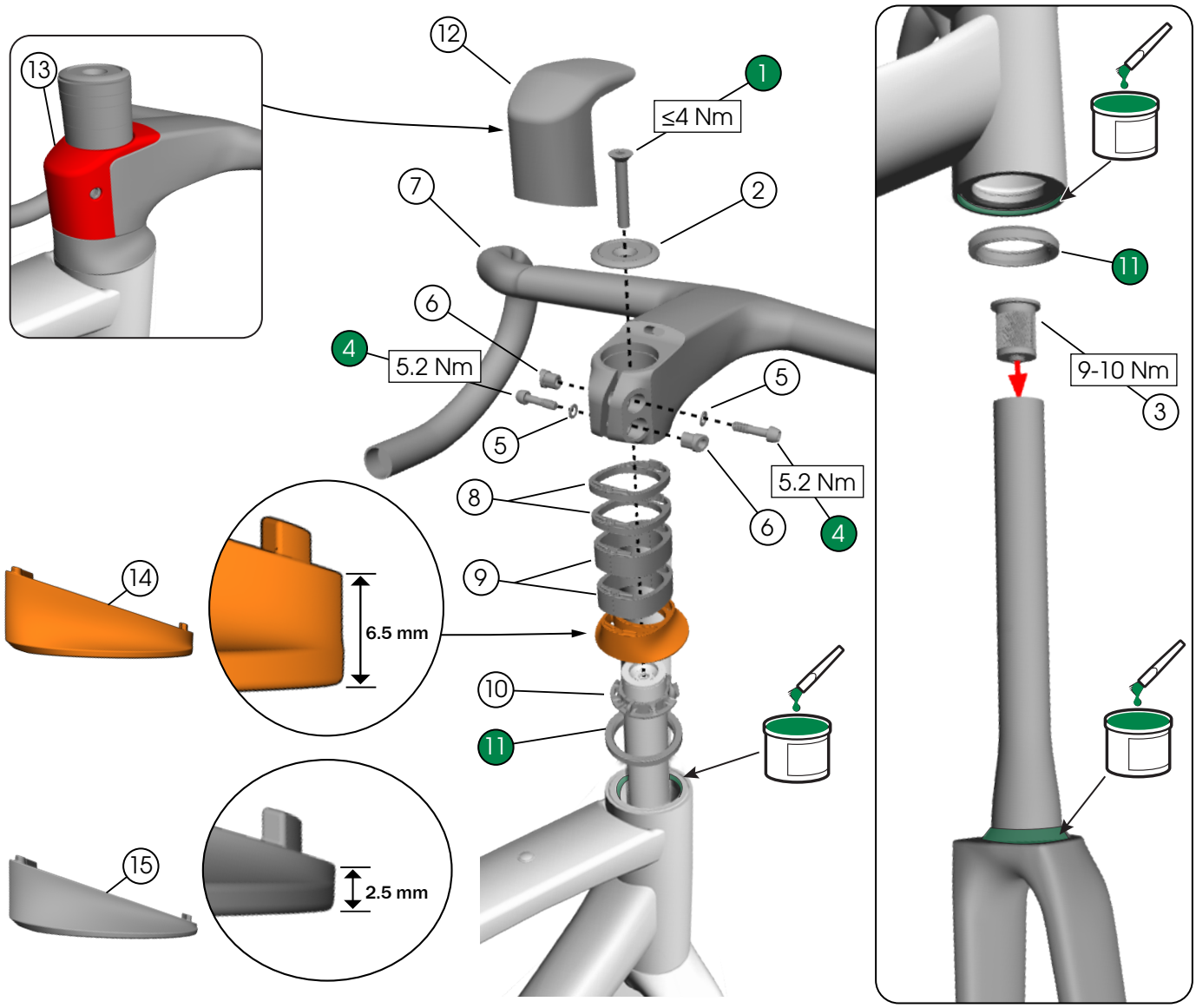

1. Fastener (M6 x 35 mm)
2. Top cap
3. Expander plug



W547432

4. Fasteners (M5 x 18.5 mm)
5. Washers (M5)
6. D-nuts (M5)



5276082

7. Aero RSL barstem (42 mm x 120 mm, -7°) — **W5316693*
8. Spacers (5 mm) — *W5316079*
9. Spacers (15 mm) — *W5316080*
10. Split ring — *W5315339*
11. Headset bearings — *W5322818*
12. Barstem cover — *W5316077*
13. Exposed barstem cover — *W5316078*
14. Bearing top cover — *W5316081*
15. Bearing top cover, low — *5325626*

**see Trekbikes.com for full product list*

RCS Race spacers

NOTE: If you remove spacers below the stem, you must add the same height of spacers above the stem or cut the steerer tube.

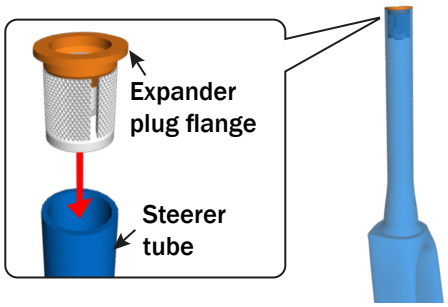

WARNING

Do not exceed 40 mm of headset spacers above or below the stem. If there are more than 40 mm of spacers, the steerer tube could become damaged and break, causing a crash resulting in injury.

Below stem

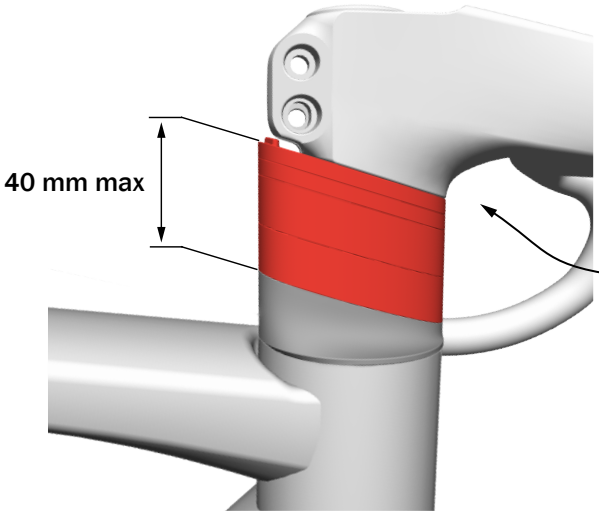

The expander plug flange must sit flush or slightly above (0-2 mm) the ridge inside the barstem.

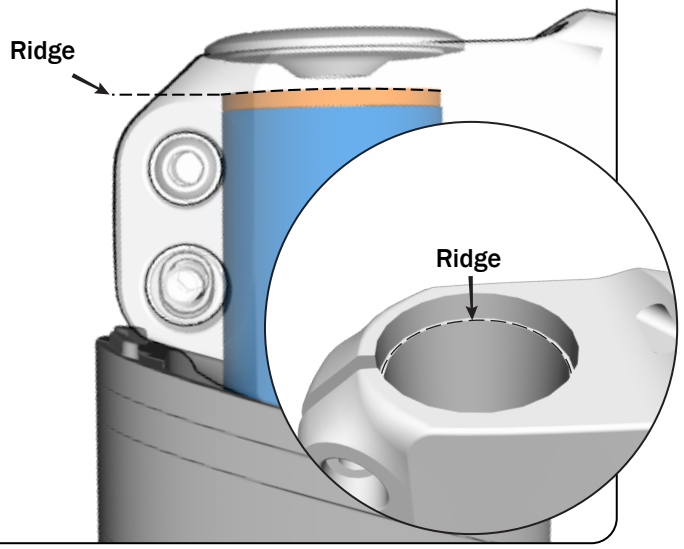

Above stem

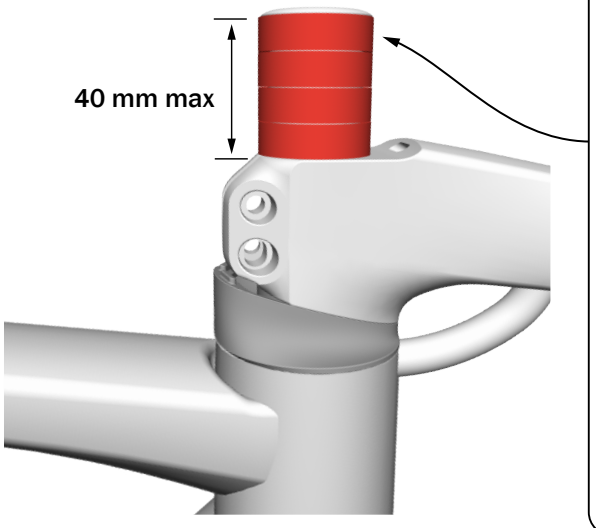

If there are any spacers above the stem, the expander plug flange must extend 3-4 mm into the top spacer.

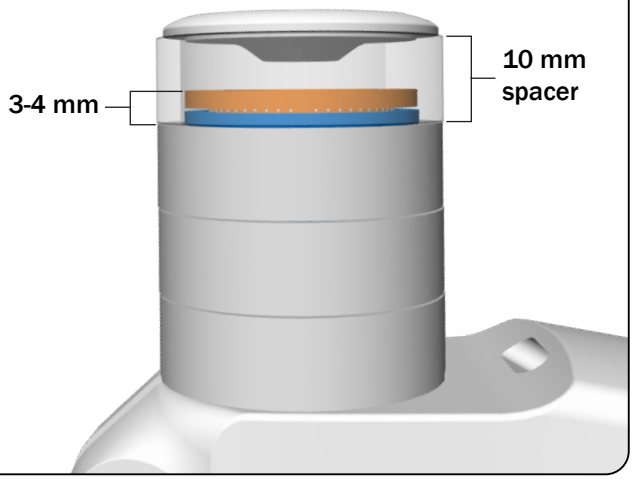

Blendr base

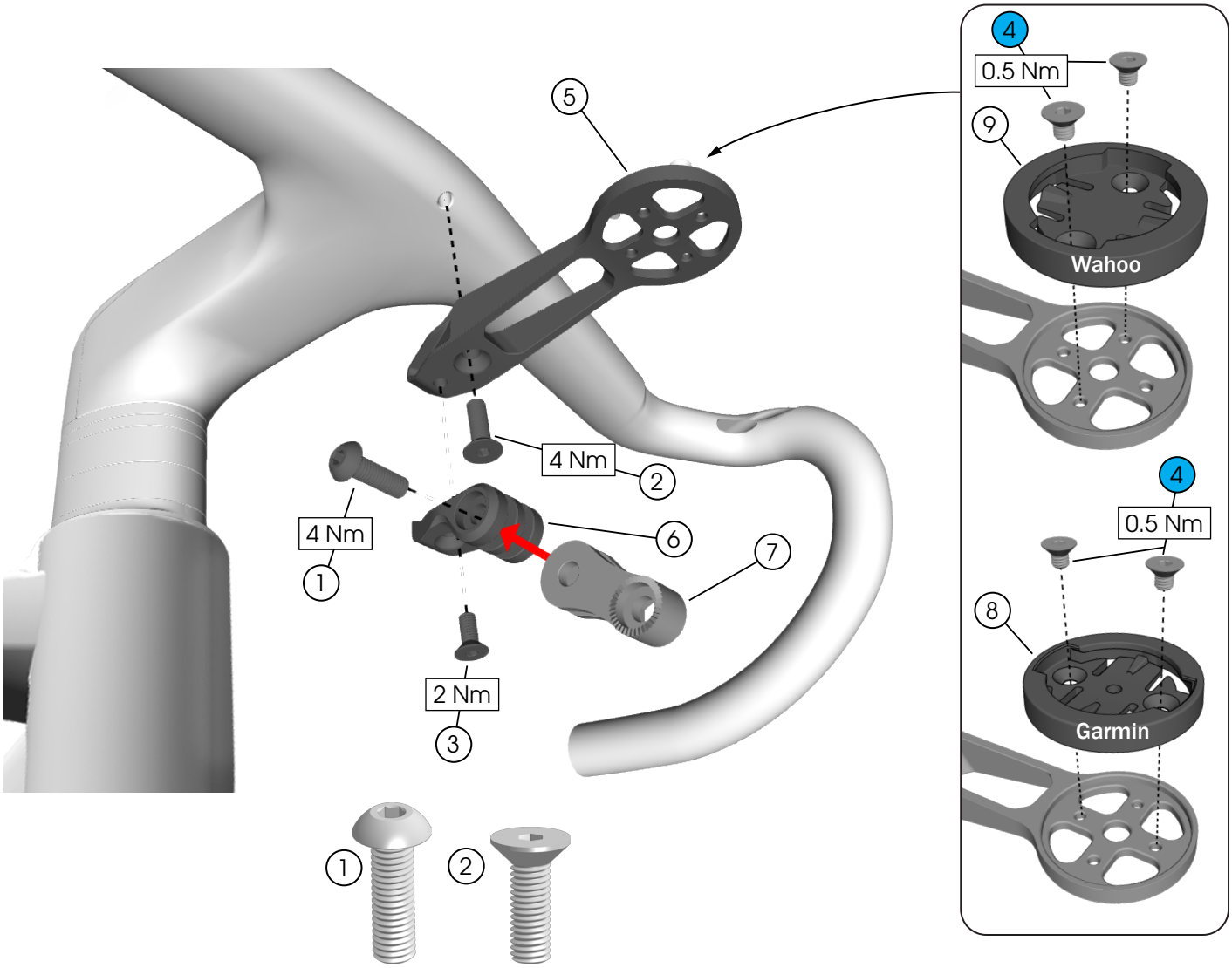

1. Fastener (M5 x 16 mm)
2. Fastener (M5 x 16 mm)
3. Fastener (M4 x 10 mm)
4. Fasteners (M3 x 2 mm)

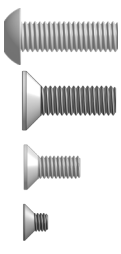

5325346

5. Base
6. Knuckle
7. Reflector mount
8. Garmin puck — *5266373*
9. Wahoo puck — *5266374*

Install the RCS Race

Before you begin:

- Install brake calipers.
- Route all housings through the frame/fork and connect them to the calipers (see Brake Routing — AXS).
- Make sure the steerer tube is the correct length for the stack/spacer height (see RCS Race spacers).

1.

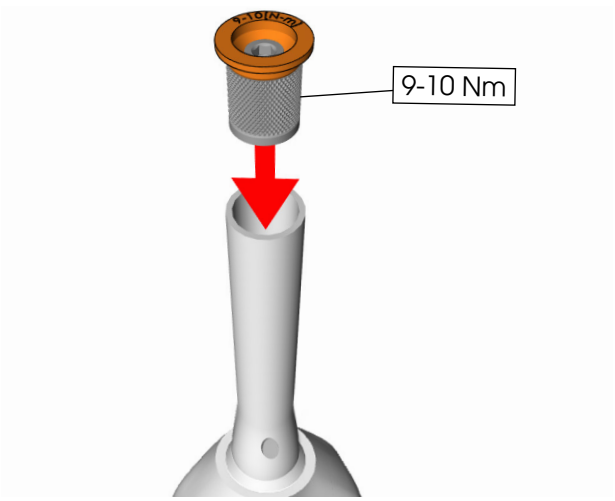

2.

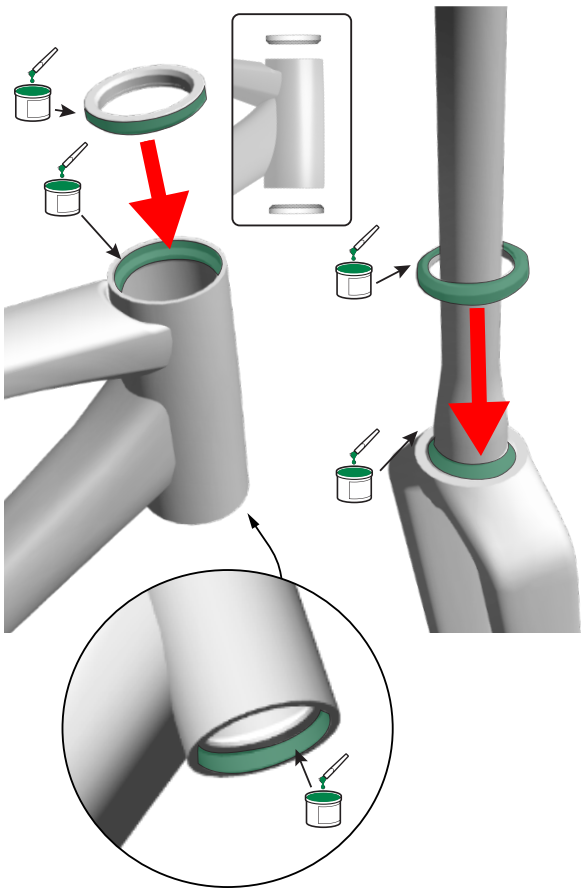

3.

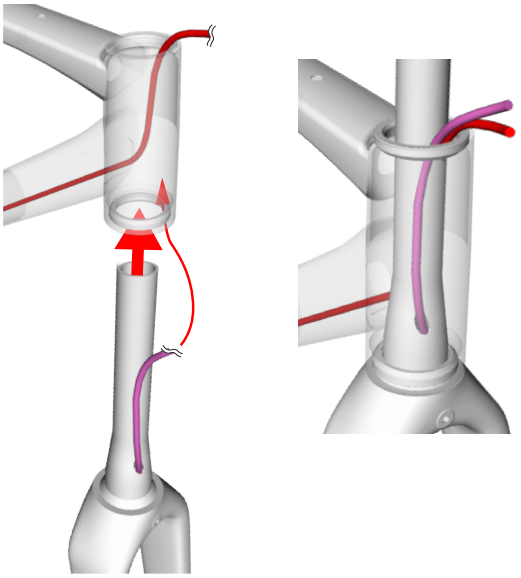

4.

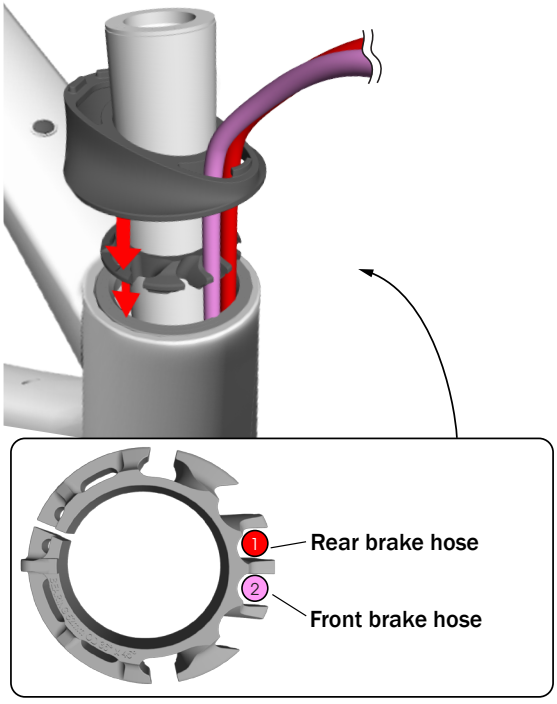

Install the RCS Race (continued)

5. Slide the spacers down the steerer tube. Then feed about 40 mm of the rear brake hose into the frame so the handlebar can turn freely.

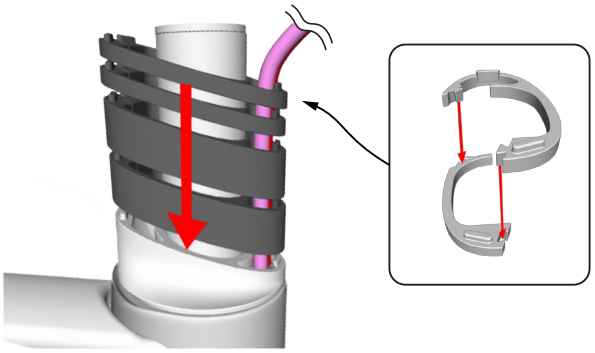

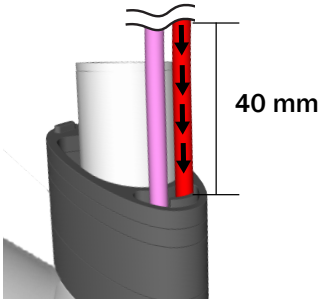

6. Route the brake hoses through the barstem using the pre-routed housing guides or an internal cable routing tool (such as Park Tool IR-1.3).

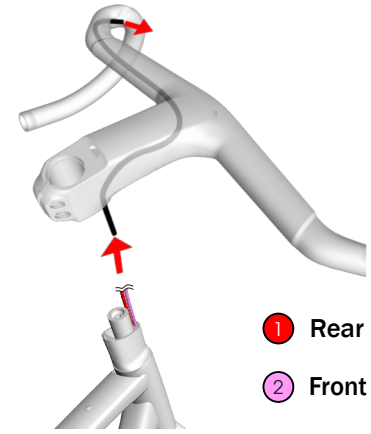

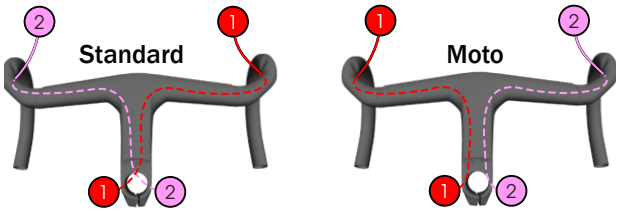

7. Before installing the barstem, attach the exposed cover if you plan to use it.

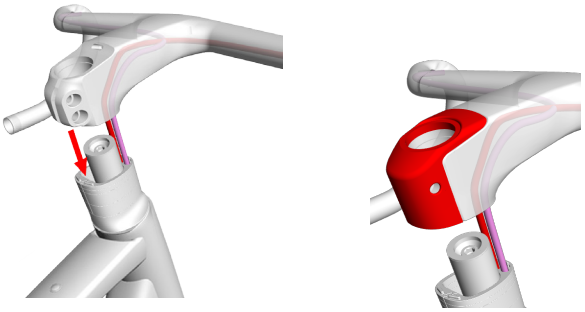

8.

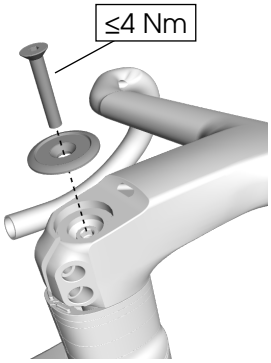

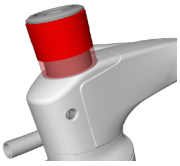

Exposed barstem cover.

9. Tighten both stem fasteners — switching between them — until they are fully torqued.

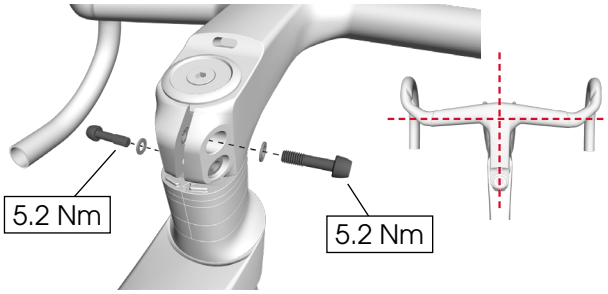

10. Install the barstem cover (unless you used the exposed cover in step 7).

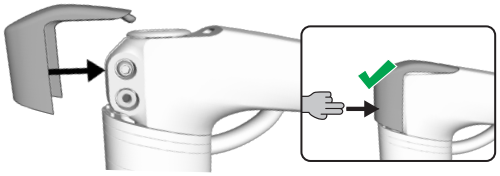



RCS Pro headset

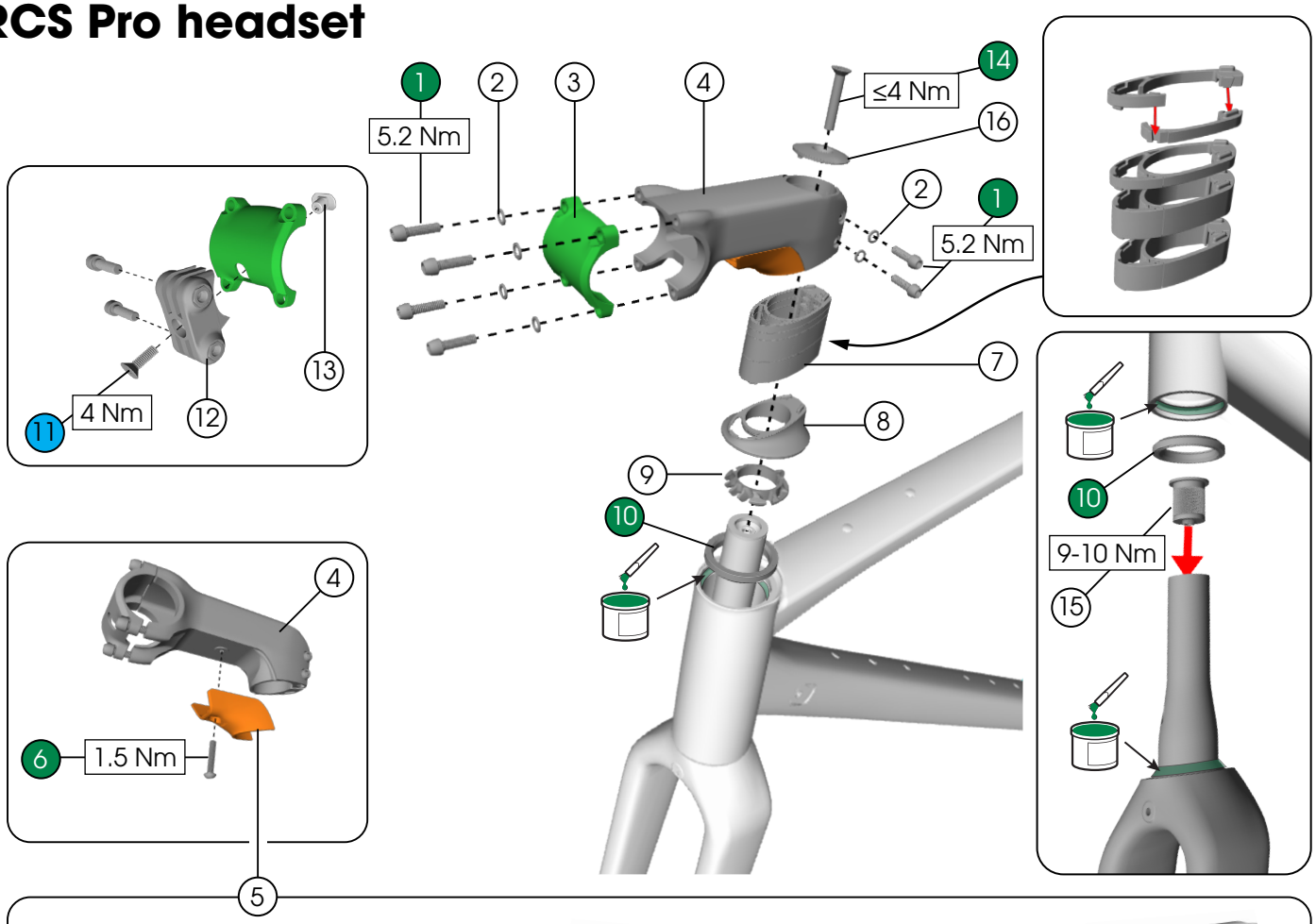

Available routing covers

7° stem

7° x 60/70 mm — *W5274602*

7° x 80/90/100 mm — *W5274603*

-7° stem

-7° x 60/70/80 mm — *W5274599*

-7° x 90/100/110 mm — *W5274600*

-7° x 120/130/140 mm — *W5274601*

1. Fasteners (M5 x 15 mm)
2. Washers (M5)
3. Faceplate
4. RCS Race stem (-7° x 100 mm)
5. Routing cover
6. Fastener (M4 x 25 mm)

**5274584*

7. Spacers
   - 5 mm — *5296906*
   - 15 mm — *5296905*
8. Bearing top cover — *W5317347*
9. Split ring — *W5315339*
10. Bearings — *W5322818*
11. Fastener (M5 x 12 mm)
12. Duo Blendr base
13. Nut

W5274964

14. Fastener (M6 x 35 mm)
15. Expander plug

W547432

16. RCS Pro top cap — *W5274966*

**see Trekbikes.com for full product list*

RCS Pro spacers

NOTE: If you remove spacers below the stem, you must add the same height of spacers above the stem or cut the steerer tube.

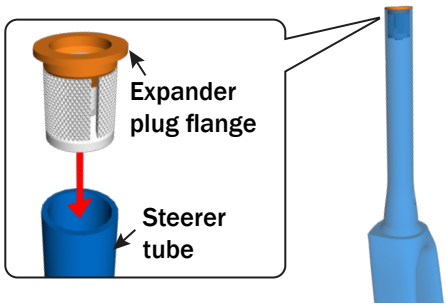

⚠ WARNING

Do not exceed 40 mm of headset spacers above or below the stem. If there are more than 40 mm of spacers, the steerer tube could become damaged and break, causing a crash resulting in injury.

Below stem

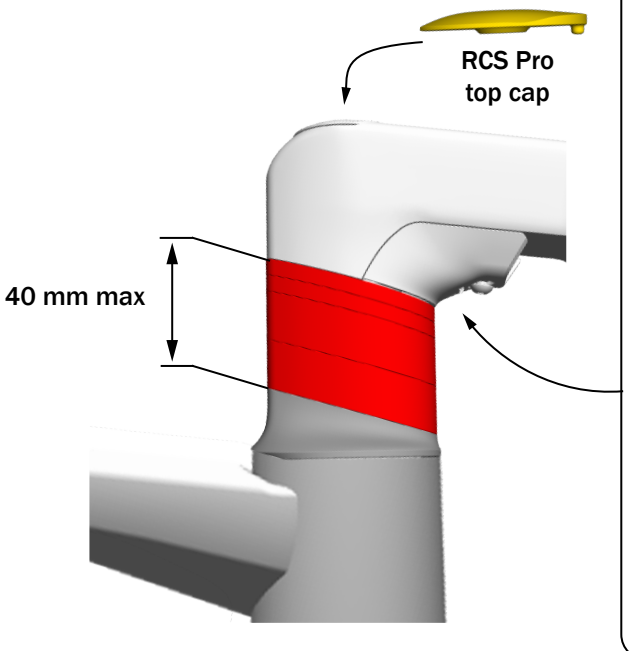

The expander plug flange must sit flush or slightly (0-2 mm) above the ridge inside the barstem.

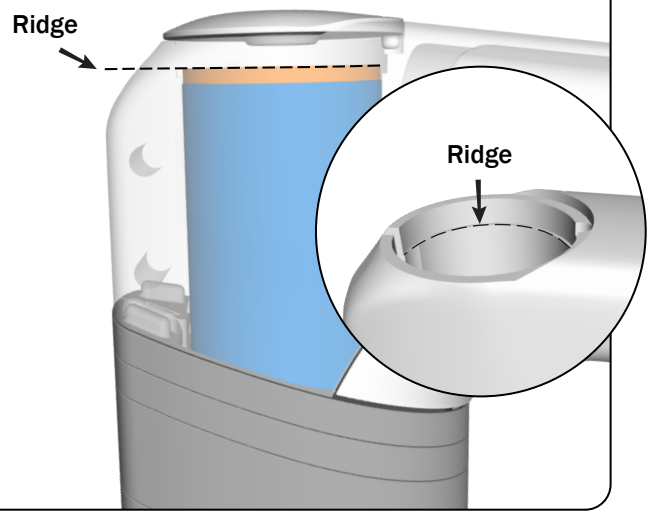

Above stem

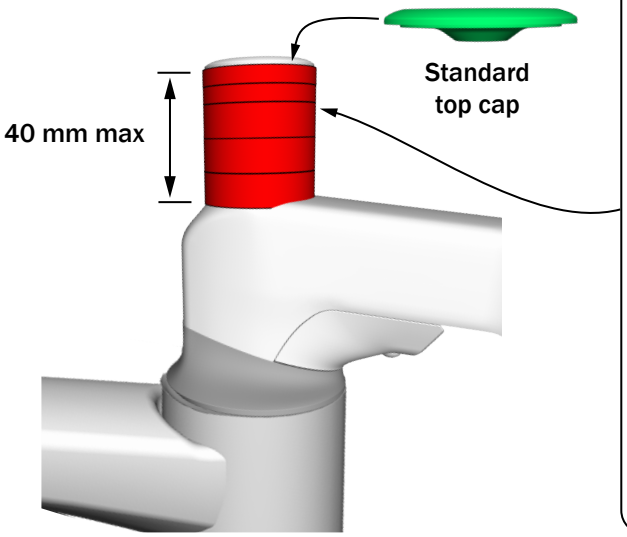

If there are any spacers above the stem, the expander plug flange must extend 3-4 mm into the top spacer.

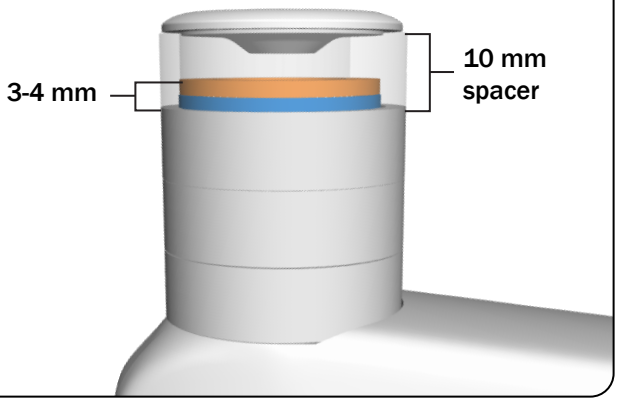

Install the RCS Pro

Before you begin:

- Install derailleur(s) and brake calipers.
- Route all cables/hoses through the frame/fork and connect them to the derailleurs/calipers.
- Make sure the steerer tube is the correct length for the stack/spacer height (see RCS Pro spacers).

1.

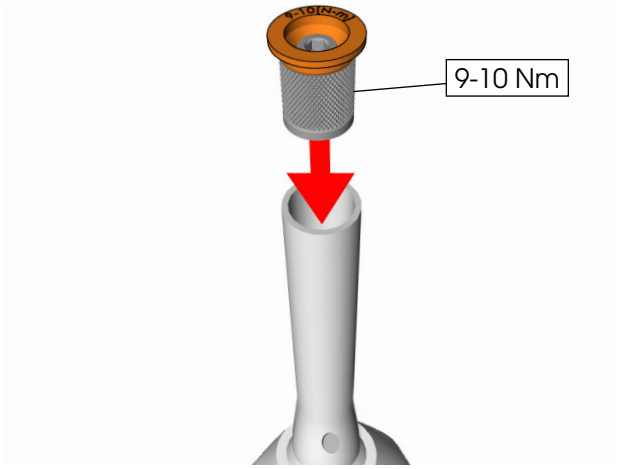

2.

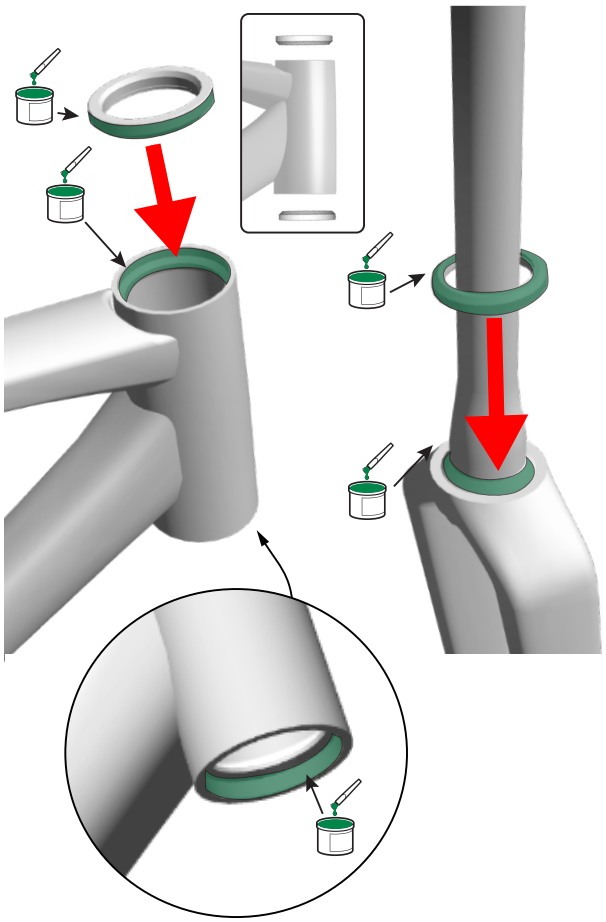

3.

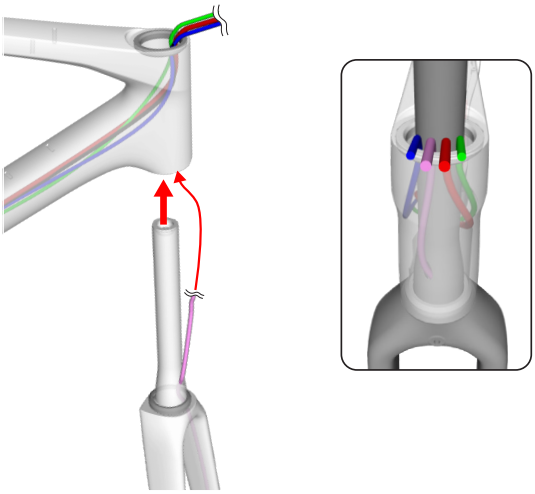

4.

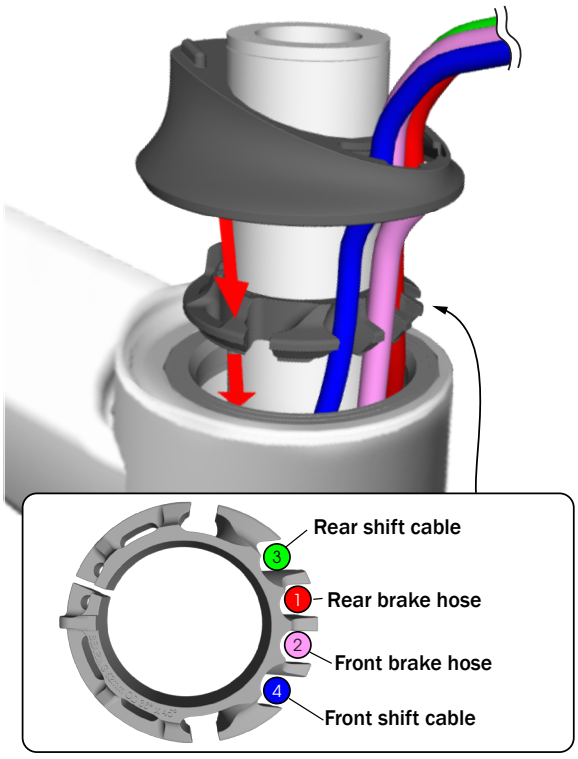

Install the RCS Pro (continued)

5. Slide the spacers down the steerer tube. Then feed about 40 mm of the rear brake hose and the derailleur cable housing(s) into the frame so the handlebar can turn freely.

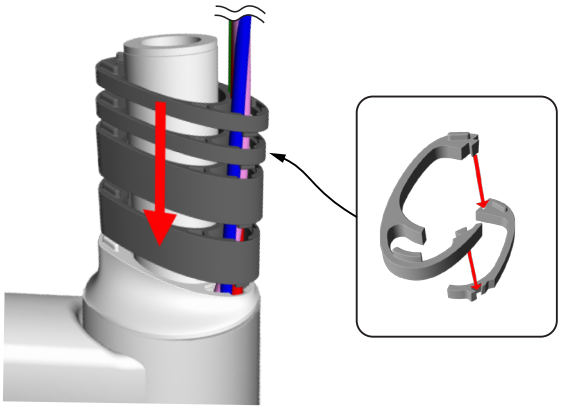

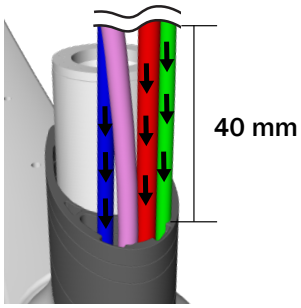

6.

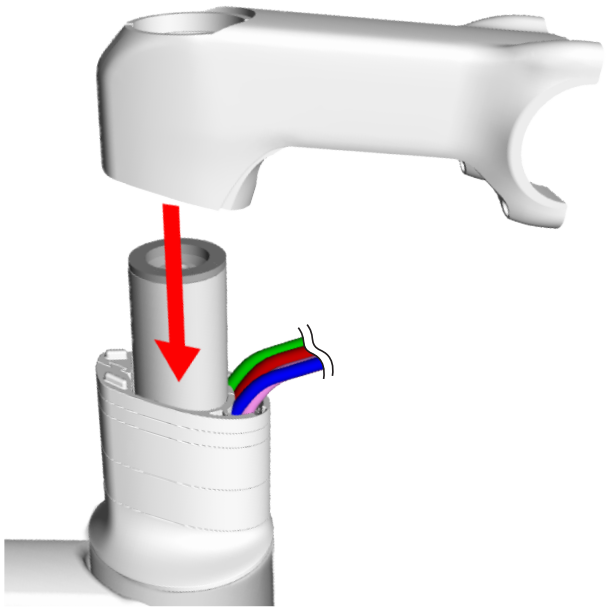

7.

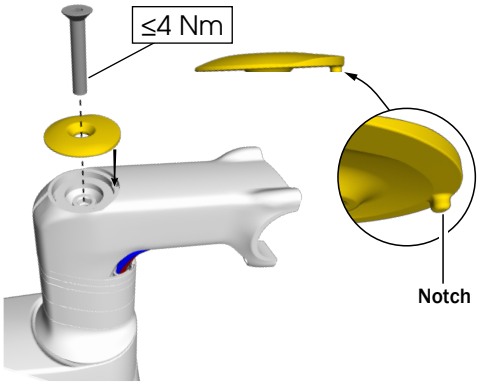

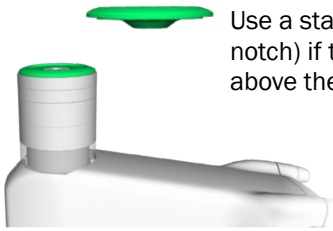

Use a standard top cap (no notch) if there are spacers above the stem.

8. Loosely tighten the faceplate fasteners to secure the handlebar.

OPTIONAL: Attach the Blendr base to the faceplate before attaching the handlebar.

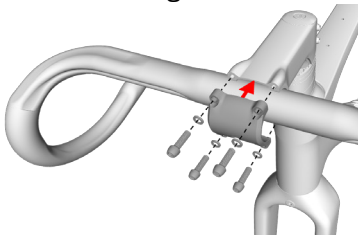

9. Fully tighten the top fasteners first — switching between them — until they are fully torqued. Repeat for the bottom two fasteners.

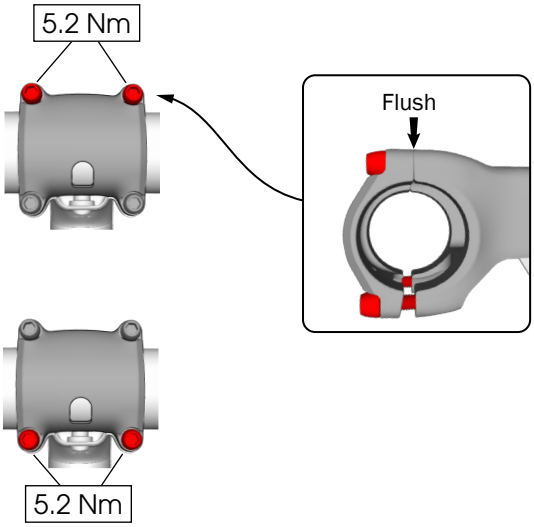

Install the RCS Pro (continued)

10. Tighten both stem fasteners — switching between them — until they are fully torqued.

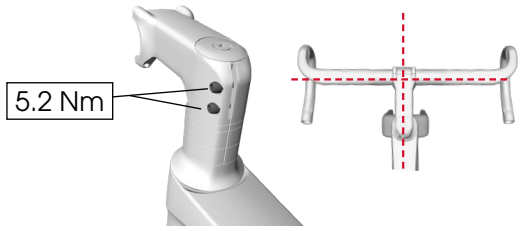

11. Insert the routing cover.

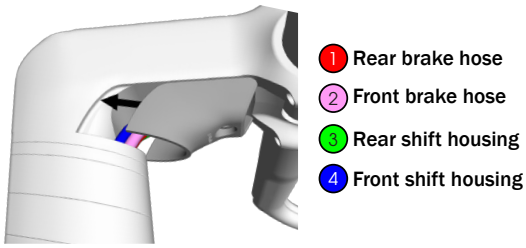

1. Rear brake hose
2. Front brake hose
3. Rear shift housing
4. Front shift housing

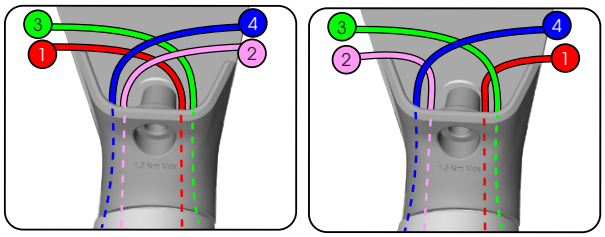

Standard Moto

12.

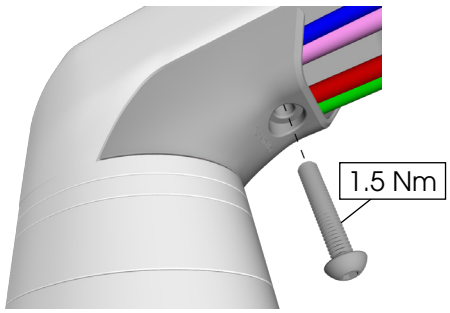

RCS Universal headset

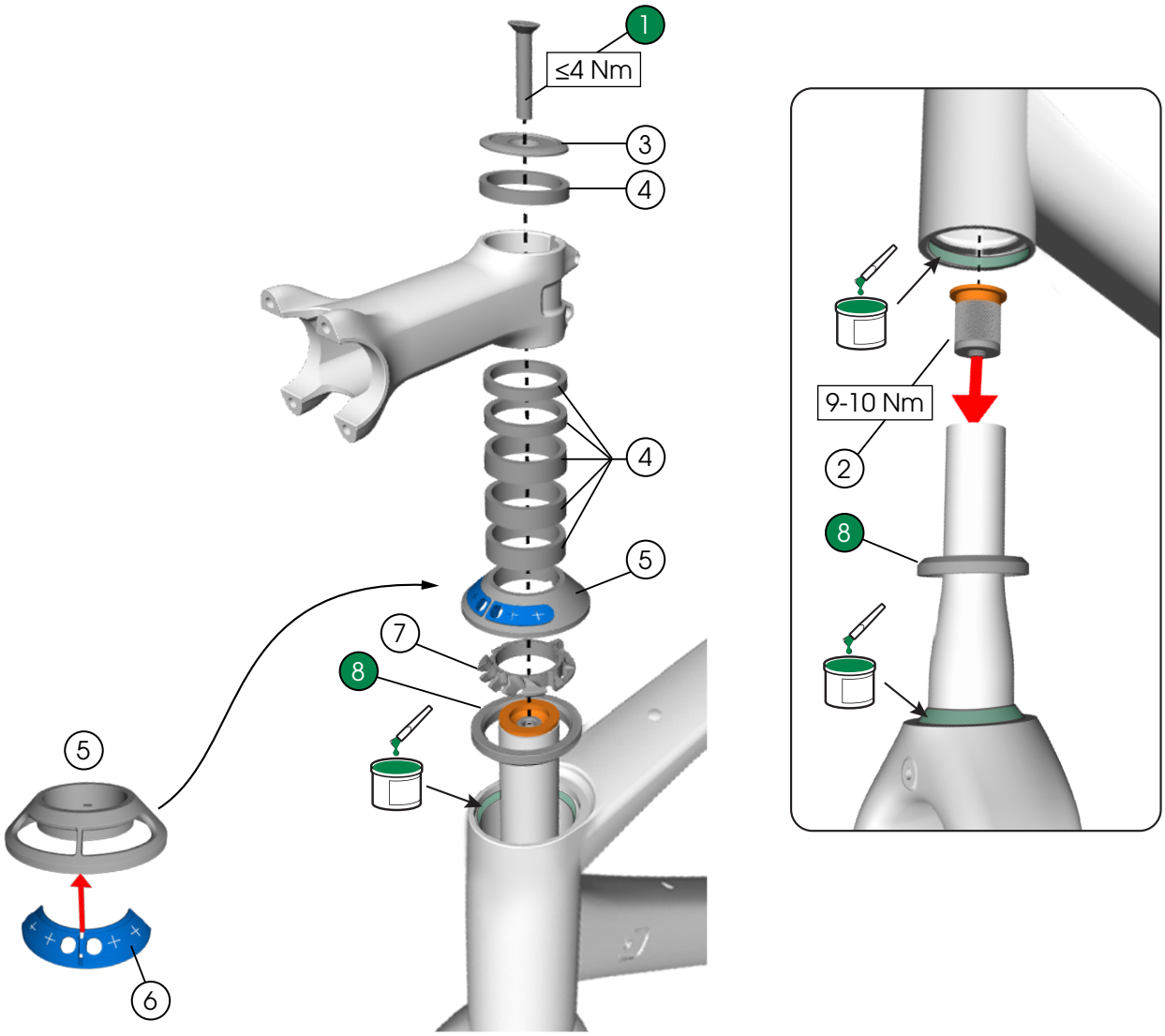

1. Fastener (M6 x 35 mm)
2. Expander plug
3. Top cap
4. Spacers (1-1/8" / 28.6 mm)
5. Bearing top cover
6. Bearing top cover grommet
7. Split ring — *W5315339*
8. Bearings — *W5322818*

4 — *W547432*

4 — 5 mm — *5253930*
4 — 10 mm — *5253931*

5, 6 — *5328901*

RCS Universal spacers

NOTE: If you remove spacers below the stem, you must add the same height of spacers above the stem or cut the steerer tube.

WARNING

Do not exceed 40 mm of headset spacers above or below the stem. If there are more than the maximum height of spacers, the steerer tube could become damaged and break, causing a crash resulting in injury.

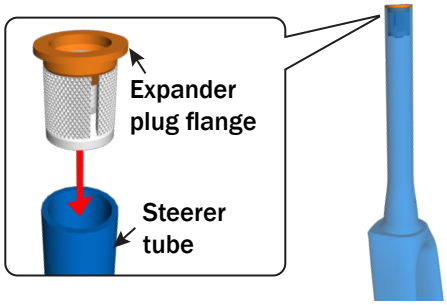

NOTE: Other stem types are compatible with this headset system. A spacer above the stem may not be required.

Below stem

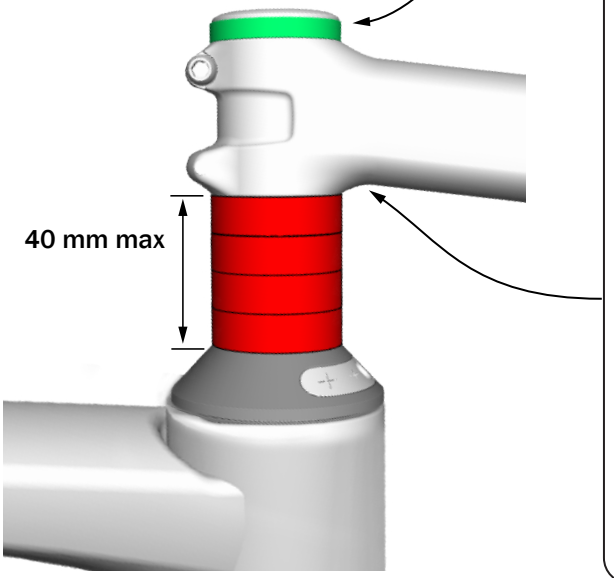

The steerer tube must sit flush or slightly below the top of the stem (0-2 mm).

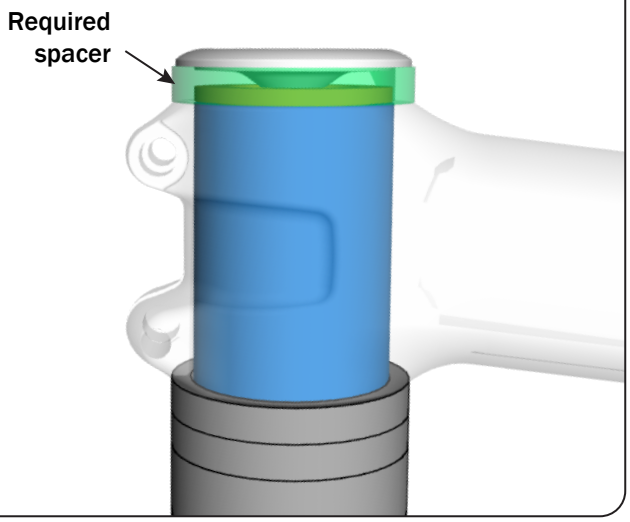

Above stem

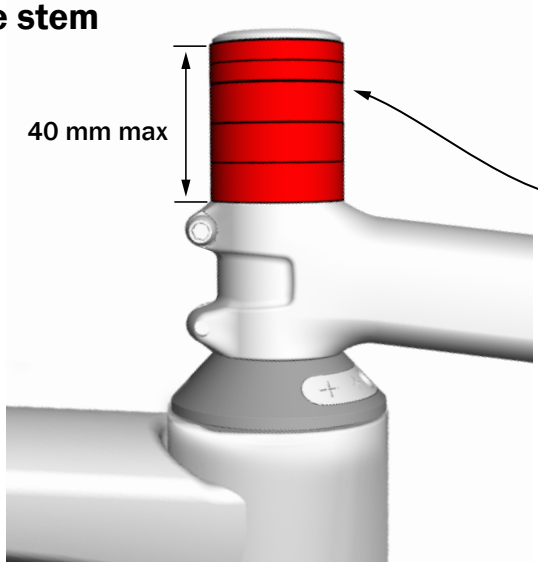

If there are any spacers above the stem, the expander nut flange must extend 3-4 mm into the top spacer.

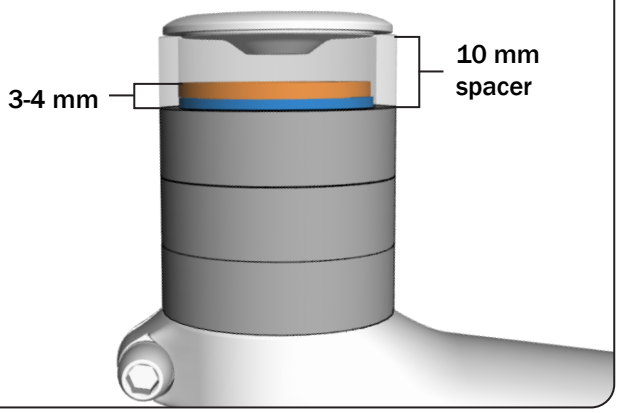

Install the RCS Universal

Before you begin:

- Install derailleur(s) and brake calipers.
- Route all cables/hoses through the frame/fork and connect them to the derailleurs/calipers (see Routing — mechanical or Brake Routing — AXS).
- Make sure the steerer tube is the correct length for the stack/spacer height (see RCS Universal spacers).

1.

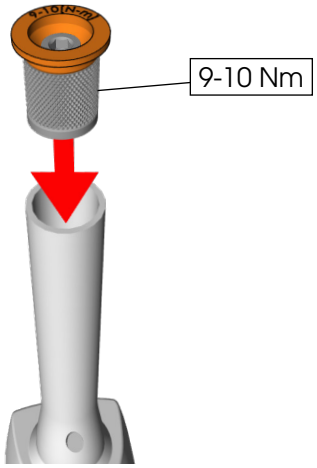

2.

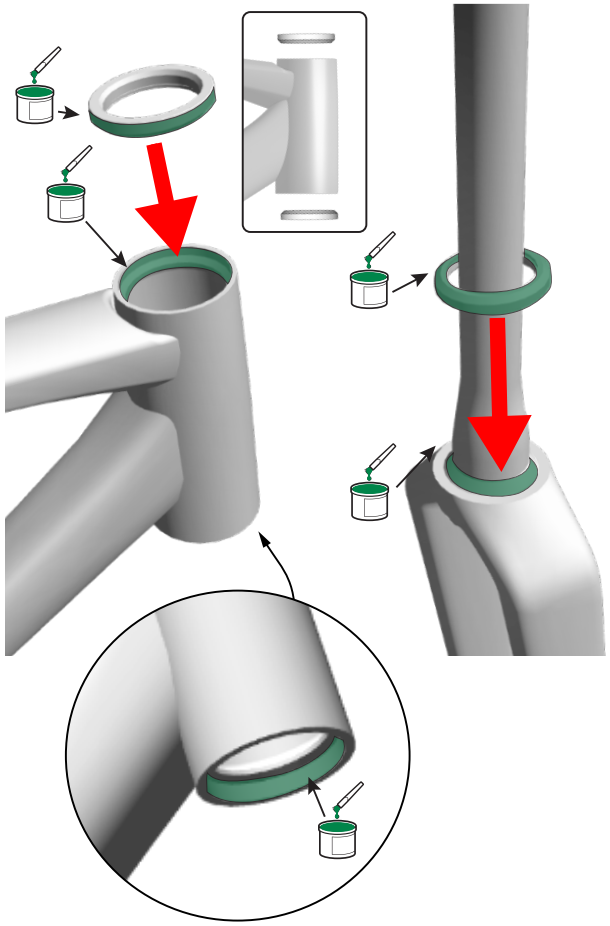

3.

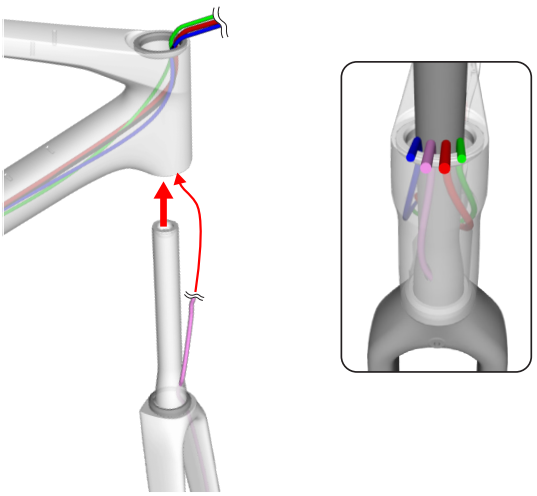

4.

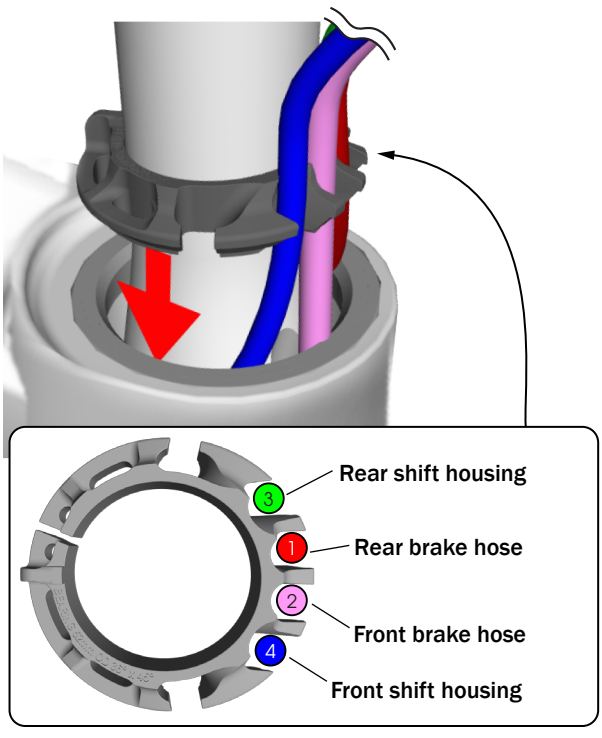

Install the RCS Universal (continued)

5. Route the brake hoses/cable housings through the bearing top cover. Then slide the bearing top cover down the steerer tube.

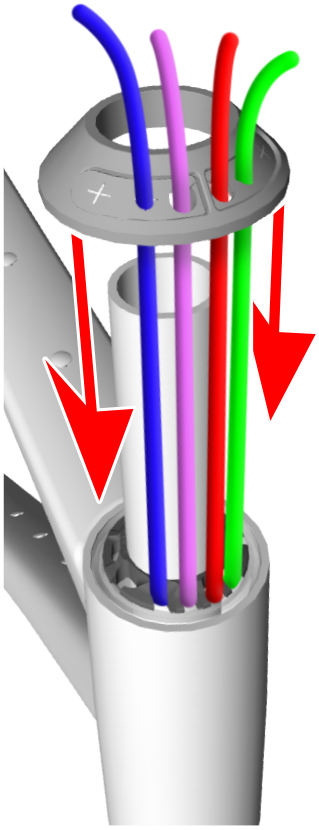

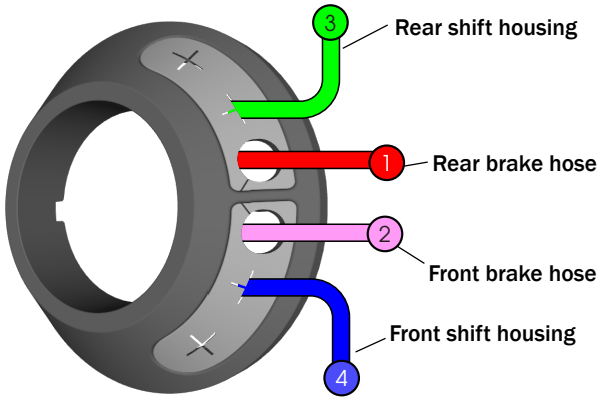

6. Slide the spacers and stem down the steerer tube.

NOTICE: Make sure at least one spacer is above the stem (unless the stem has an integrated spacer).

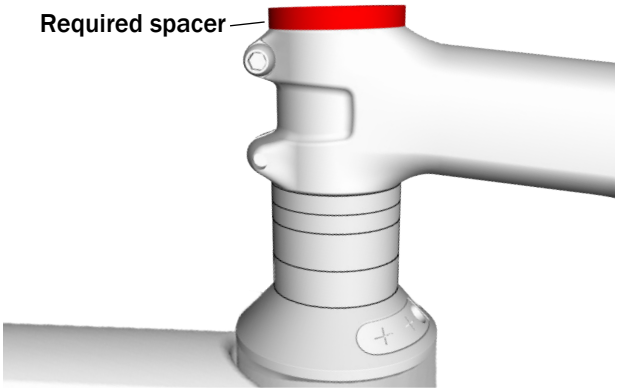

7.

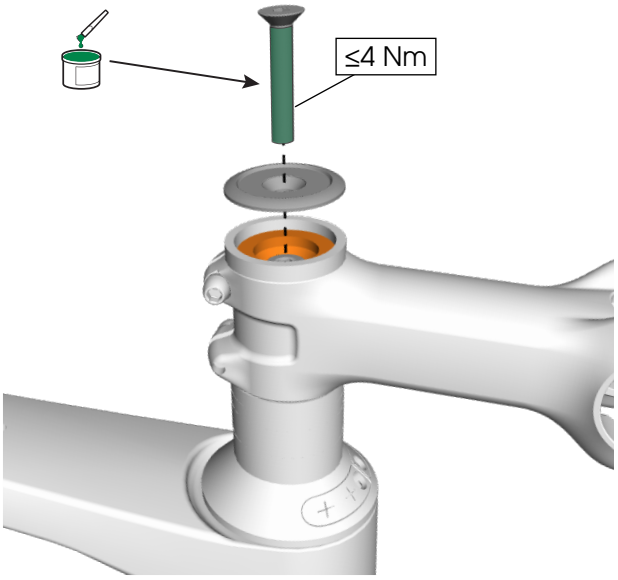

Frame guards

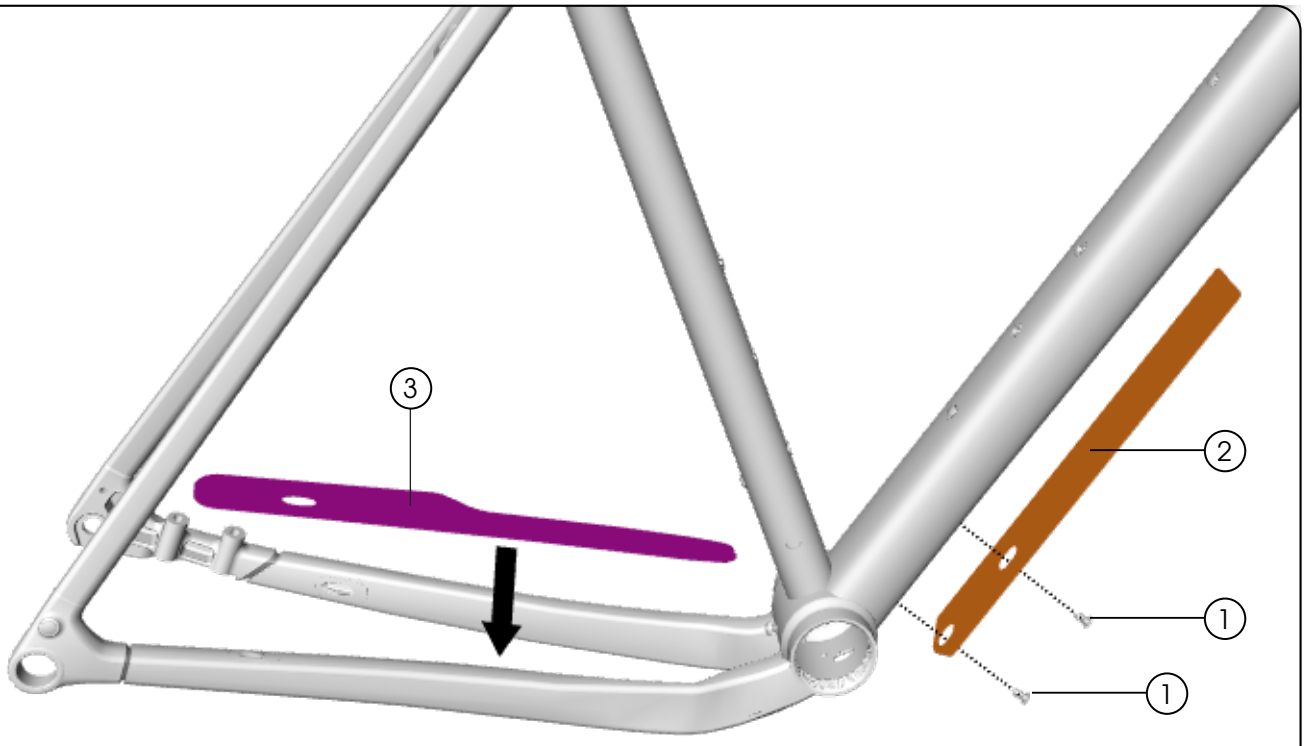

NOTE: Align guard with cable exit opening.

NOTE: Align guard with holes available for bottle cage attachment.

1. Plugs (M5) — *W308963*
2. Down tube guard — *W5329440*
3. Chainstay guard — *W5329441*



Install new down tube guard or chainstay guard

1. Clean the mating surface on the frame with 50/50 isopropyl alcohol mix.
2. Remove the adhesive backing and attach guard to the surface.

Reinstall the down tube guard or chainstay guard

1. Clean the mating surface on the frame with 50/50 isopropyl alcohol mix.
2. Sand the backside of the guard/plate to remove any remaining adhesive and roughen the surface.
3. Attach the guard/plate with a two-part epoxy.

   TIP: Wrap masking tape around the guard/plate and the frame to hold it in place while the epoxy cures.
4. Allow the epoxy to cure for 24 hours (or according to manufacturer's specifications).

Frame mounts

NOTE: There are additional mounts on larger frame sizes (see graphic below).

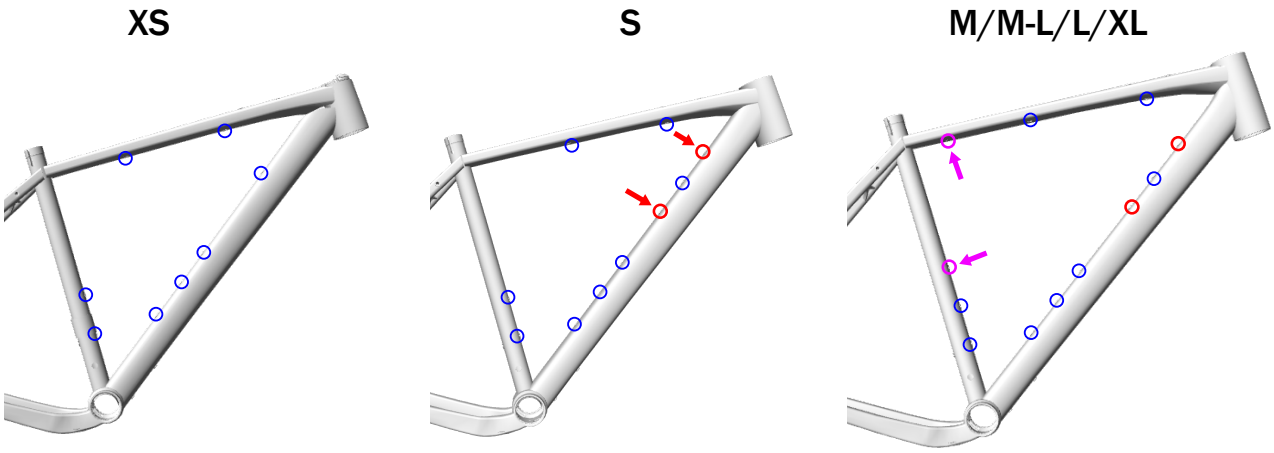

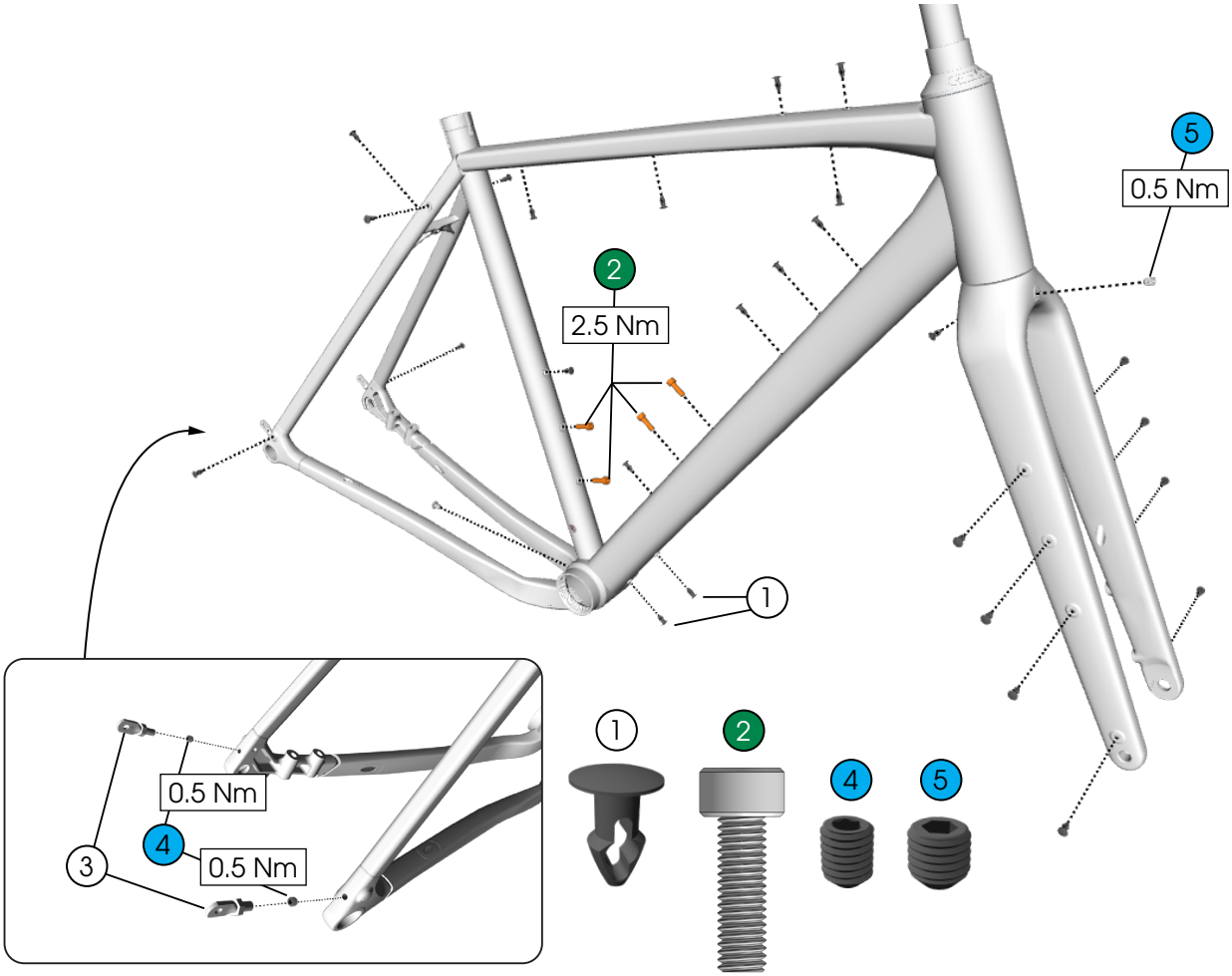

1. Plugs (M5) — *W308963*
2. Fasteners (M5 x 16 mm) — *W596821*
3. Fender mount fasteners — *W317707*
4. Set screws (M5 x 5 mm)
5. Set screw (M6 x 5 mm) — *W5321175*

Bottle cage adapters

Use the adapter to fit three bottle cages in the frame triangle.

NOTE: Only frame sizes M and larger can fit three bottles in the frame triangle.

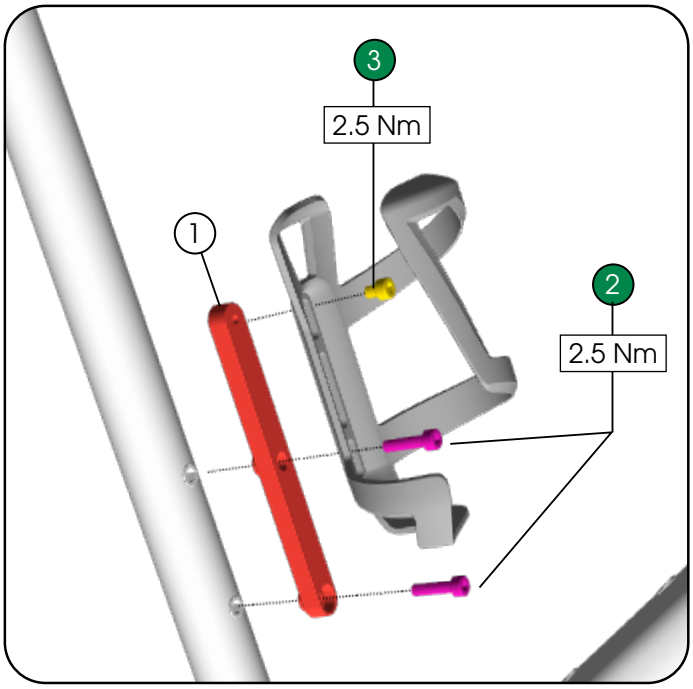

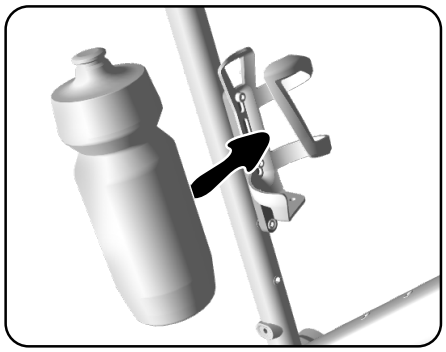

NOTE: Side-load bottle cages are required for these configurations.

M

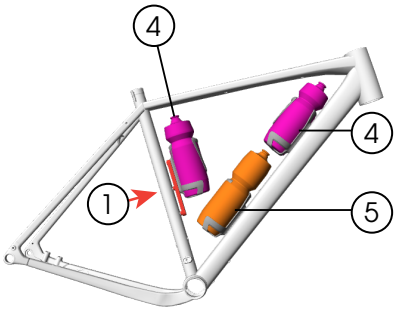

M-L/L

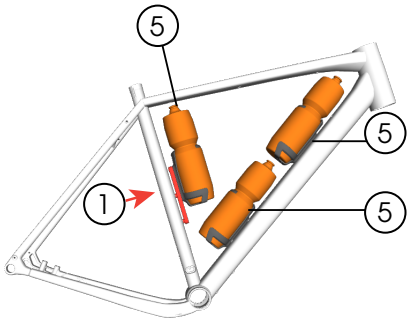

XL

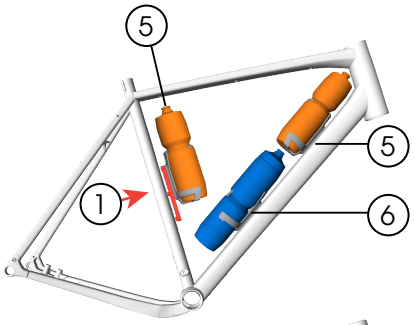

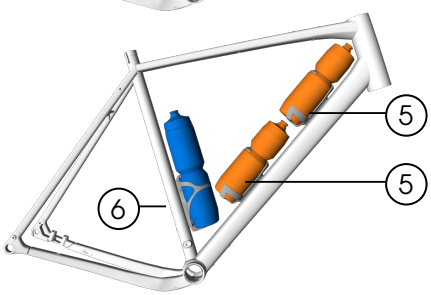

1. Adapter
2. Fasteners (M5 x 20 mm) — *W5271627*
3. Fastener (M5 x 8 mm)
4. 21 oz (621 ml) bottle 
5. 26 oz (769 ml) bottle 
6. 34 oz (1006 ml) bottle 

NOTE: Adapter not required on XL frame with this arrangement.

Triangle bag

NOTE: Triangle bags are sold aftermarket.

The charts below show the largest bottles you can fit with the bag installed.

XS

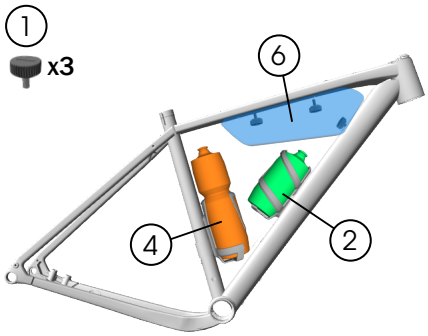

S

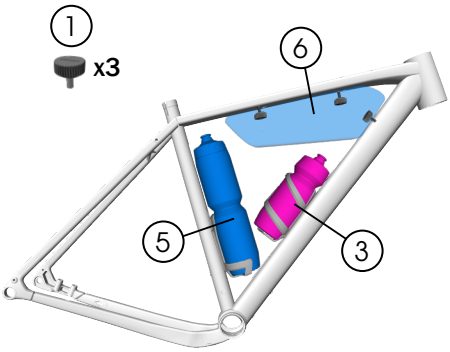

M

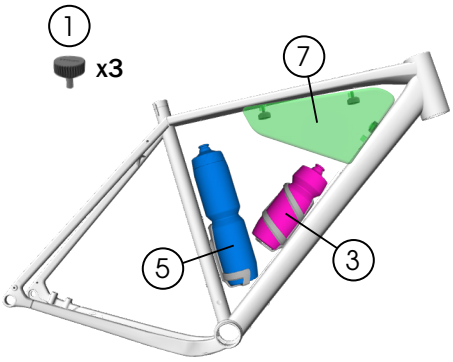

M-L

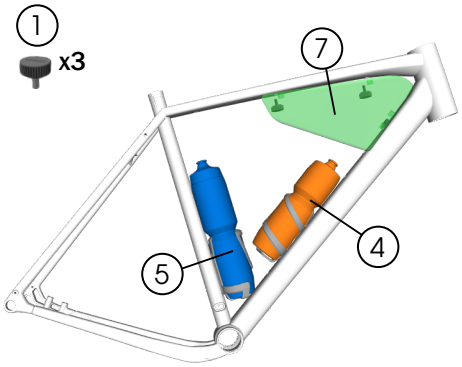

L

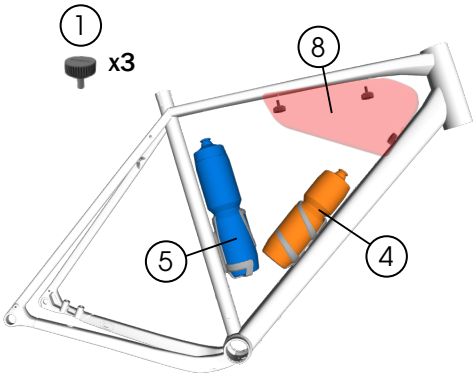

XL

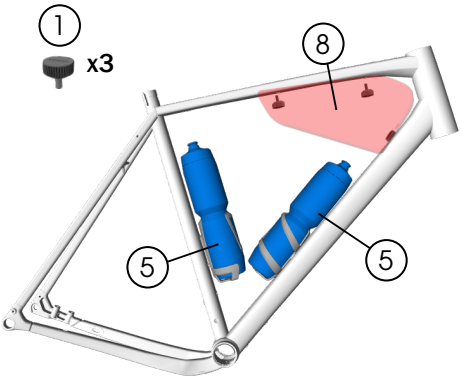

1. Thumb screws — *5324792*
2. 15 oz (444 ml) bottle 
3. 21 oz (621 ml) bottle 
4. 26 oz (769 ml) bottle 
5. 34 oz (1,006 ml) bottle 
6. Triangle bag, XS/S (1 L) — *5323152* 
7. Triangle bag, M/M-L (1.3 L) — *5323153* 
8. Triangle bag, L/XL (1.6 L) — *5323154* 

Adventure bag

NOTE: Adventure bags are sold aftermarket.

The charts below show the largest bottles you can fit with the bag installed.

XS

Not compatible

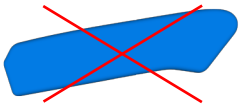

S

Not compatible

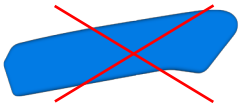

M

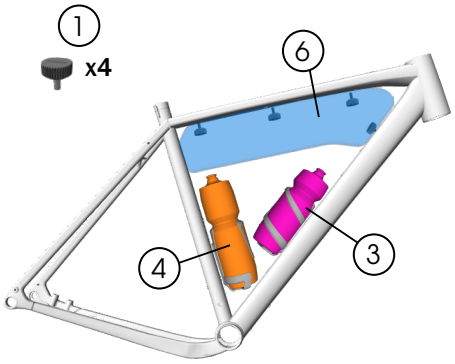

M-L

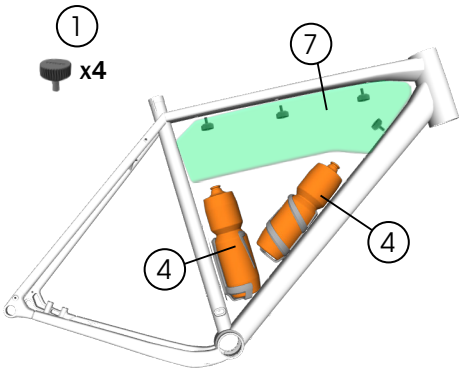

L

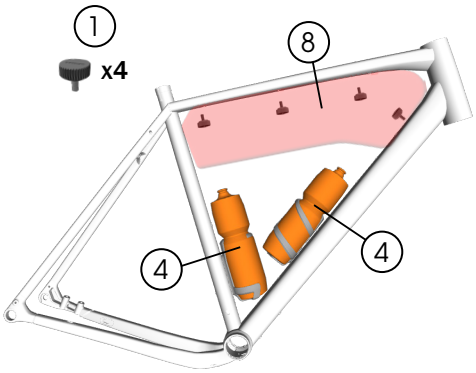

XL

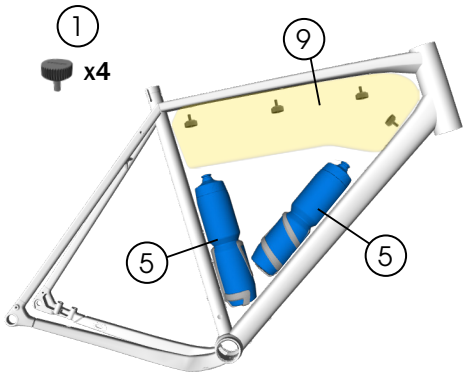

1. Thumb screws — *5324792*
2. 15 oz (444 ml) bottle 
3. 21 oz (621 ml) bottle 
4. 26 oz (769 ml) bottle 
5. 34 oz (1,006 ml) bottle 
6. Adventure bag, M (2 L) — *5323148* 
7. Adventure bag, M-L (2.6 L) — *5323149* 
8. Adventure bag, L (2.8 L) — *5323150* 
9. Adventure bag, XL (3 L) — *5323151*

Universal derailleur hanger (UDH) and axles

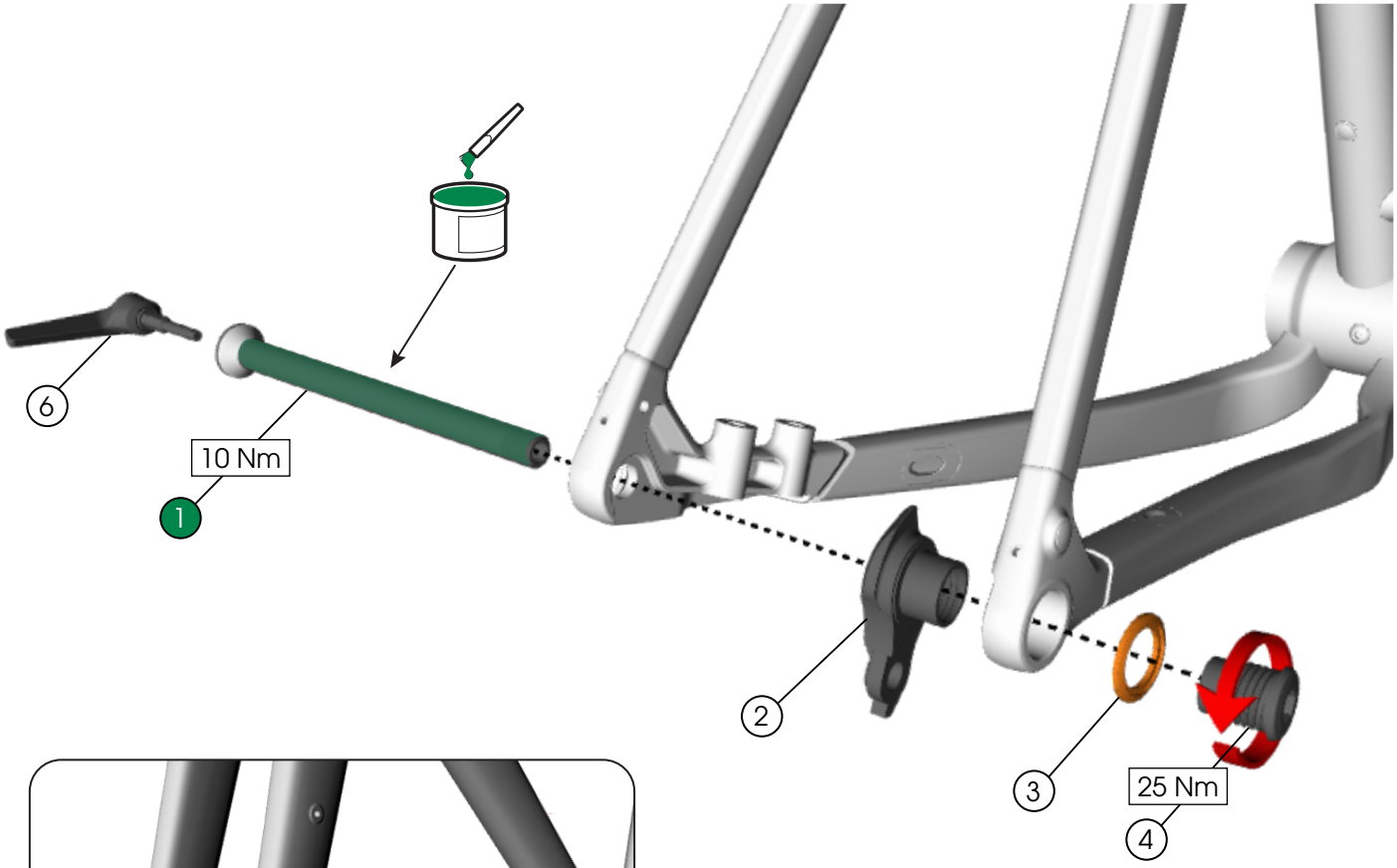

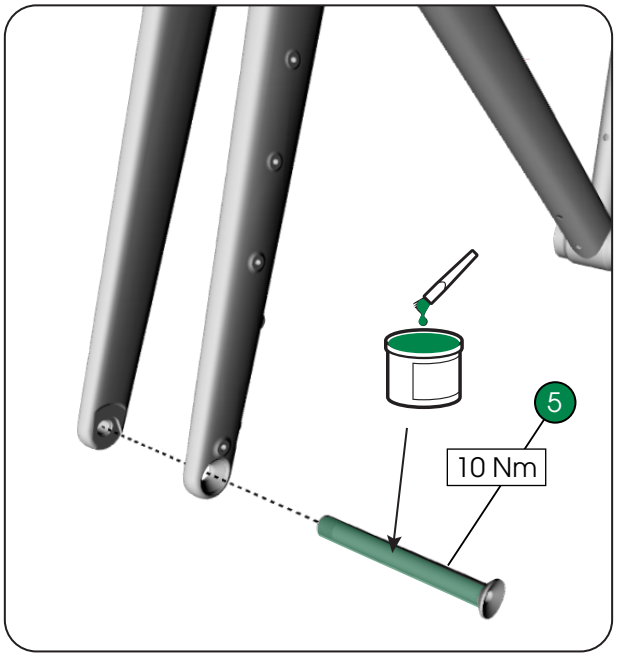

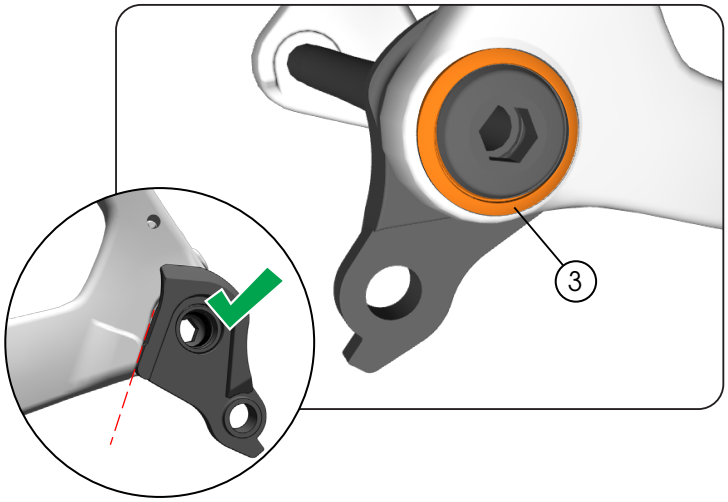

1. Rear axle (M12 x 166 mm) — *W5312169*
2. Derailleur hanger
3. Washer (25 mm)
4. Fastener (M12 x 16 mm)

— *W5271424*

5. Front axle (M12 x 119.5 mm) — *W5312168*
6. Switch lever (black) — **W5312899*

**color-matched part — see Trekbikes.com for full list*

Chainkeeper

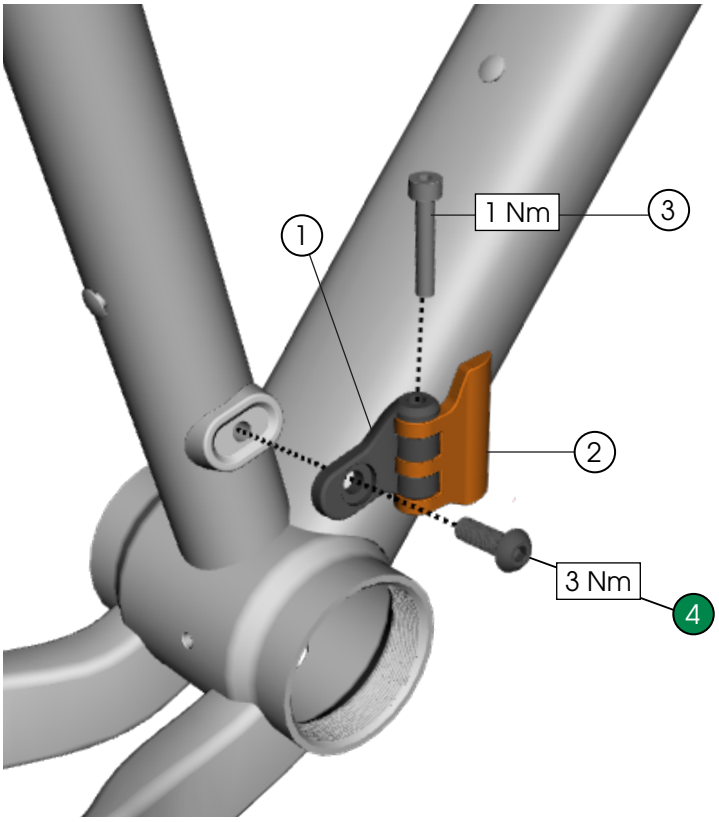

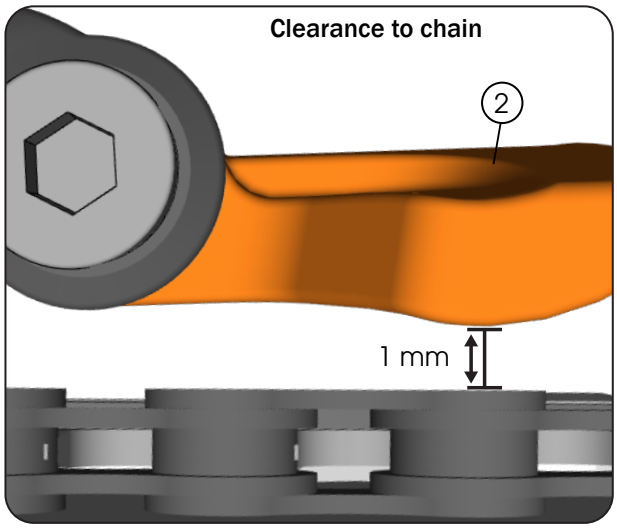

Low position
chainring 30T-40T



High position
chainring 34T-44T

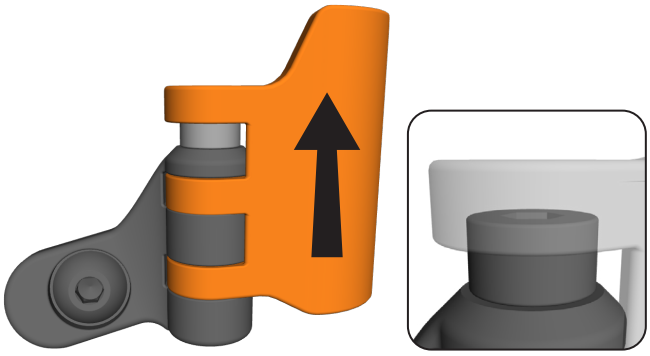

1. Base
2. Tab
3. Fastener (M4 x 22 mm) — *5320962*
4. Fastener (M5 x 16 mm) — *5328801*

Front brake mount adapter

WARNING

Risk of injury or death due to incorrect brake mounting

Correctly orient the brake mount adapter so that the brake pads align fully with rotor. Improper installation of brake mount adapter can result in brake failure, loss of control, and injury or death.

Front	160 mm rotor	180 mm rotor

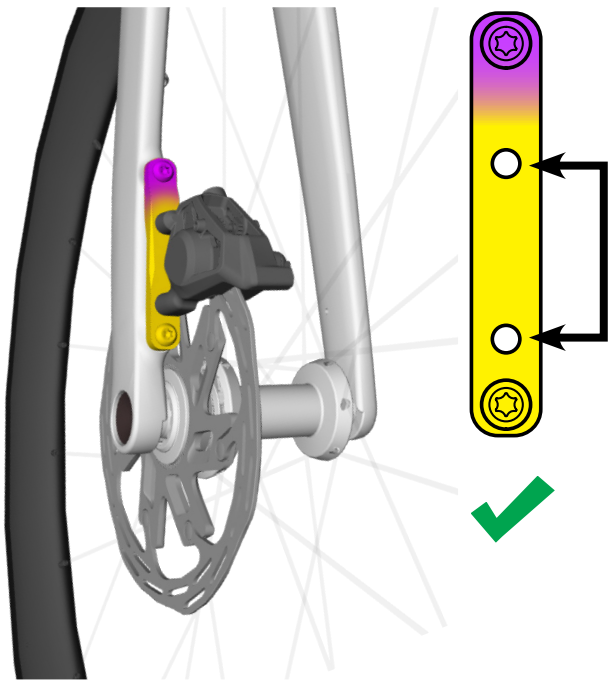

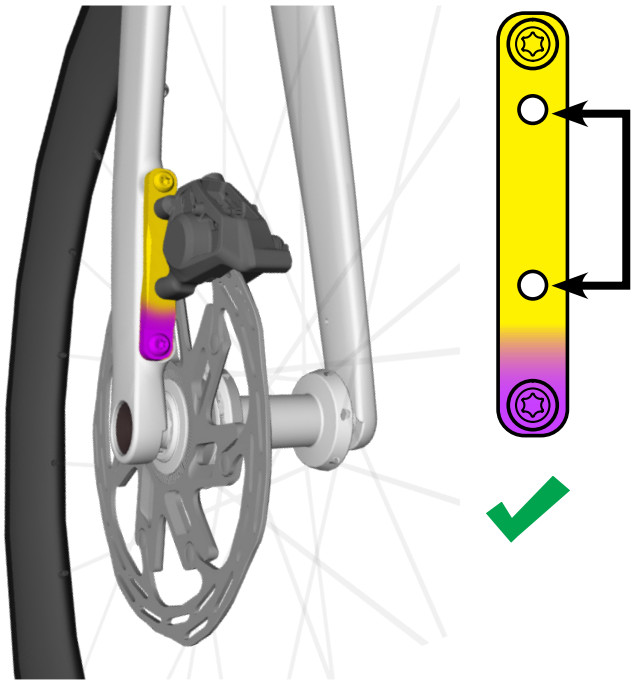

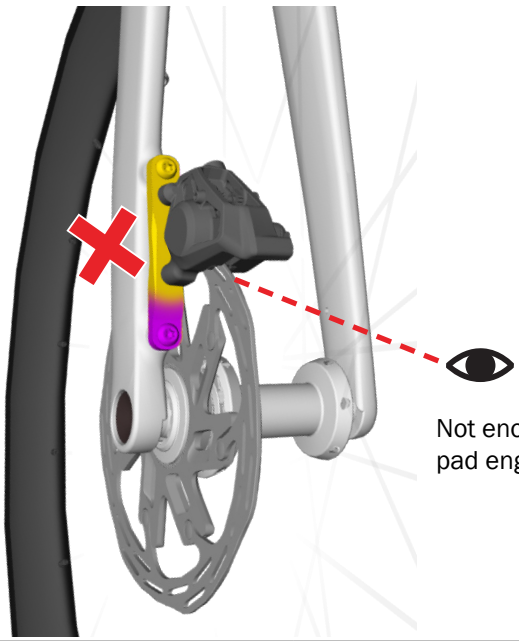

Not enough brake pad engagement

Specifications

Frame

		Checkpoint
Hub OLD	Front	100 mm
	Rear	142 mm
Fork steerer tube OD	Upper	28.6 mm
	Lower	38.8 mm
Bottom bracket type/width		T47/85.5 mm
Brake rotor diameter min/max	Front	160/180 mm
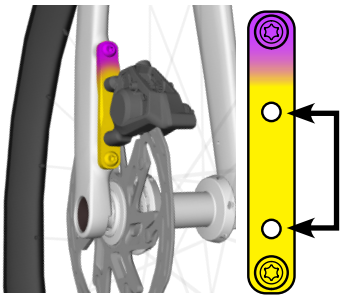 **160 mm** 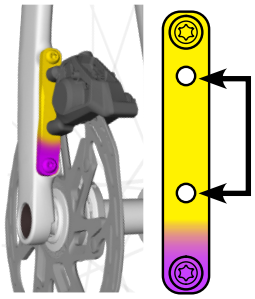 **180 mm**		
Brake rotor diameter min/max	Rear	160/180 mm
Chainstay brake mount thickness		25 mm
Tire width max 700c	Without fender	*50 mm (1X) / *45 mm (2X)
	With fender	*42 mm
Fender compatible	Rear	Yes
	Front	Yes
Dropper post compatible		Yes

**as measured when the tire is seated on the rim*

Chainline/chainring

	Chainline	Max chainring teeth (T)		
		Small	Large	Single (1x)
Shimano GRX	47 mm	–	–	44T
		30T	48T	–
SRAM Wide	47.5 mm	–	–	44T
		30T	46T	–

Brake hose lengths

NOTE: The lengths below are based on a 44 cm handlebar with a 100 mm stem and 40 mm of headset spacers.

Frame size	Rear brake	Front brake
ALL	1,500 - 1,700 mm	800–1,000 mm

Shift housing lengths

NOTE: The lengths below are based on a 44 cm handlebar with a 100 mm stem and 40 mm of headset spacers.

Frame size	Rear derailleur	Front derailleur
All	1,700	1,000

Seatpost

WARNING

Always follow the seatpost manufacturer's minimum insertion recommendation. Failure to follow the recommendation could cause damage to the seatpost and result in injury to the rider.

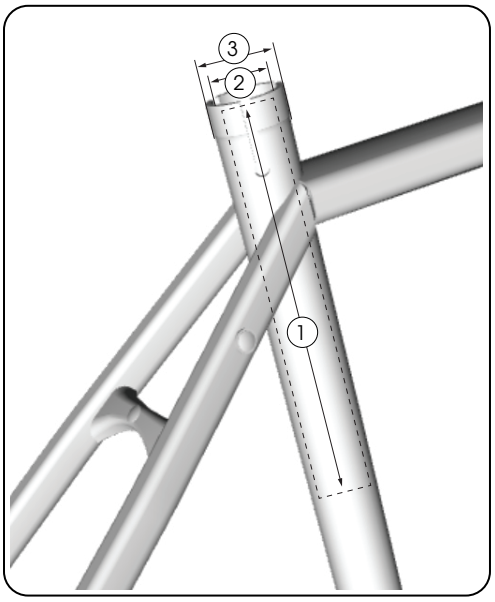

① **Maximum insertion**	**XS**	249 mm
	S	284 mm
	M	245 mm
	M-L	270 mm
	L	290 mm
	XL	315 mm
② **Seatpost OD**	27.2 mm	
③ **Seatpost clamp ID**	31.8 mm	