

2025 CHECKMATE

SERVICE MANUAL

Contents

Routing


Routing — Di2 (12 speed)


Routing — Di2 (12 speed): instructions


Routing — Di2 (11 speed)


Routing — Di2 (11 speed): instructions


Routing — AXS


Routing — AXS: instructions

Headset


RCS Race


RCS Pro


RCS Universal


RCS Race headset

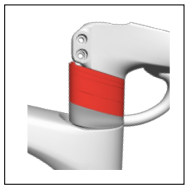
RCS Race spacers

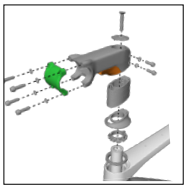
RCS Pro headset

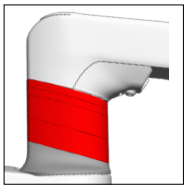
RCS Pro spacers

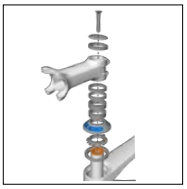
RCS Universal headset

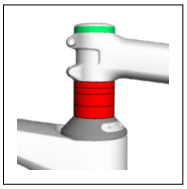
RCS Universal spacers

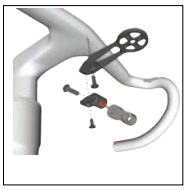
Blendr base

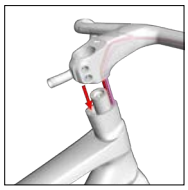
Install the RCS Race

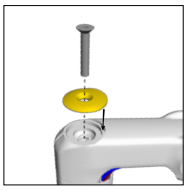
Install the RCS Pro

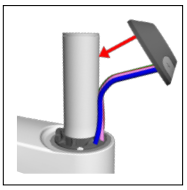
Install the RCS Universal

Frame


Seatpost

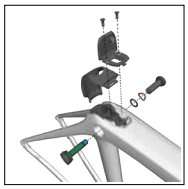
IsoSpeed

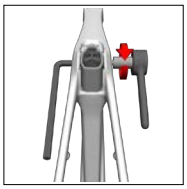
Service the IsoSpeed

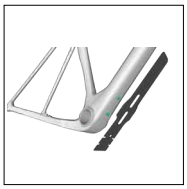
Frame guard

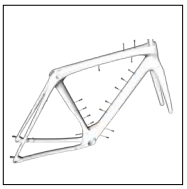
Frame mounts

Front brake mount adapter

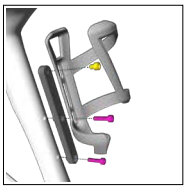
Bottle cage adapters

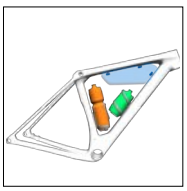
Frame triangle bags

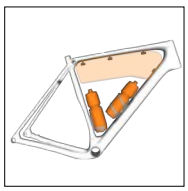
Adventure bag

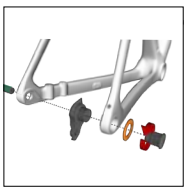
Universal derailleur hanger (UDH) and axles

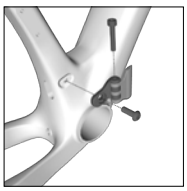
Chainkeeper

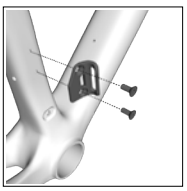
Front derailleur hanger


Specifications

Copyright 2024 Trek Bicycle Corporation All Rights Reserved

About this manual

Scope

This manual contains parts diagrams, specifications (such as grease and torque values), instructions, part numbers, and helpful tips. It does not contain instructions for all components (such as brake calipers). Refer to the original manufacturer for more information.

Replacement parts

Trek recommends using only Trek OEM (original manufacturer) replacement parts.

Additional info

The Owner's Manual is available at Trekbikes.com/manuals.

Inspect the bike

Please inspect the bicycle carefully after removal from the box and all packaging:

- Inspect all surfaces of the bicycle for damage, pay special attention to the fork legs and the seat stays (both inside and outside surfaces).
- If packaging damage is located near the front of the bicycle, remove the fork from the frame and inspect the steerer tube for damage.

Legend

★ Cable (zip) tie

Nm Torque value

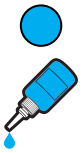
Apply appropriate threadlocker


Apply Bontrager grease

Safety

WARNING

Properly tighten hardware

Always tighten hardware to the specified torque. Over-tightening hardware could deform or break the hardware or components. Under-tightening or over-tightening hardware could cause hardware or components to become loose. Either situation could damage the bicycle and result in injury to the rider.

WARNING

Reapply threadlocker

All reused-fasteners with pre-applied threadlocker must be cleaned with isopropyl alcohol and have new threadlocker applied before re-assembly. If threadlocker is not applied, the fasteners may loosen which could damage the bicycle and result in injury to the rider.

Routing — Di2 (12 speed)

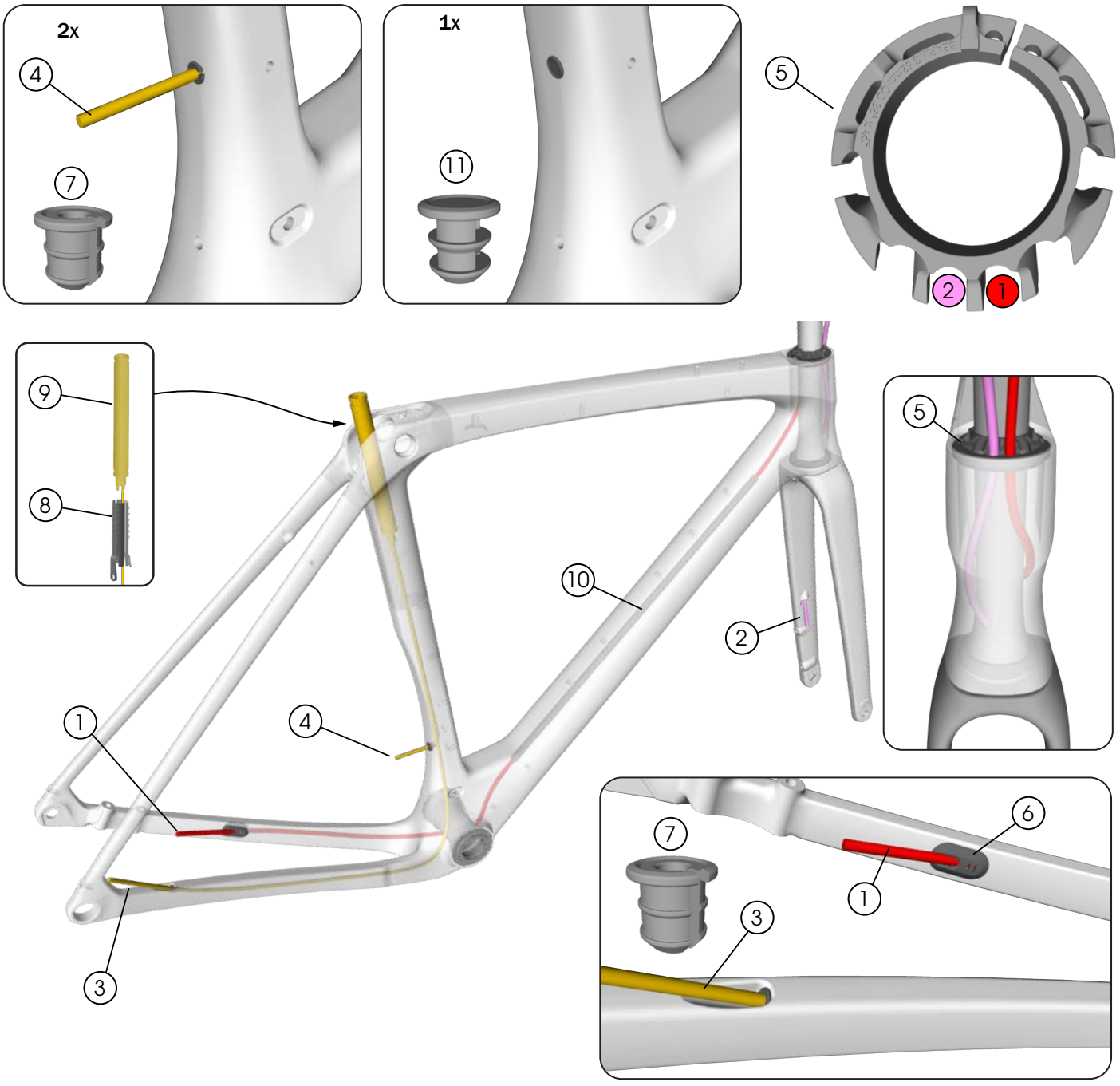

1. Rear brake hose
2. Front brake hose
3. Rear Di2 wire (1200 mm) — **EW-SD300-I*
4. Front Di2 wire (750 mm) — **EW-SD300-I*
5. Split ring — *W5315339*
6. Housing grommet — *W330578*
7. Wire grommets — *W600208*
8. Battery holder — *W5290297*
9. Battery — **BT-DN300*
10. Housing sleeve — *W528082*
11. Hole plug — *W600209*

**Shimano part number*

Routing — Di2 (12 speed): instructions

1. Route the rear brake hose through the frame. Route the front brake hose through the fork.

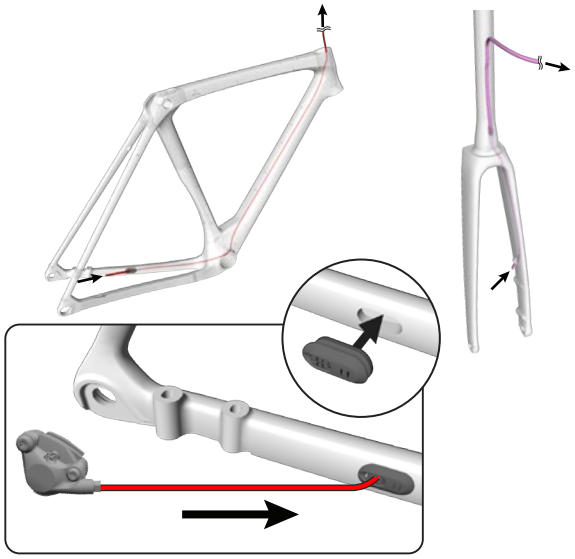

2. Route two Di2 wires through the frame to the seat tube and connect them to the battery.

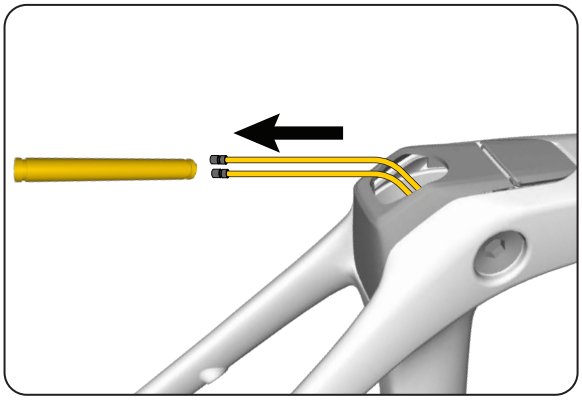

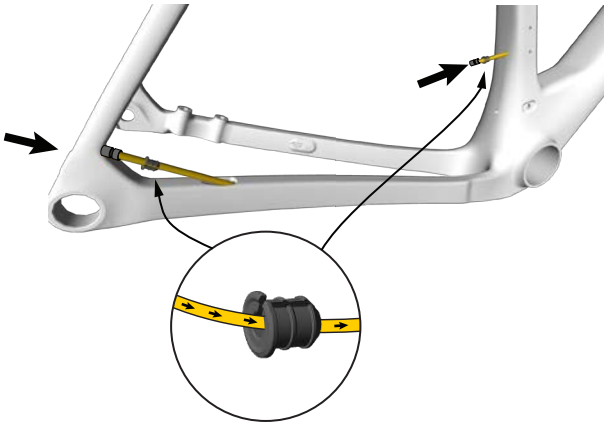

3. Place the battery holder around the battery and insert the assembly into the seatpost.

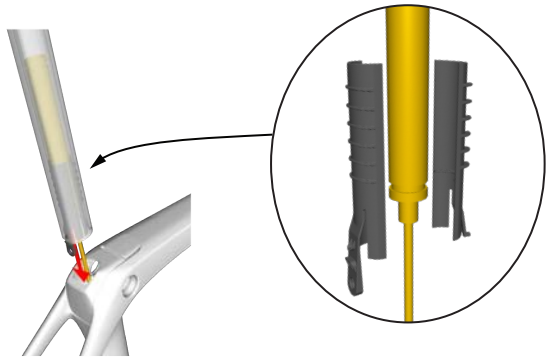

4. Route the housing sleeve over the rear brake housing until the sleeve is inside the head tube.

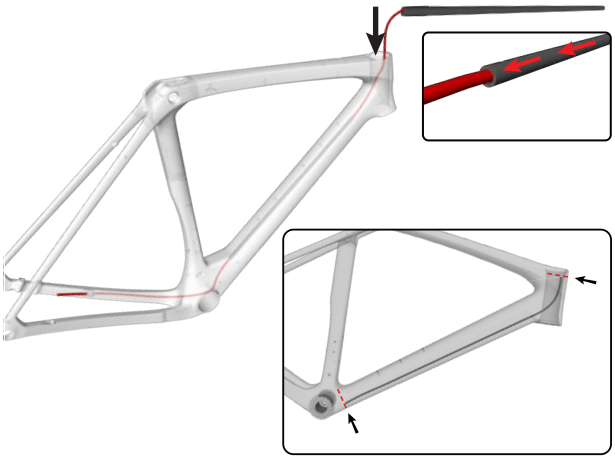

5. Install the bottom bracket above the rear brake hose and below the Di2 wires.

   NOTE: This frame was designed to route the housings below the bottom bracket. When servicing, you can remove the bottom bracket and route the housing above it to get more slack at the handlebar.

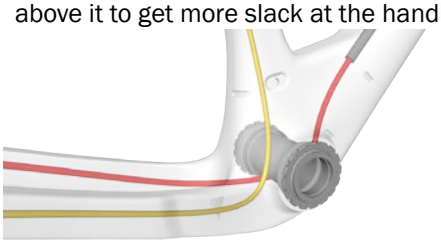

6. Install the headset and stem following one of the procedures below (depending on your stem system):
   - RCS Race headset
   - RCS Pro headset
   - RCS Universal headset

Routing — Di2 (11 speed)

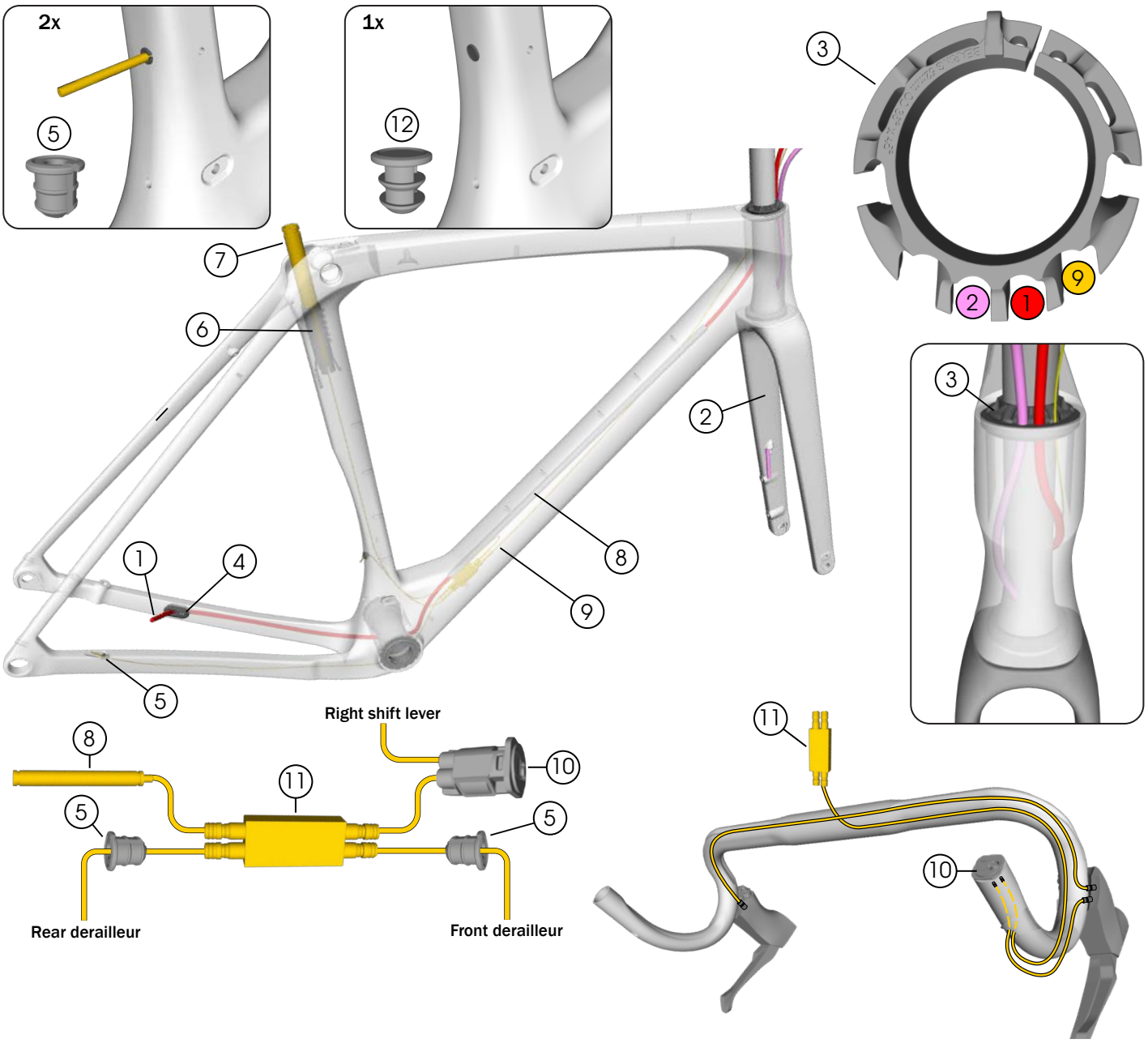

1. Rear brake hose
2. Front brake hose
3. Split ring — *W5315339*
4. Housing grommet — *W330578*
5. Wire grommets — *W600208*
6. Battery holder — *W5290297*
7. Battery — **BT-DN110-A*
8. Housing sleeve — *W528082*
9. Di2 wires
10. Junction A — **EW-RS910*
11. Junction B — **SM-JC41*
12. Hole plug — *W600209*

**Shimano part number*

Routing — Di2 (11 speed): instructions

1. Route the rear brake hose through the frame. Route the front brake hose through the fork.

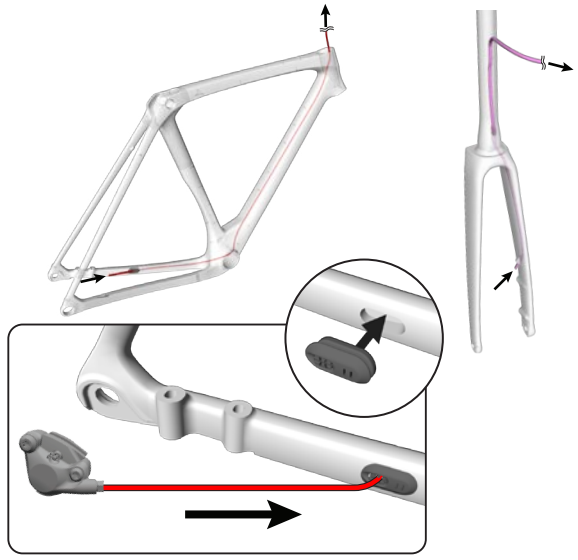

2. Route four Di2 wires through the frame as shown below. Then connect the wires to the battery and the Junction B.

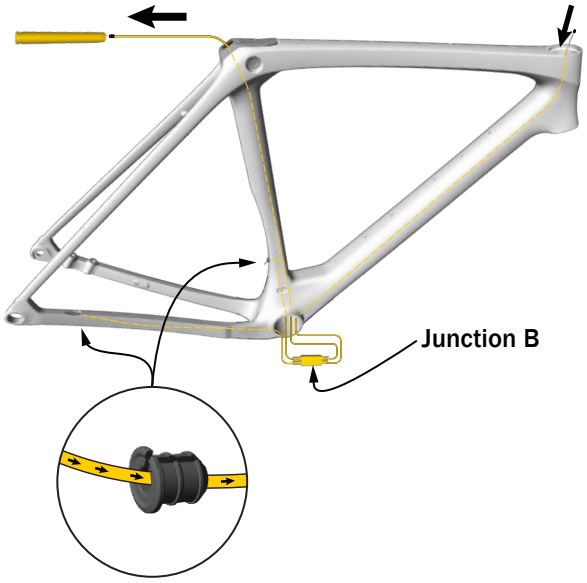

3. Place the battery holder around the battery and insert the assembly into the seatpost.

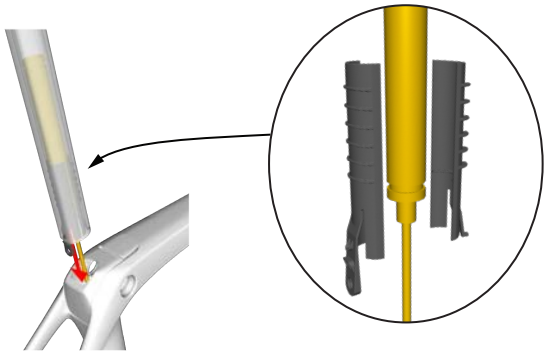

4. Route the housing sleeve over the rear brake housing until the sleeve is inside the head tube.

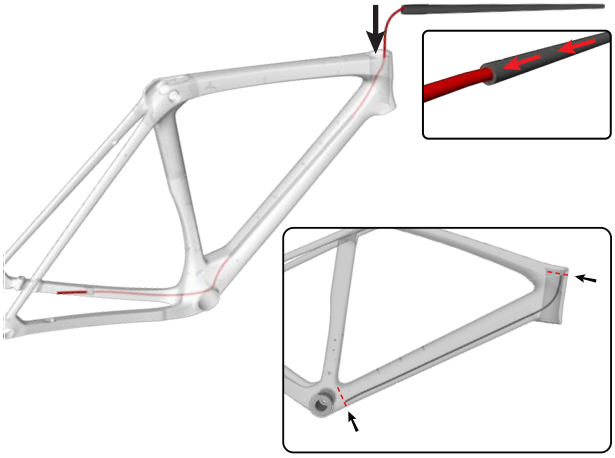

5. Insert the Junction B into the frame and install the bottom bracket above the rear brake hose and Di2 wire.

   NOTE: This frame was designed to route the housings below the bottom bracket. When servicing, you can remove the bottom bracket and route the housing above it to get more slack at the handlebar.



6. Install the headset and stem following one of the procedures below (depending on your stem system):
   - RCS Race headset
   - RCS Pro headset
   - RCS Universal headset

Routing — AXS

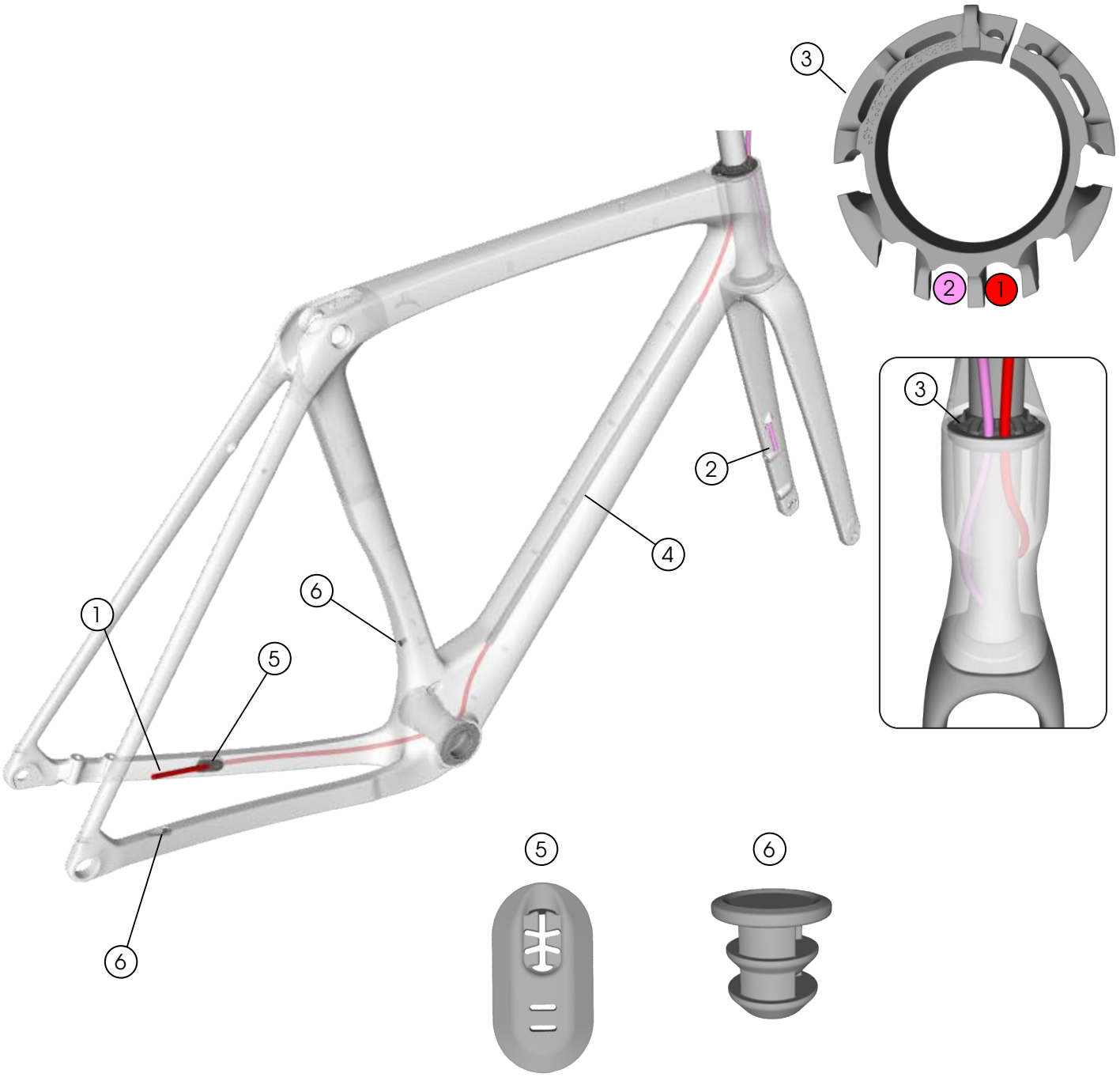

1. Rear brake hose
2. Front brake hose
3. Split ring — *W5315339*
4. Housing sleeve — *W528082*
5. Housing grommet — *W330578*
6. Hole plugs — *W600209*

Routing — AXS: instructions

1. Route the rear brake hose through the frame. Route the front brake hose through the fork.

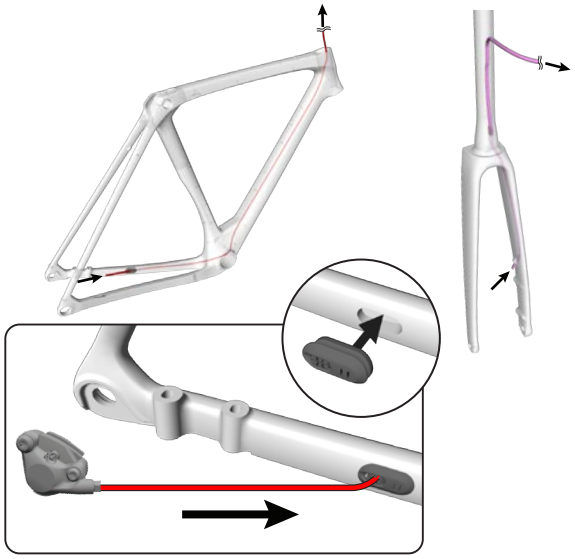

2. Route the housing sleeve over the rear brake housing until the sleeve is inside the head tube.

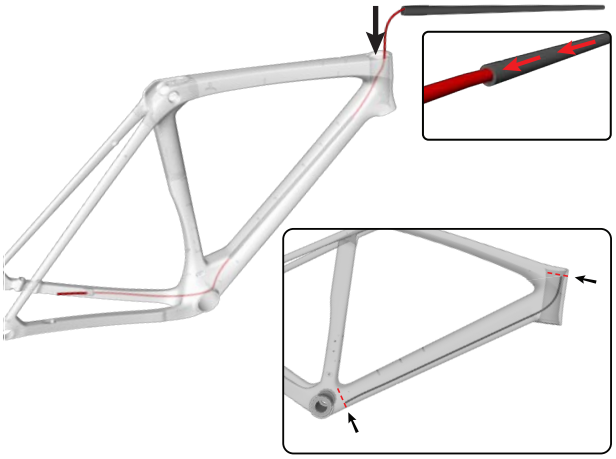

3. Install the bottom bracket above the rear brake hose.

   NOTE: This frame was designed to route the rear brake hose below the bottom bracket. When servicing, you can remove the bottom bracket and route the hose above it to get more slack at the handlebar.

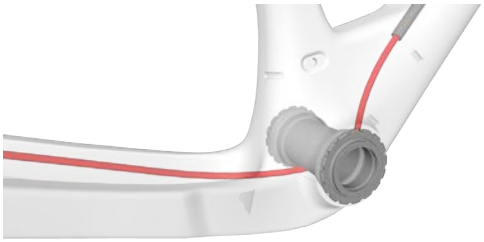

4. Install the headset and stem following one of the procedures below (depending on your stem system):
   - RCS Race headset
   - RCS Pro headset
   - RCS Universal headset

RCS Race headset

NOTE: The RCS Race headset is only compatible with electronic shifting.

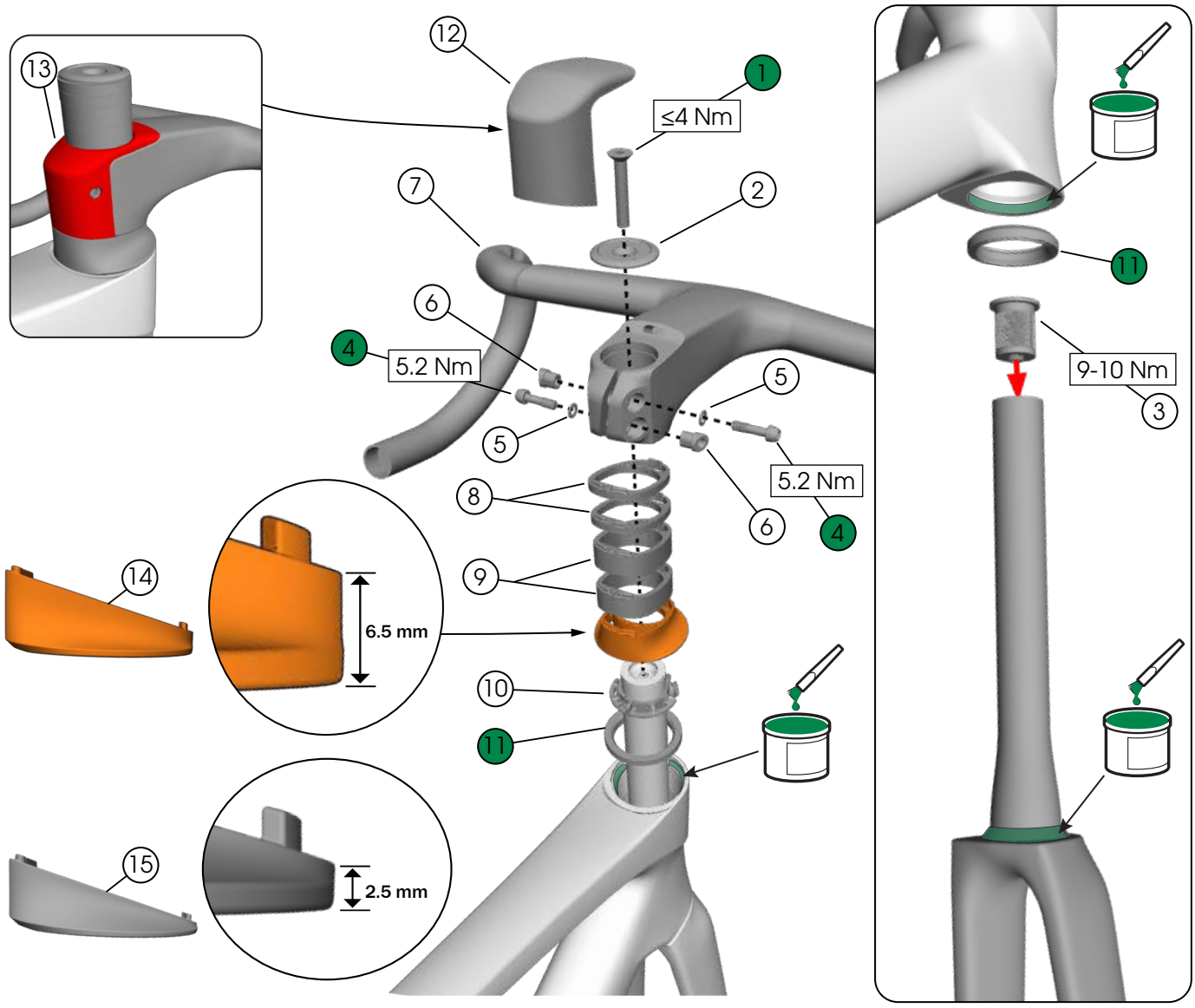

- 1 Fastener (M6 x 35 mm)
- 2 Top cap
- 3 Expander plug

— *W547432*

- 4 Fasteners (M5 x 18.5 mm)
- 5 Washers (M5)
- 6 D-nuts (M5)

— *5276082*

- 7 Aero RSL barstem (42 mm x 120 mm, -7°) — **W5316693*
- 8 Spacers (5 mm) — *W5316079*
- 9 Spacers (15 mm) — *W5316080*
- 10 Split ring — *W5315339*
- 11 Headset bearings — *W5322818*
- 12 Barstem cover — *W5316077*
- 13 Exposed barstem cover — *W5316078*
- 14 Bearing top cover — *W5316081*
- 15 Bearing top cover, low — *5325626*

**see Trekbikes.com for full product list*

RCS Race spacers

NOTE: If you remove spacers below the stem, you must add the same height of spacers above the stem or cut the steerer tube.

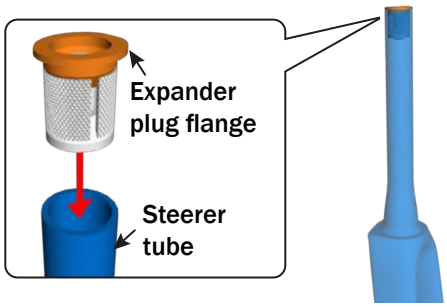

WARNING

Do not exceed 40 mm of headset spacers above or below the stem. If there are more than 40 mm of spacers, the steerer tube could become damaged and break, causing a crash resulting in injury.

Below stem

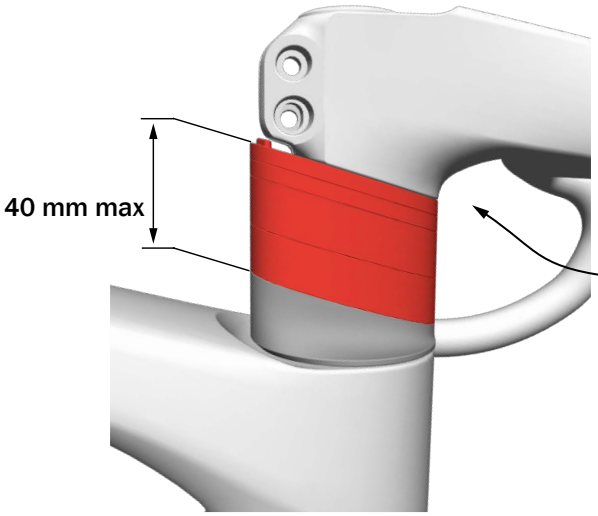

The expander plug flange must sit flush or slightly above (0-2 mm) the ridge inside the barstem.

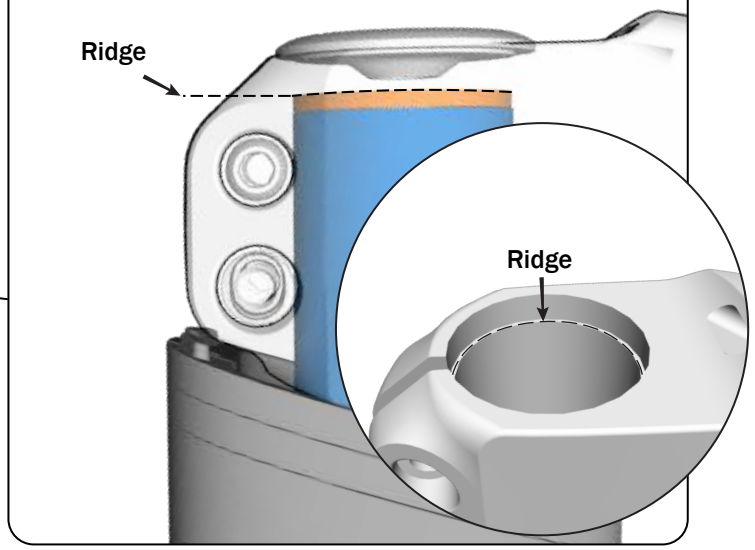

Above stem

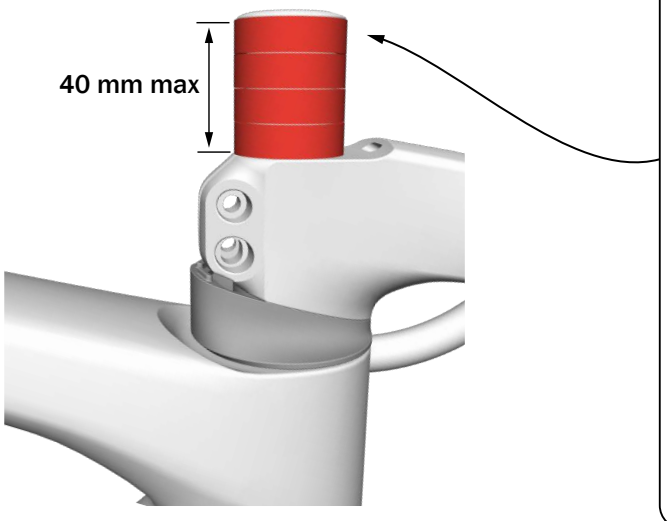

If there are any spacers above the stem, the expander plug flange must extend 3-4 mm into the top spacer.

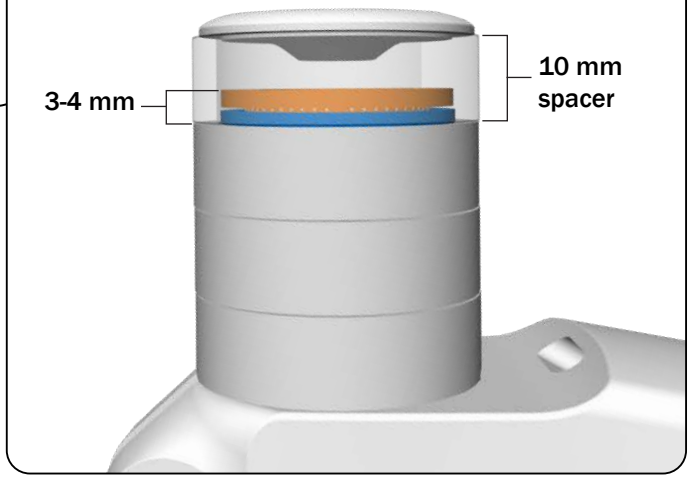

Blendr base

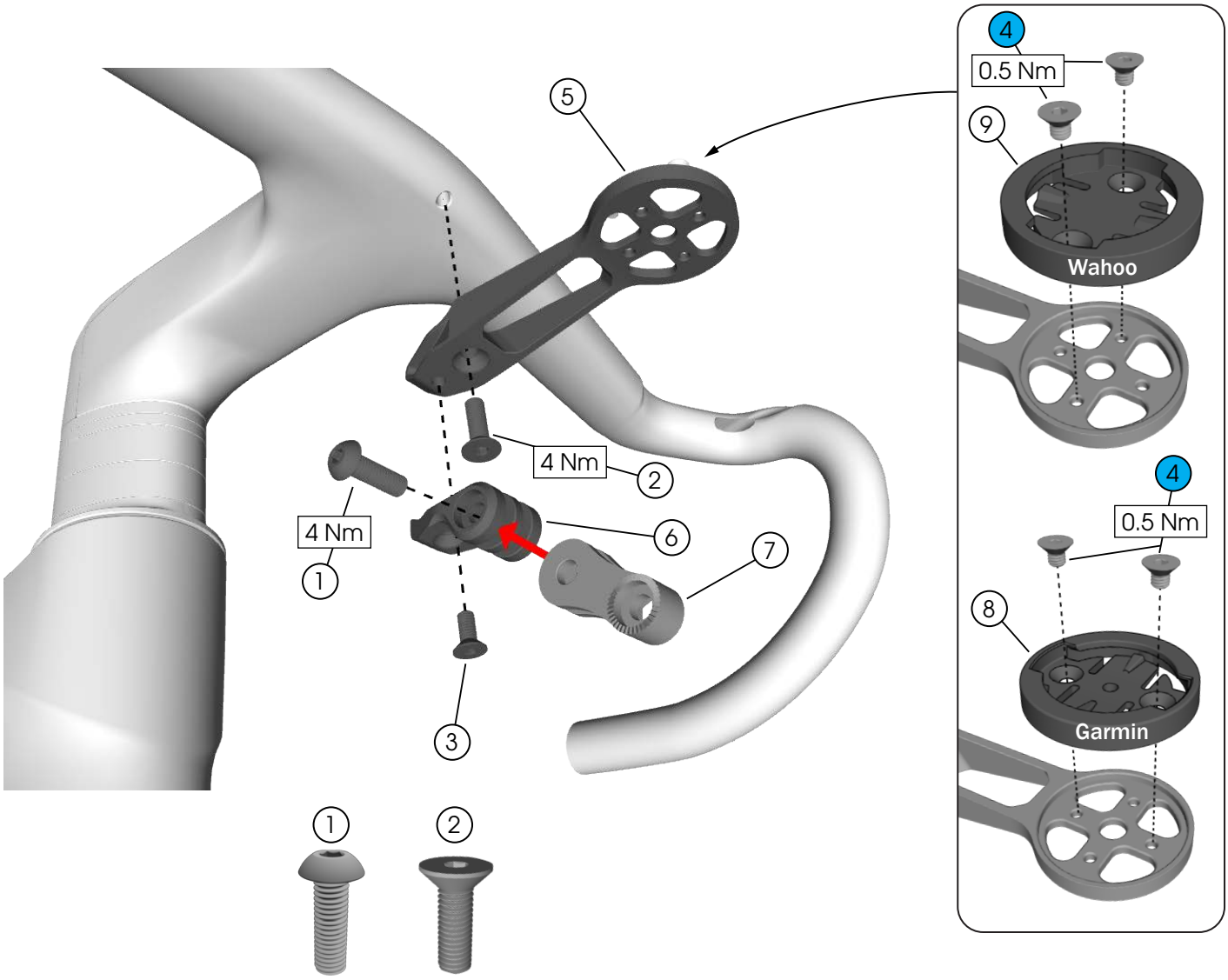

1. Fastener (M5 x 16 mm)
2. Fastener (M5 x 16 mm)
3. Fastener (M4 x 10 mm)
4. Fasteners (M3 x 2 mm)
5. Base
6. Knuckle

5325346

7. Reflector mount
8. Garmin puck — *5266373*
9. Wahoo puck — *5266374*

Install the RCS Race

Before you begin:

- Install derailleur(s) and brake calipers.
- Route all housings through the frame/fork and connect them to the derailleurs/calipers.
- Make sure the steerer tube is the correct length for the stack/spacer height (see RCS Race spacers).

1. Install the expander plug into the fork.

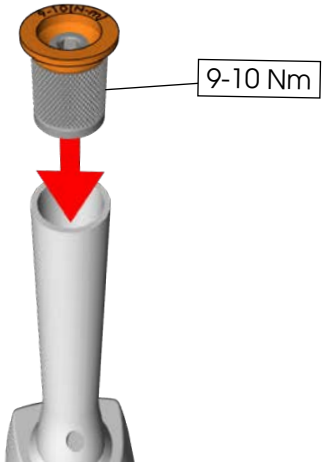

2. Grease the bearings and all mating surfaces.

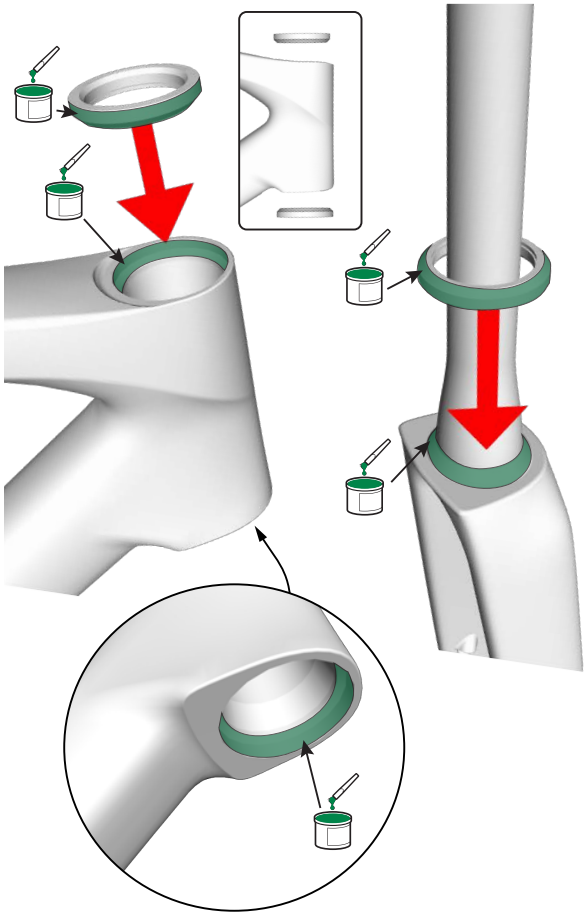

3. Insert the fork and front brake hose into the head tube.

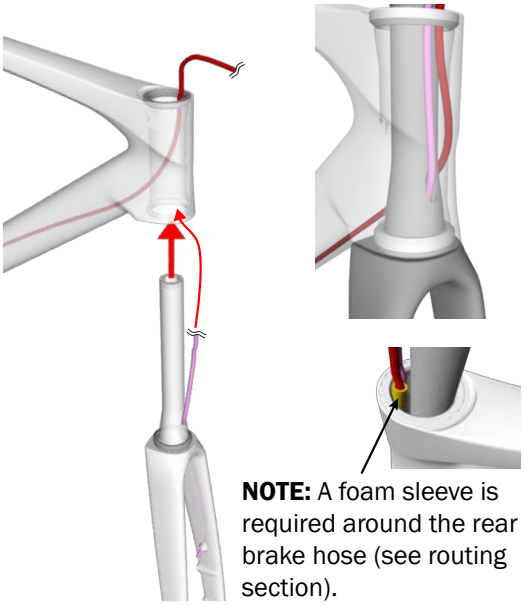

NOTE: A foam sleeve is required around the rear brake hose (see routing section).

4. Slide the split ring and bearing top cover down the steerer tube.

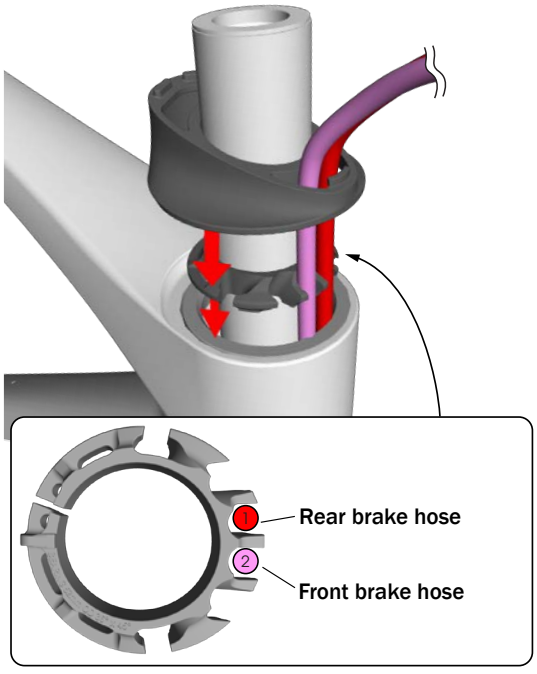

Install the RCS Race (continued)

5. Slide the spacers down the steerer tube. Then feed about 40 mm of the rear brake hose into the frame so the handlebar can turn freely.

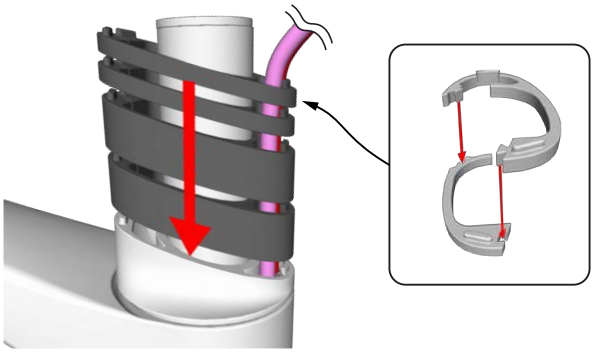

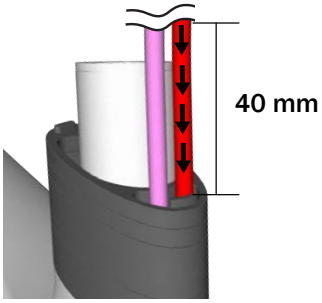

6. Route the brake hoses through the barstem using the pre-routed housing guides or an internal cable routing tool (such as Park Tool IR-1.3).

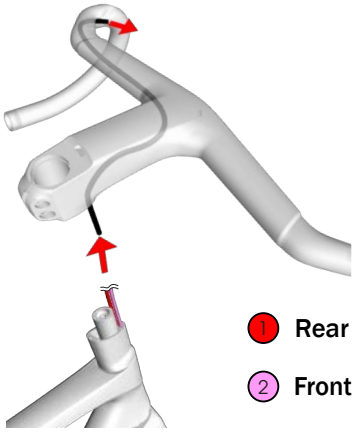

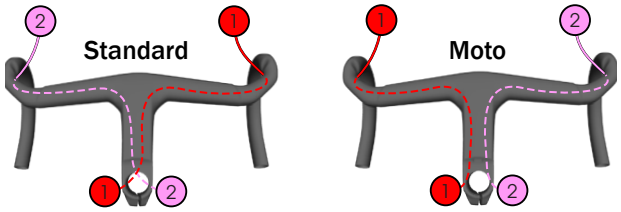

7. Slide the barstem down the steerer tube.

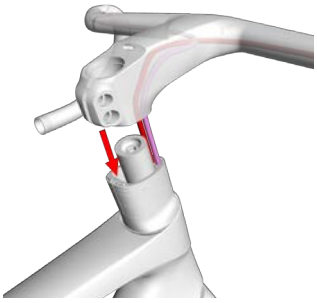



Before installing the barstem, attach the exposed cover if you plan to use it.

8. Install the top cap and top cap fastener.

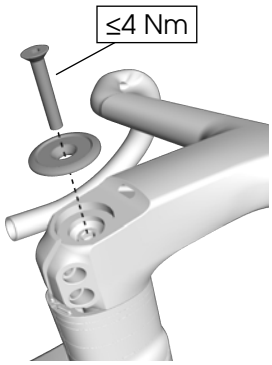



You may have spacers above the stem.

9. Tighten both stem fasteners — switching between them — until they are fully torqued.

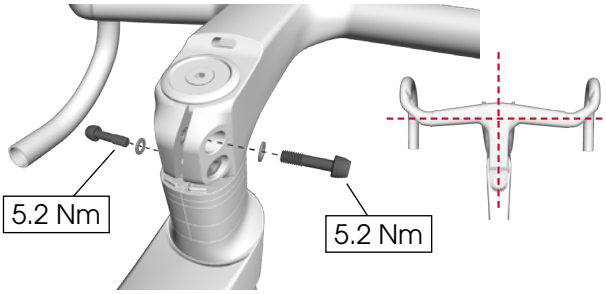

10. Install the barstem cover.

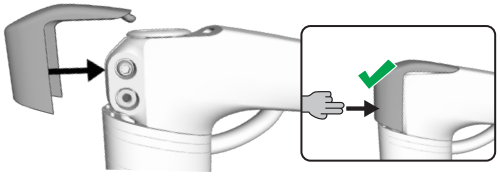



RCS Pro headset

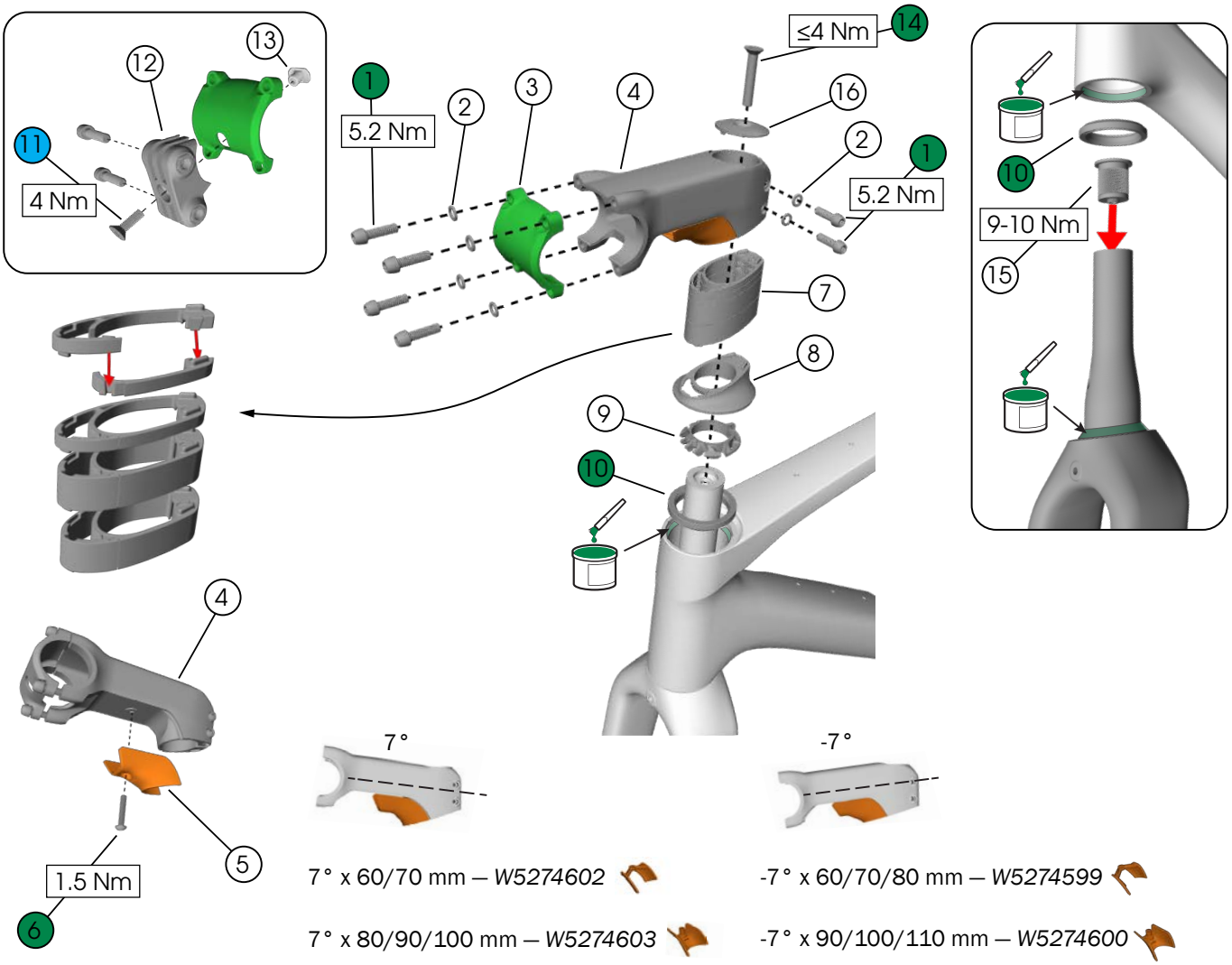

7° x 60/70 mm — *W5274602*

7° x 80/90/100 mm — *W5274603*

-7° x 60/70/80 mm — *W5274599*

-7° x 90/100/110 mm — *W5274600*

-7° x 120/130/140 mm — *W5274601*

1. Fasteners (M5 x 15 mm)
2. Washers (M5)
3. Faceplate
4. RCS Race stem (-7° x 100 mm)
5. Routing cover
6. Fastener (M4 x 25 mm)

**5274584*

7. Spacers
   - 5 mm — *5296906*
   - 15 mm — *5296905*
8. Bearing top cover — *W5317347*
9. Split ring — *W5315339*
10. Bearings — *W5322818*
11. Fastener (M5 x 12 mm)
12. Duo Blendr base
13. Nut

W5274964

14. Fastener (M6 x 35 mm)
15. Expander plug

W547432

16. RCS Pro top cap — *W5274966*

**see Trekbikes.com for full product list*

RCS Pro spacers

NOTE: If you remove spacers below the stem, you must add the same height of spacers above the stem or cut the steerer tube.

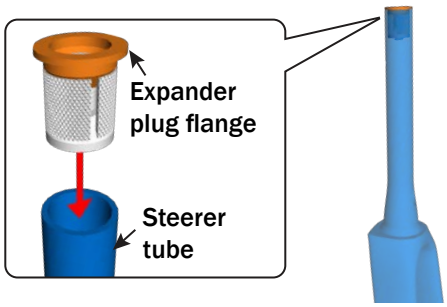

> **WARNING**
>
> Do not exceed 40 mm of headset spacers above or below the stem. If there are more than 40 mm of spacers, the steerer tube could become damaged and break, causing a crash resulting in injury.

Below stem

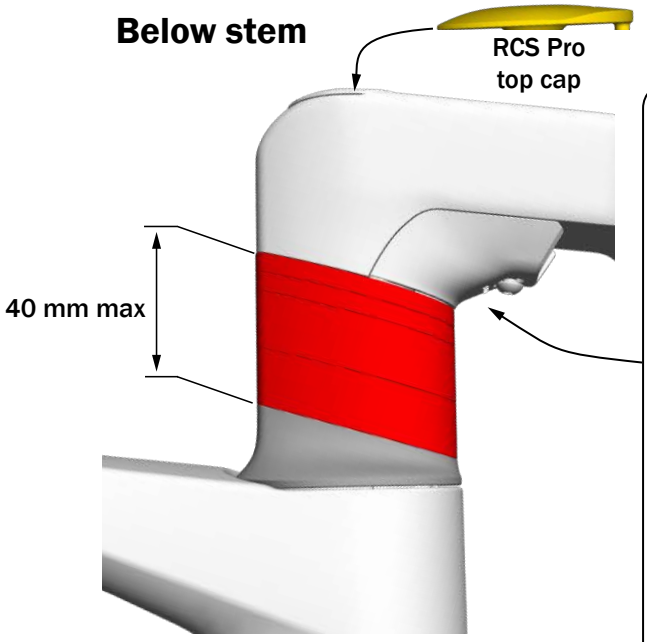

The expander plug flange must sit flush or slightly above (0-2 mm) the ridge inside the barstem.

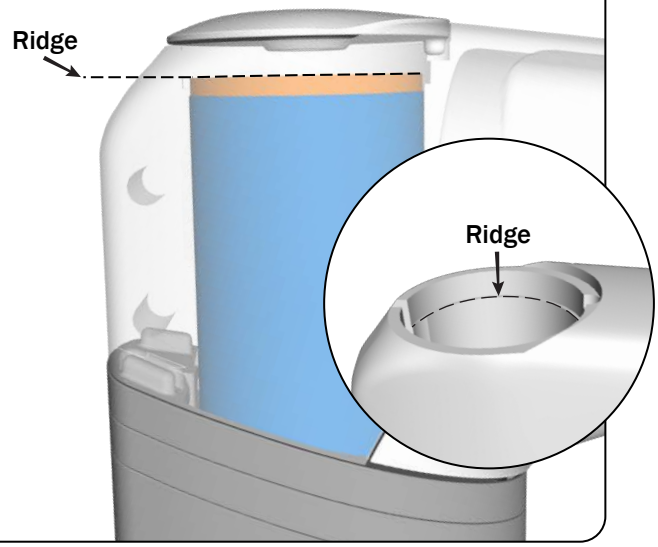

Above stem

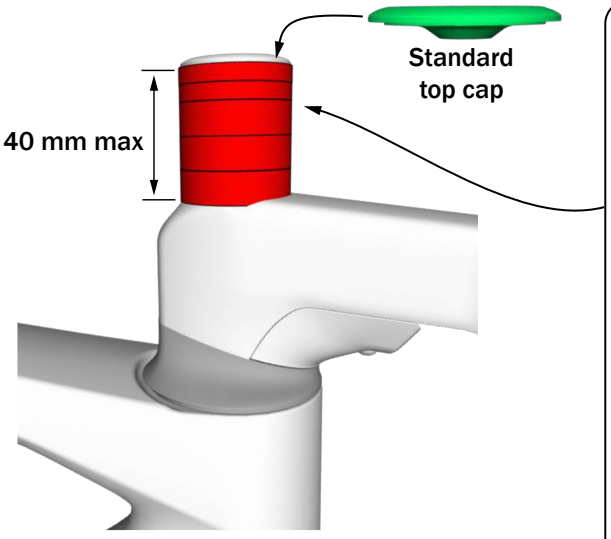

If there are any spacers above the stem, the expander plug flange must extend 3-4 mm into the top spacer.

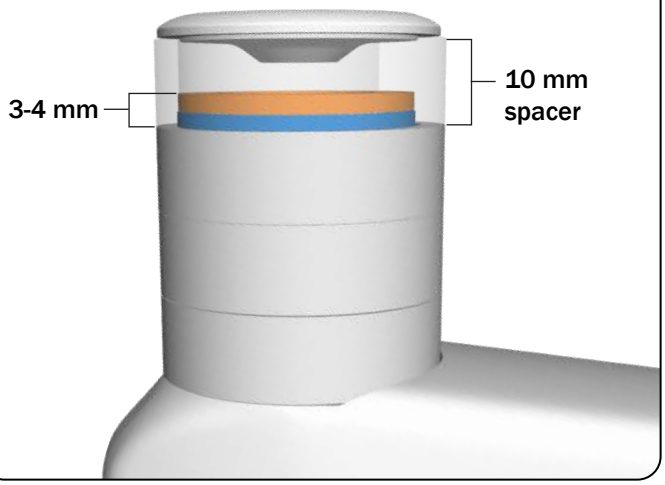

Install the RCS Pro

Before you begin:

- Install derailleur(s) and brake calipers.
- Route all cables/hoses through the frame/fork and connect them to the derailleurs/calipers.
- Make sure the steerer tube is the correct length for the stack/spacer height (see RCS Pro spacers).

1. Install the expander plug into the fork.

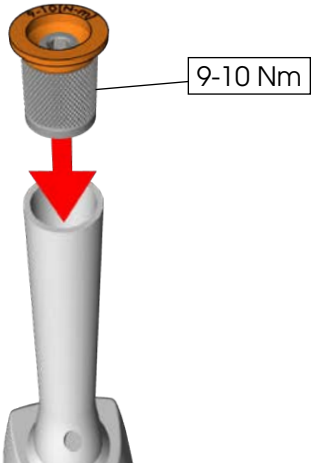

2. Grease the bearings and all mating surfaces.

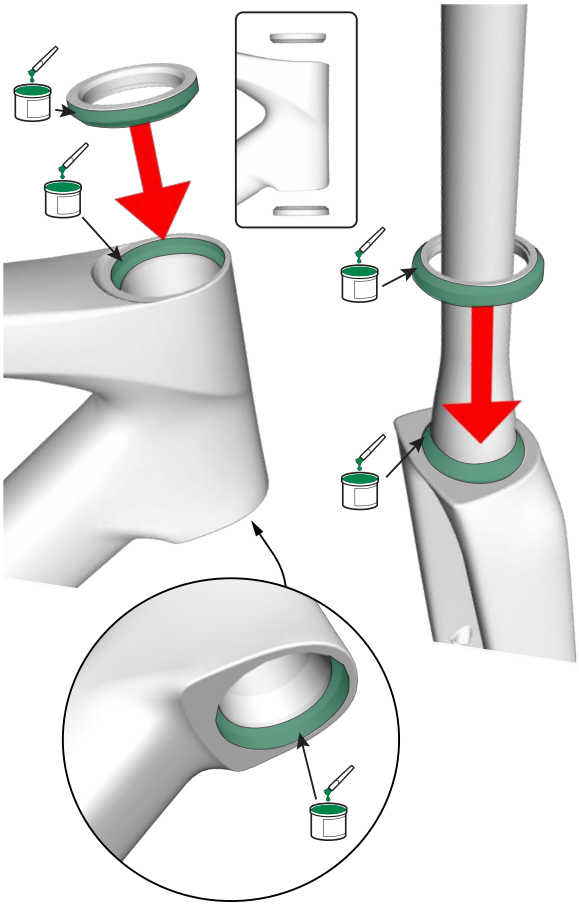

3. Insert the fork and front brake hose into the head tube.

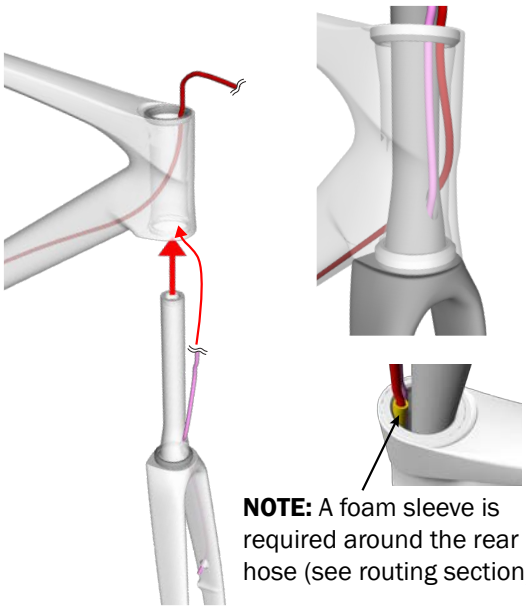

NOTE: A foam sleeve is required around the rear brake hose (see routing section).

4. Slide the split ring and bearing top cover down the steerer tube.

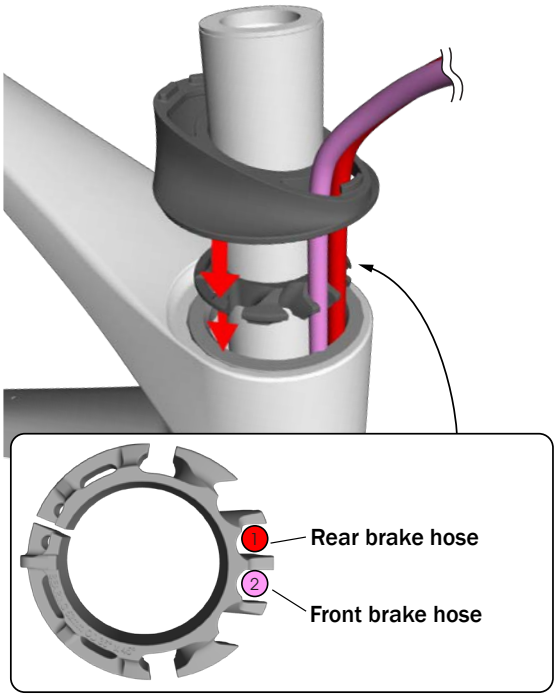

Install the RCS Pro (continued)

5. Slide the spacers down the steerer tube. Then feed about 40 mm of the rear brake hose into the frame so the handlebar can turn freely.

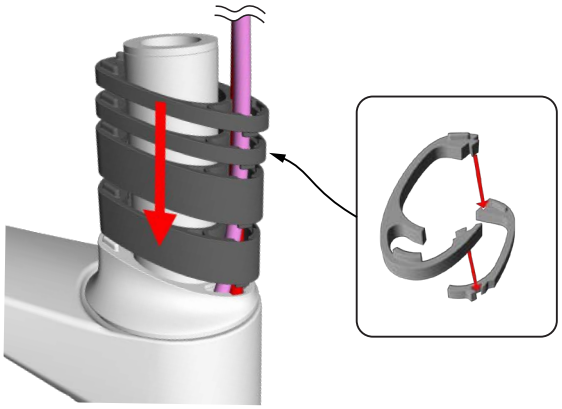

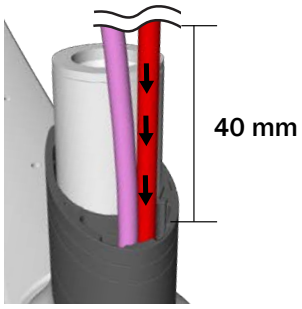

6. Slide the stem down the steerer tube.

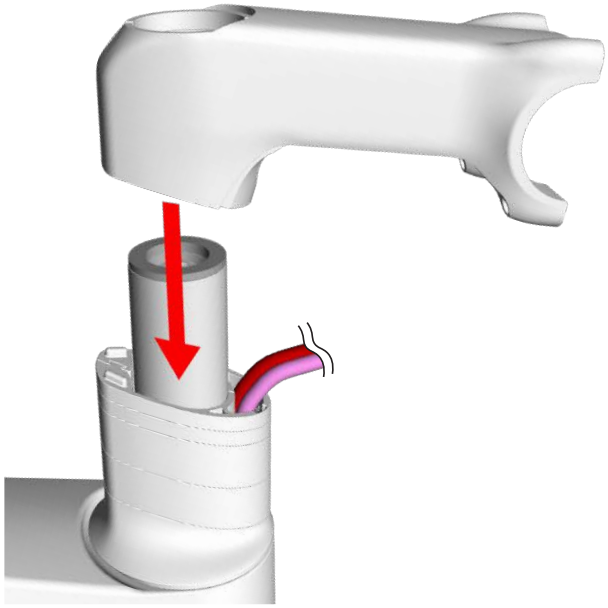

7. Install the top cap and top cap fastener.

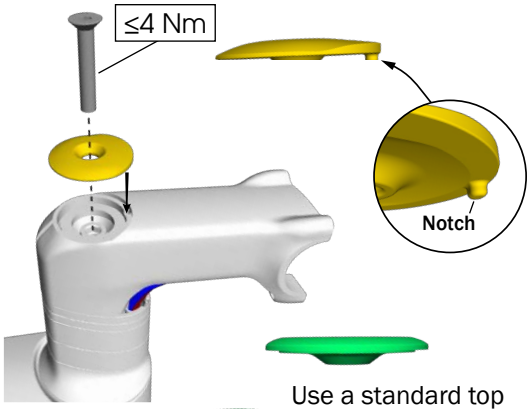

Use a standard top cap (no notch) if there are spacers above the stem.

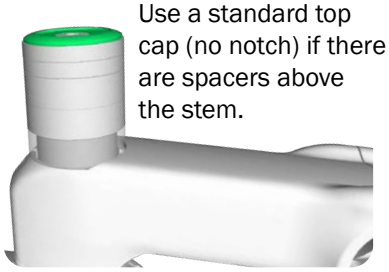

8. Loosely tighten the faceplate fasteners to secure the handlebar.

OPTIONAL: Attach the Blendr base to the faceplate before attaching the handlebar.

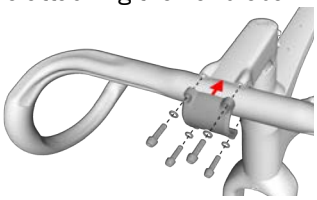

9. Fully tighten the top fasteners — switching between them — until they are both fully torqued. Repeat for the bottom two fasteners.

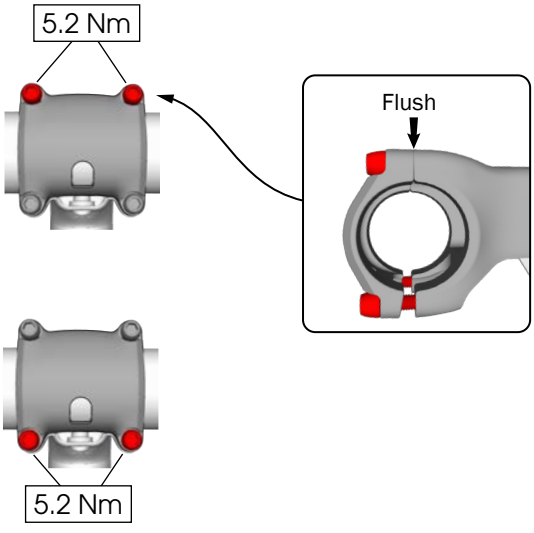

Install the RCS Pro (continued)

10. Tighten both stem fasteners — switching between them — until they are fully torqued.

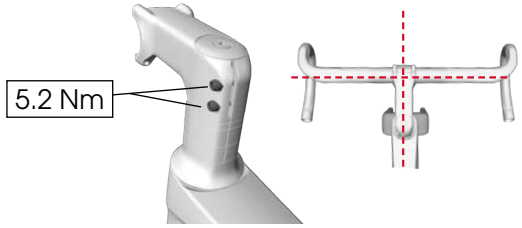

11. Insert the routing cover.

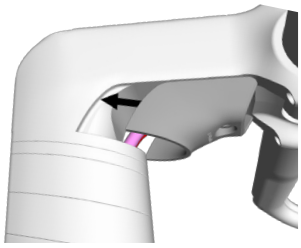

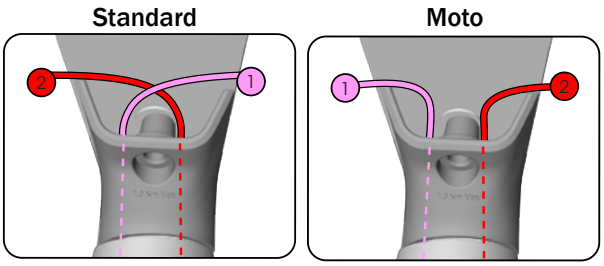

12. Install the fastener.

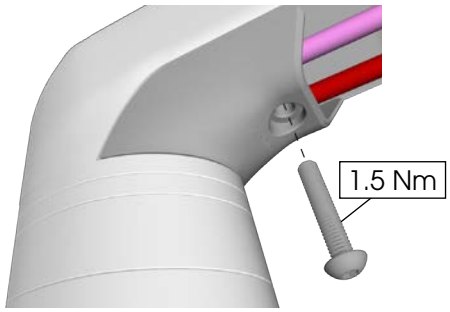

RCS Universal headset

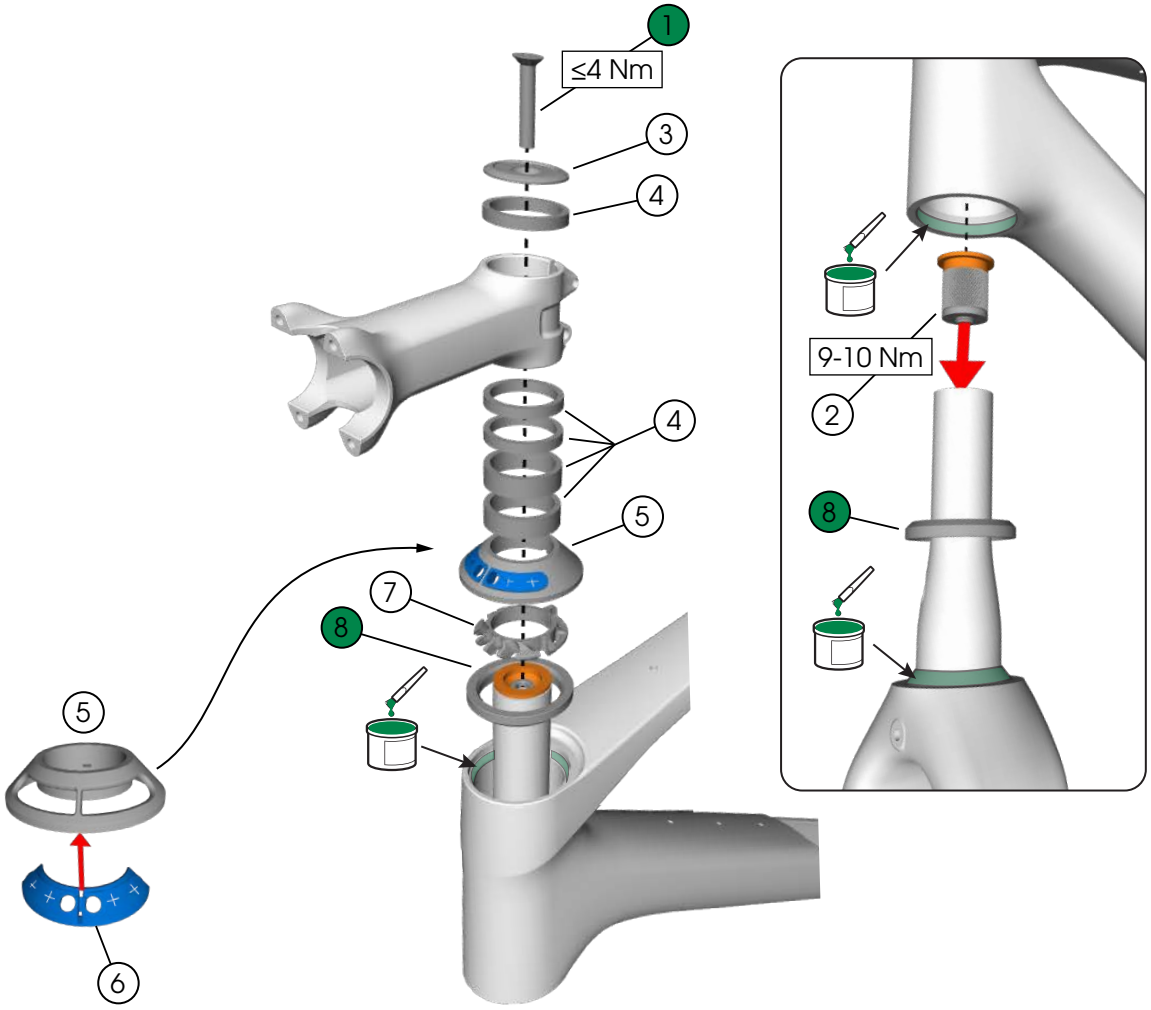

1. Fastener (M6 x 35 mm)
2. Expander plug
3. Top cap

W547432

4. Spacers (1-1/8" / 28.6 mm)

5 mm — *5253930*
10 mm — *5253931*

5. Bearing top cover
6. Bearing top cover grommet

5328901

7. Split ring — *W5315339*
8. Bearings — *W5322818*

RCS Universal spacers

NOTE: If you remove spacers below the stem, you must add the same height of spacers above the stem or cut the steerer tube.

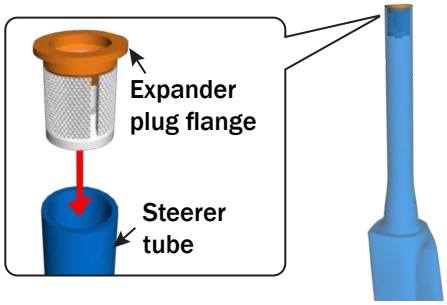

> **WARNING**
>
> Do not exceed 40 mm of headset spacers above or below the stem. If there are more than the maximum height of spacers, the steerer tube could become damaged and break, causing a crash resulting in injury.

Below stem

NOTE: Other stem types are compatible with this headset system. A spacer above the stem may not be required.

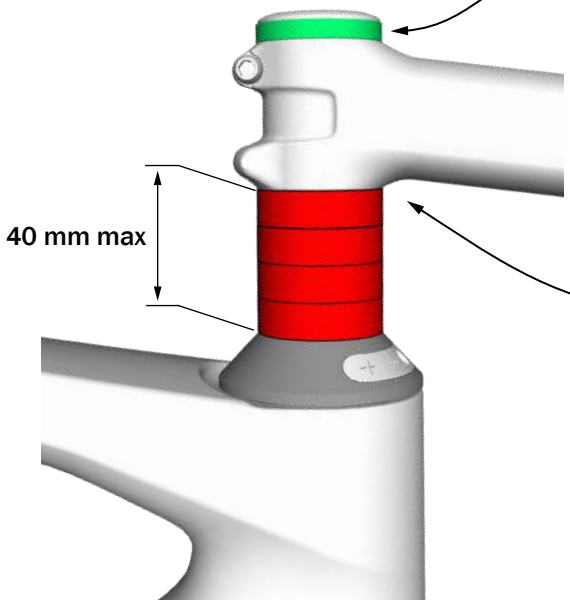

The steerer tube must sit flush or slightly below the top of the stem (0-2 mm).

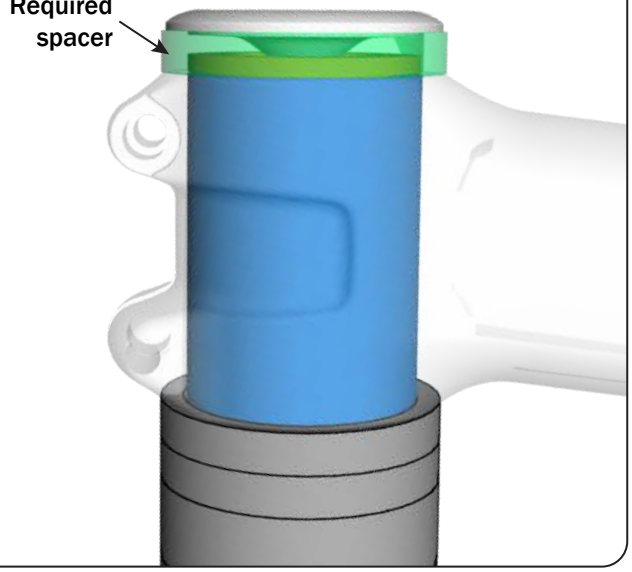

Above stem

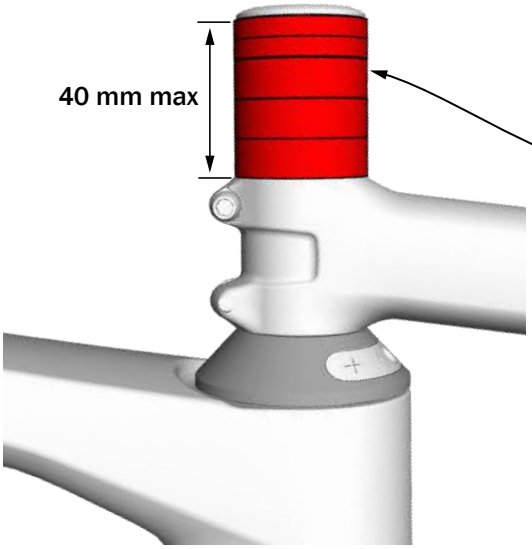

If there are any spacers above the stem, the expander nut flange must extend 3-4 mm into the top spacer.

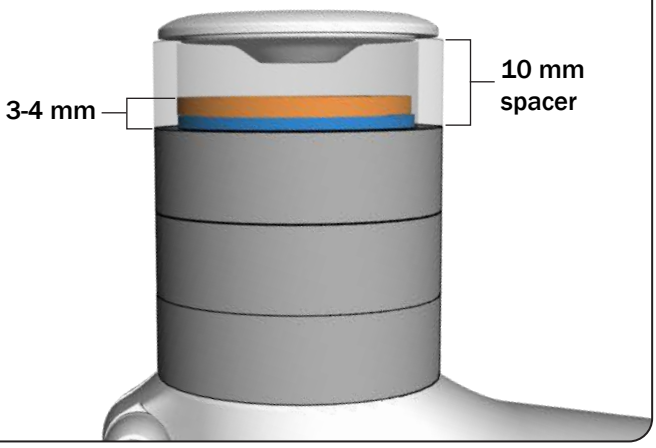

Install the RCS Universal

Before you begin:

- Install derailleur(s) and brake calipers.
- Route all cables/hoses through the frame/fork and connect them to the derailleurs/calipers.
- Make sure the steerer tube is the correct length for the stack/spacer height (see RCS Universal spacers).

1. Install the expander plug into the fork.

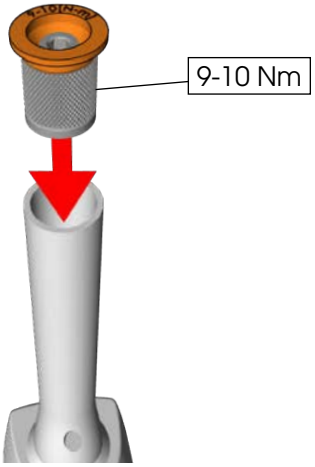

2. Grease the bearings and all mating surfaces.

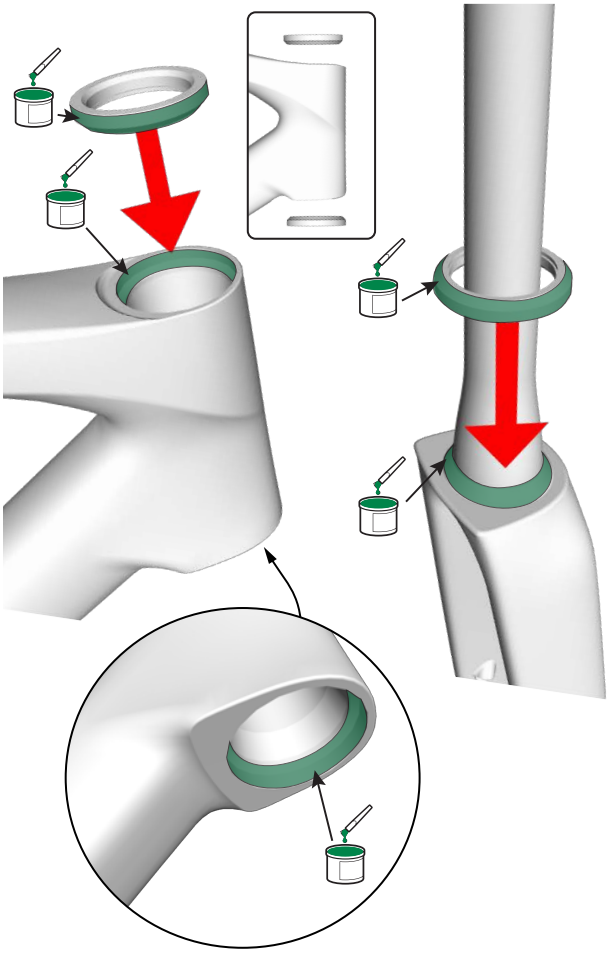

3. Insert the fork and front brake hose into the head tube.

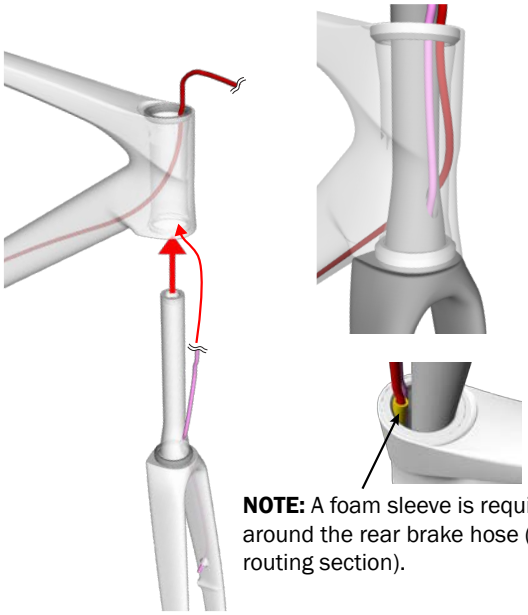

NOTE: A foam sleeve is required around the rear brake hose (see routing section).

4. Slide the split ring down the steerer tube.

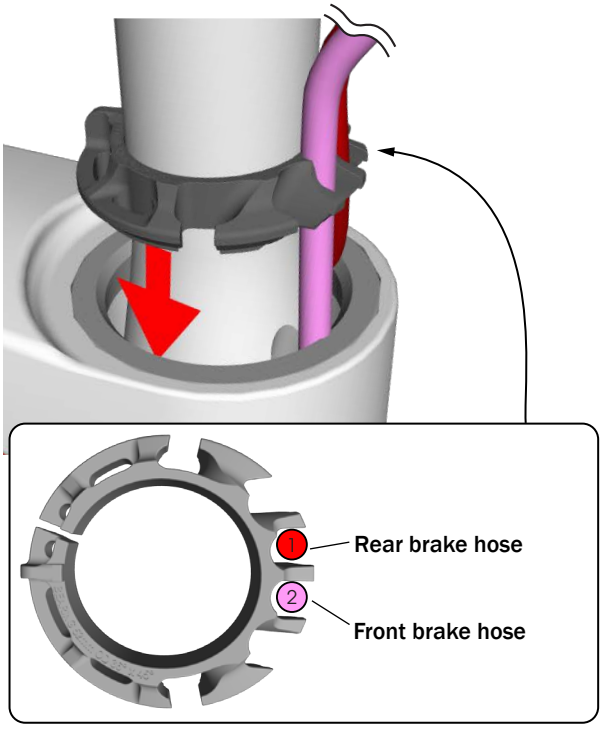

Install the RCS Universal (continued)

5. Route the brake hoses through the bearing top cover. Then slide the bearing top cover down the steerer tube.

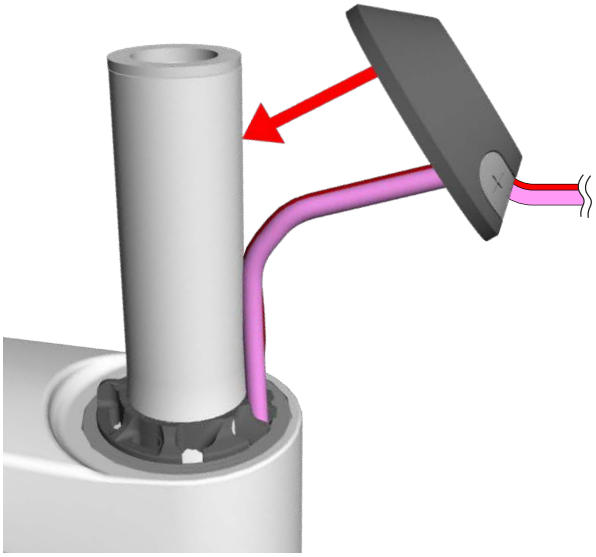

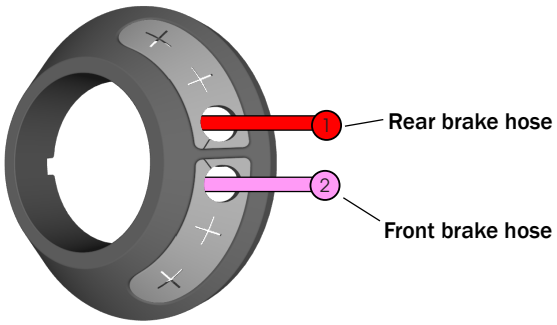

6. Slide the spacers and stem down the steerer tube.

   NOTICE: Make sure at least one spacer is above the stem (unless the stem has an integrated spacer).

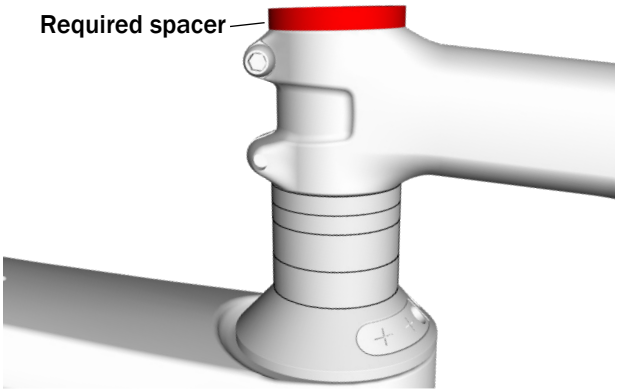

7. Install the top cap and top cap fastener.

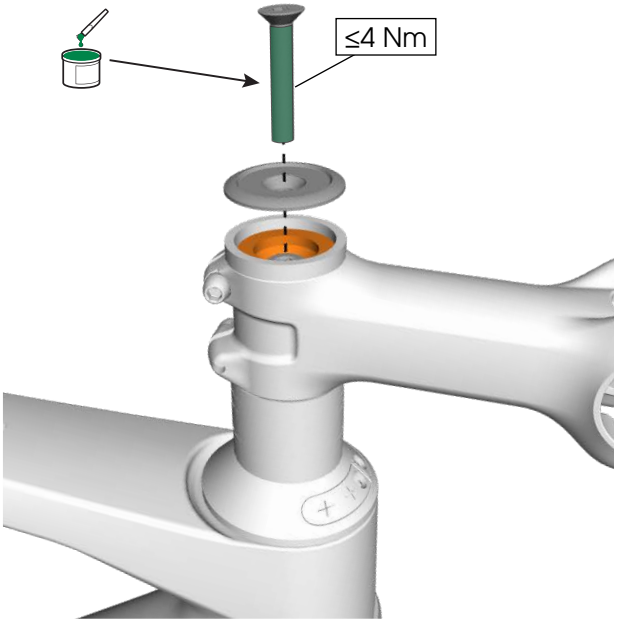

Seatpost

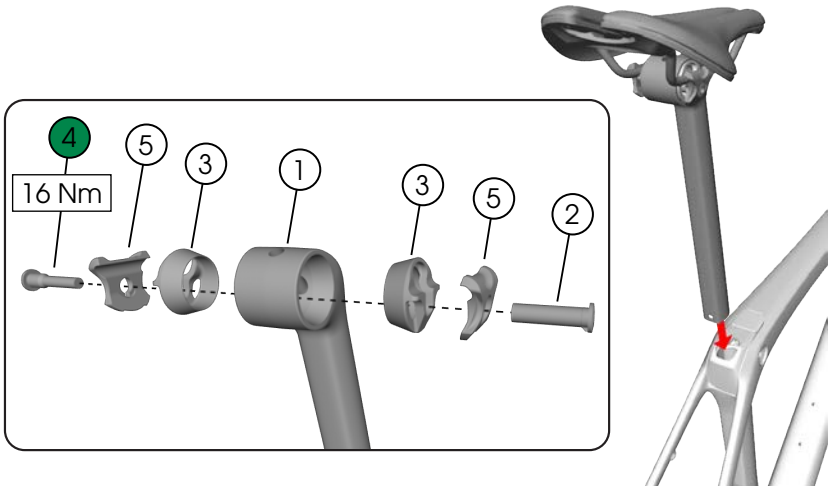

1	Seatpost	280 mm x 5 mm — *W5285077* 280 mm x 20 mm — *W5285075* 320 mm x 5 mm — *W5285078* 320 mm x 20 mm — *W5285076*
2	Bolt insert	*272628*
3	Barrels	
4	Fastener (M6 x 16 mm)	
5	Saddle clamp ears	(7 mm x 7 mm) — *436657* (7 mm x 10 mm) — *436658*

Minimum insertion

The seatpost must be inserted into the seat tube far enough that the minimum insertion line is at or below the top tube (as shown below).

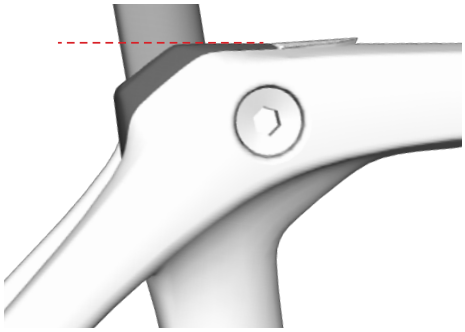

Seatpost height

	Seat mast type	Saddle rails to bottom bracket (lengths in mm)					
		XS	S	M	M/L	L	XL
Minimum insertion	Short	614	655	696	736	778	819
	Long	654	695	736	776	818	859
Maximum insertion	Short	549	590	631	671	713	754
	Long	589	630	671	711	753	794

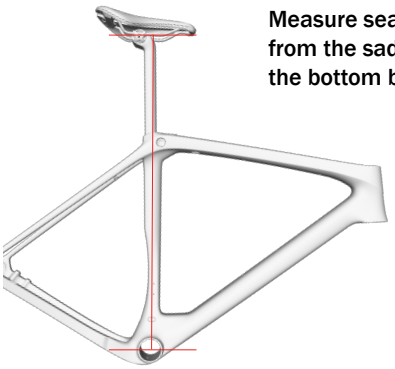

Measure seatpost height from the saddle rails to the bottom bracket shell.

Maximum insertion

NOTICE: Do not lower the seatpost all the way to the stop point — this can inhibit IsoSpeed movement and cause damage to the seatpost. There must be at least a 5 mm gap between the bottom of the seatpost and the stop point.

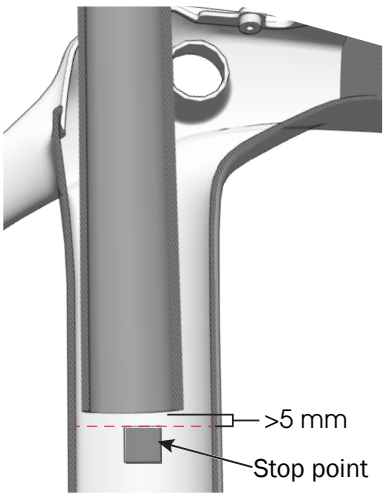

IsoSpeed

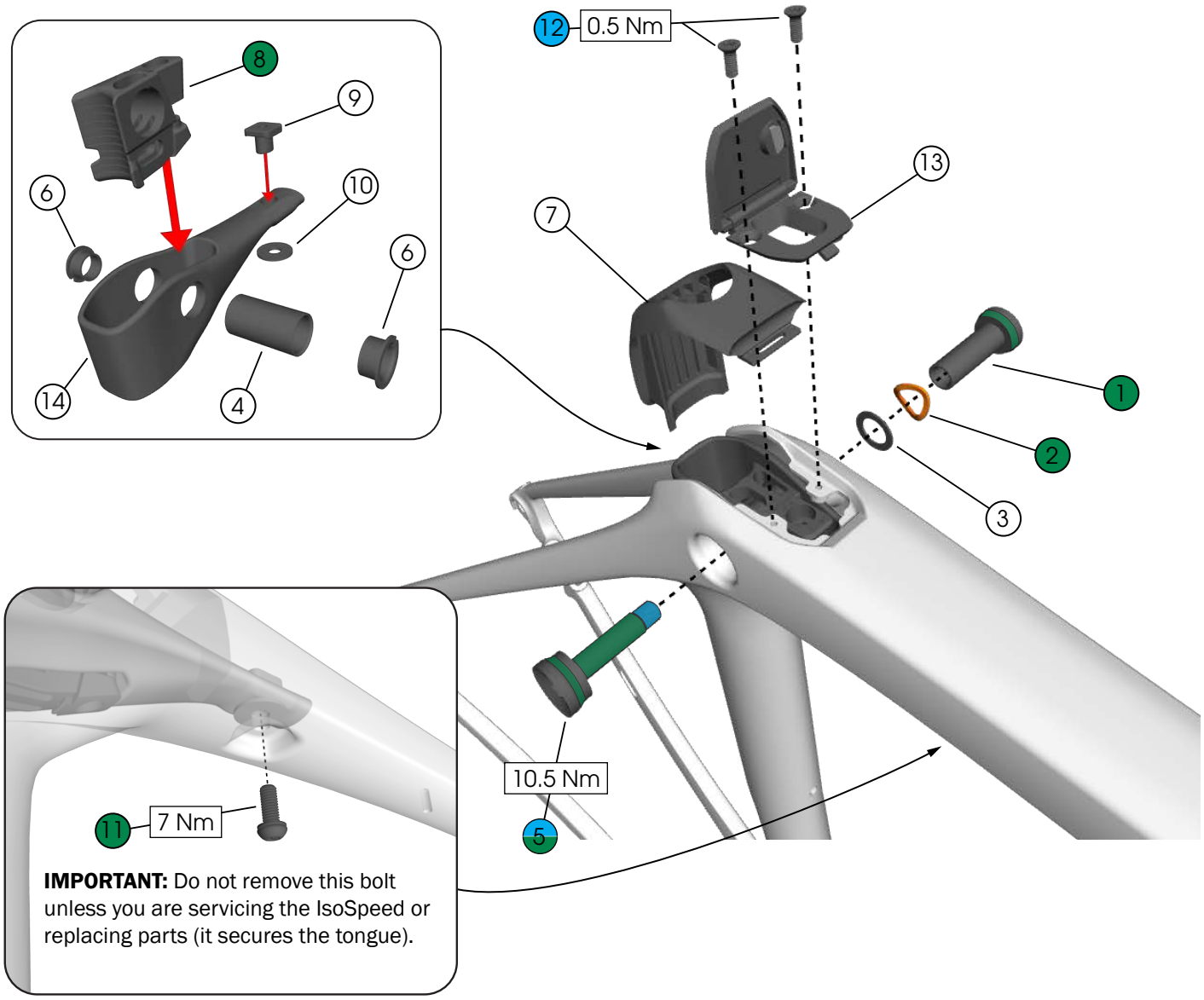

IMPORTANT: Do not remove this bolt unless you are servicing the IsoSpeed or replacing parts (it secures the tongue).

- 1 Pivot axle
- 2 Wave washer
- 3 Washer
- 4 Cylindrical bushing
- 5 Pivot bolt

5328243

- 6 Flanged bushings — *W5256074*
- 7 Cover — *W5316526*
- 8 Wedge — *W5275256*
- 9 T-nut — *W5260276*
- 10 Washer (M6) — *W5314459*
- 11 Fastener, T25 tamper-resistant (M6 x 16 mm) — *W5280089*
- 12 Fasteners (M3 x 8 mm) — *W5269016*
- 13 Lid — *W5316527*
- 14 Tongue
  - XS — *W5318644*
  - S — *W5318643*
  - M/M-L/L/XL — *W5317439*

Service the IsoSpeed

NOTICE: Do not perform routine maintenance on the IsoSpeed. Only service IsoSpeed hardware if you are replacing parts.

NOTE: If you remove the flanged bushings or the wave washer, you must replace them.

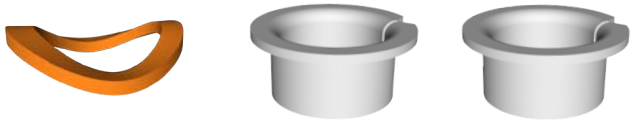

1. Remove the lid and cover.

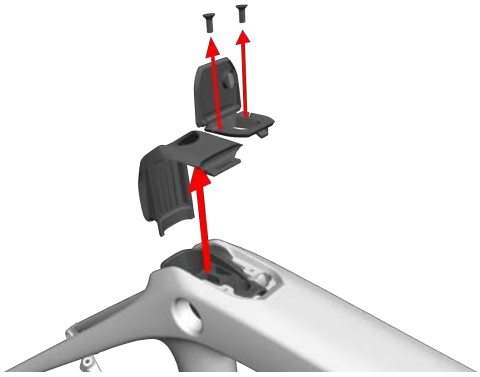

2. Remove the pivot bolt, pivot axle, and washers. Hold the pivot axle in place with an 8 mm wrench while loosening the pivot bolt.

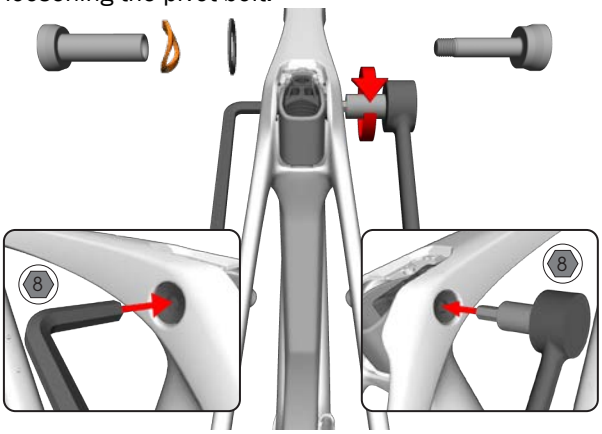

3. Remove the fastener underneath the top tube.

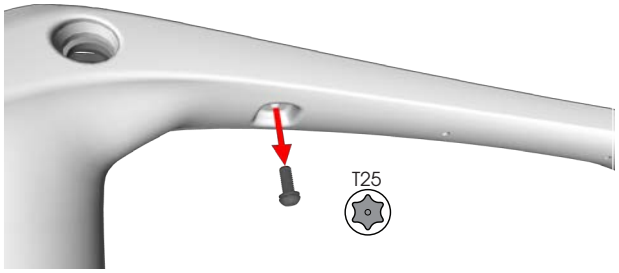

4. Remove the tongue and the flanged bushings. Discard the wave washer and flanged bushings.

   TIP: Use a screwdriver to push the flanged bushings out of the frame.

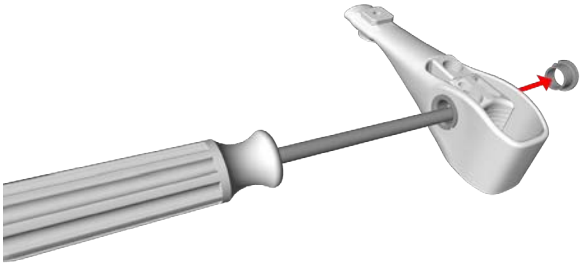

5. Use a rubber mallet and a 12.7 mm (1/2") bushing tool to to remove the cylindrical bushing.

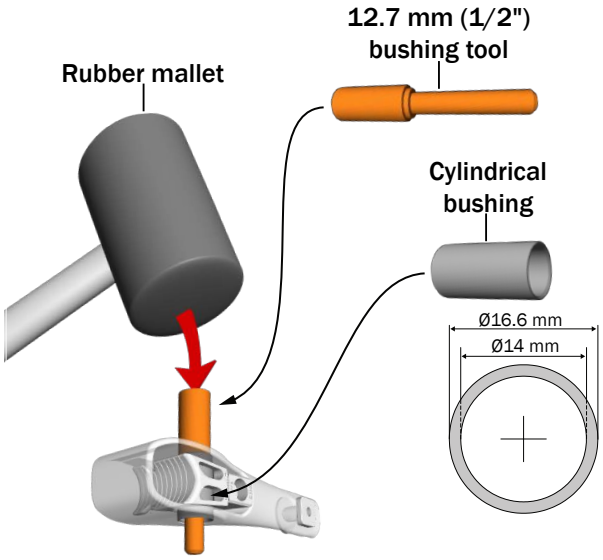

6. Clean all parts and mating surfaces using 50/50 isopropyl/water mix.

Service the IsoSpeed (continued)

7. Grease the wedge.

   NOTICE: Be careful to not get grease on any other surfaces as that could damage components.

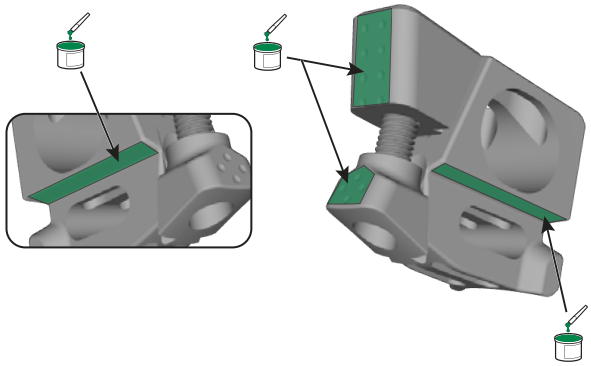

8. Assemble the tongue (you may have to use a bushing tool — see step 5).

   NOTE: Make sure you use new flanged bushings.

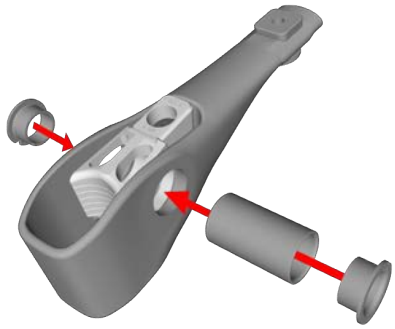

9. Insert the tongue assembly and loosely install the tongue fastener.

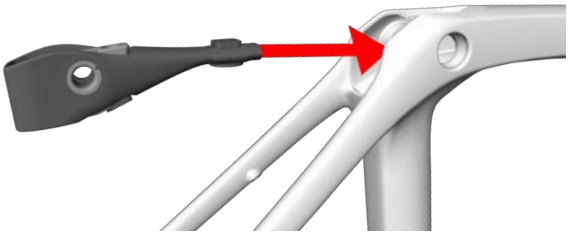

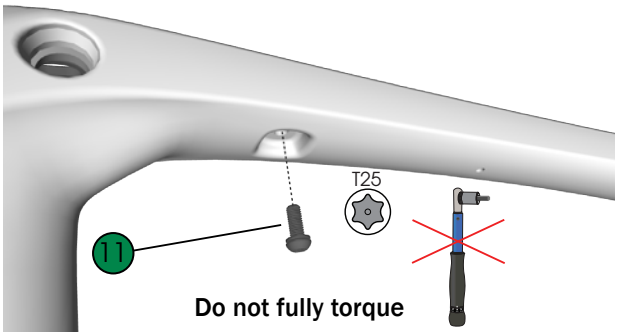

10. Install the cover.

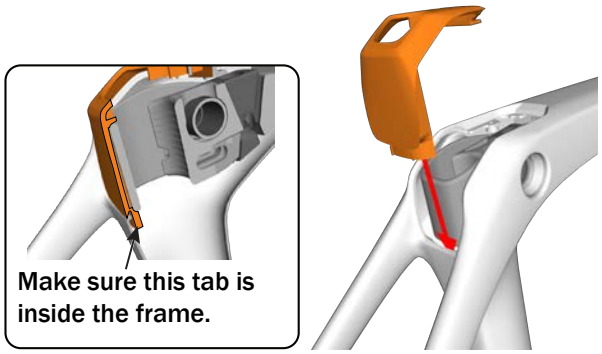

11. Apply high-strength threadlocker to the pivot bolt threads.

    IMPORTANT: Let the threadlocker fully dry following the manufacturer's specifications before installing to prevent threadlocker from contacting the bushings.



Service the IsoSpeed (continued)

12. Grease the wave washer, pivot axle, and pivot bolt in the areas highlighted below.

    IMPORTANT: Do not apply grease to any part of the bushings, frame pockets, or pivot axle.

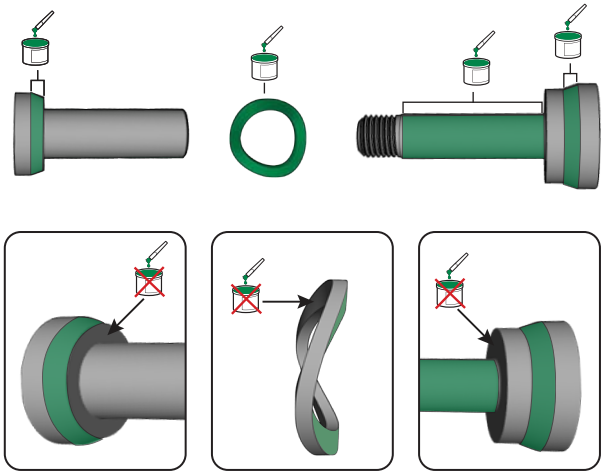

13. Slide the wave washer over the pivot axle.

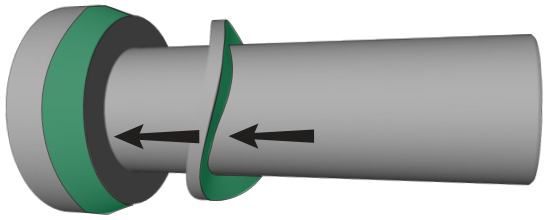

14. Install all hardware and tighten the pivot bolt to 10.5 Nm while holding the pivot axle in place with an 8 mm wrench.

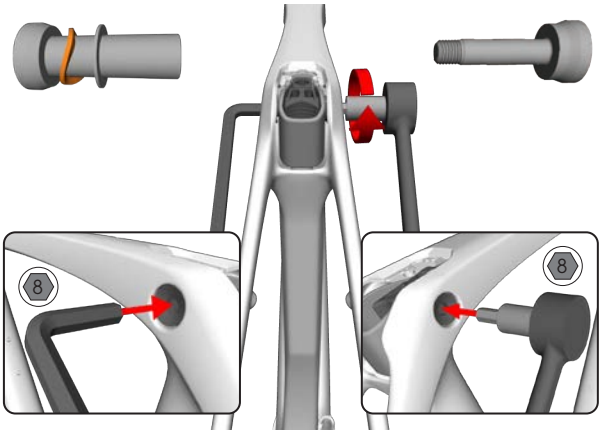

15. Tighten the tongue fastener.

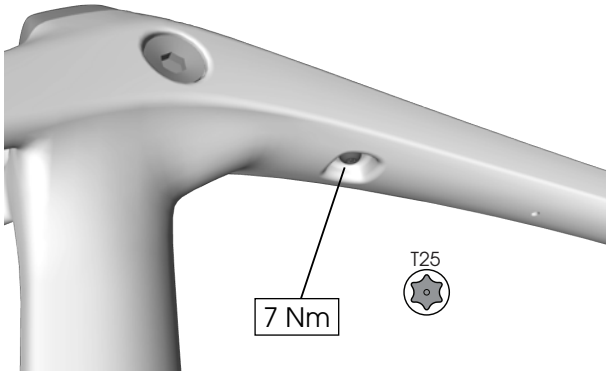

16. Install the cover and lid.

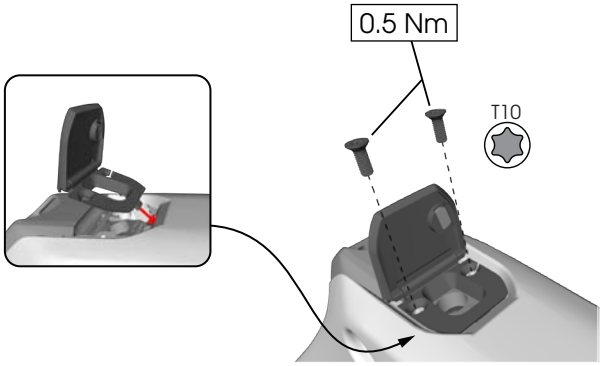

Frame guard

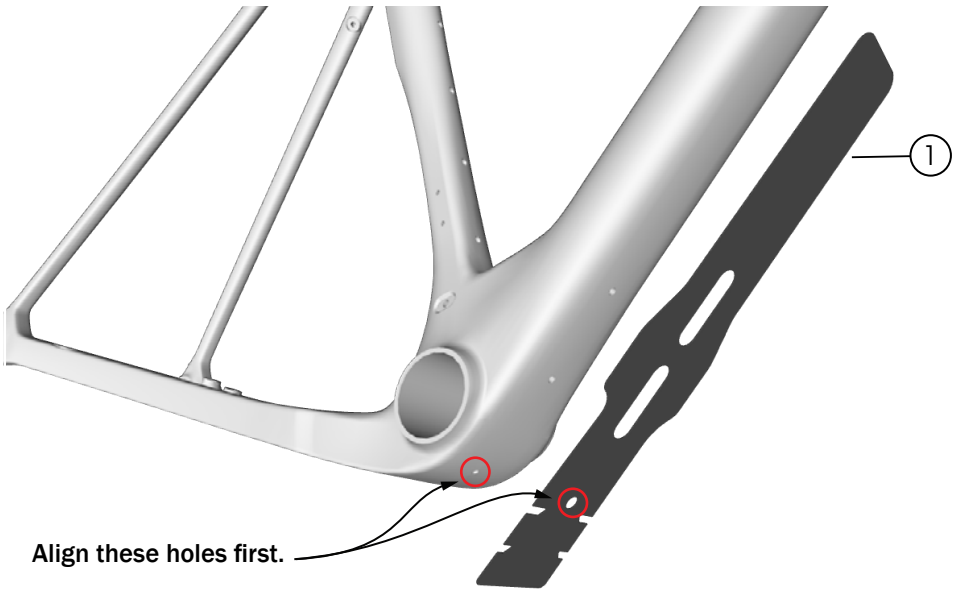

1 Down tube guard — *W5316530*

Install the down tube guard

1. Use isopropyl alcohol to clean the frame surface where the guard attaches. Wait for the alcohol to dry before applying the guards.

   NOTICE: Do not clean the entire frame with isopropyl alcohol. Isopropyl alcohol could damage the paint.

2. Apply the down tube guard. Align the drain hole first and then the threaded mounting holes.

Frame mounts

NOTE: There is an additional mount on M and larger frame sizes (see graphic below).

XS / S

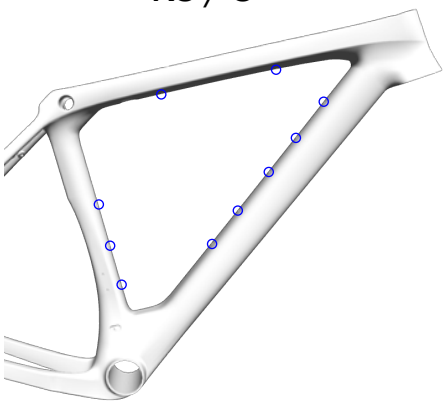

M — XL

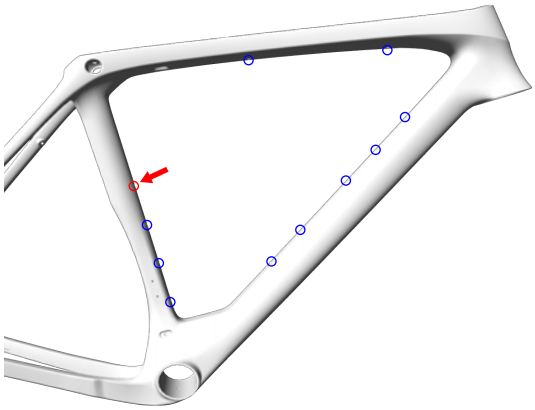

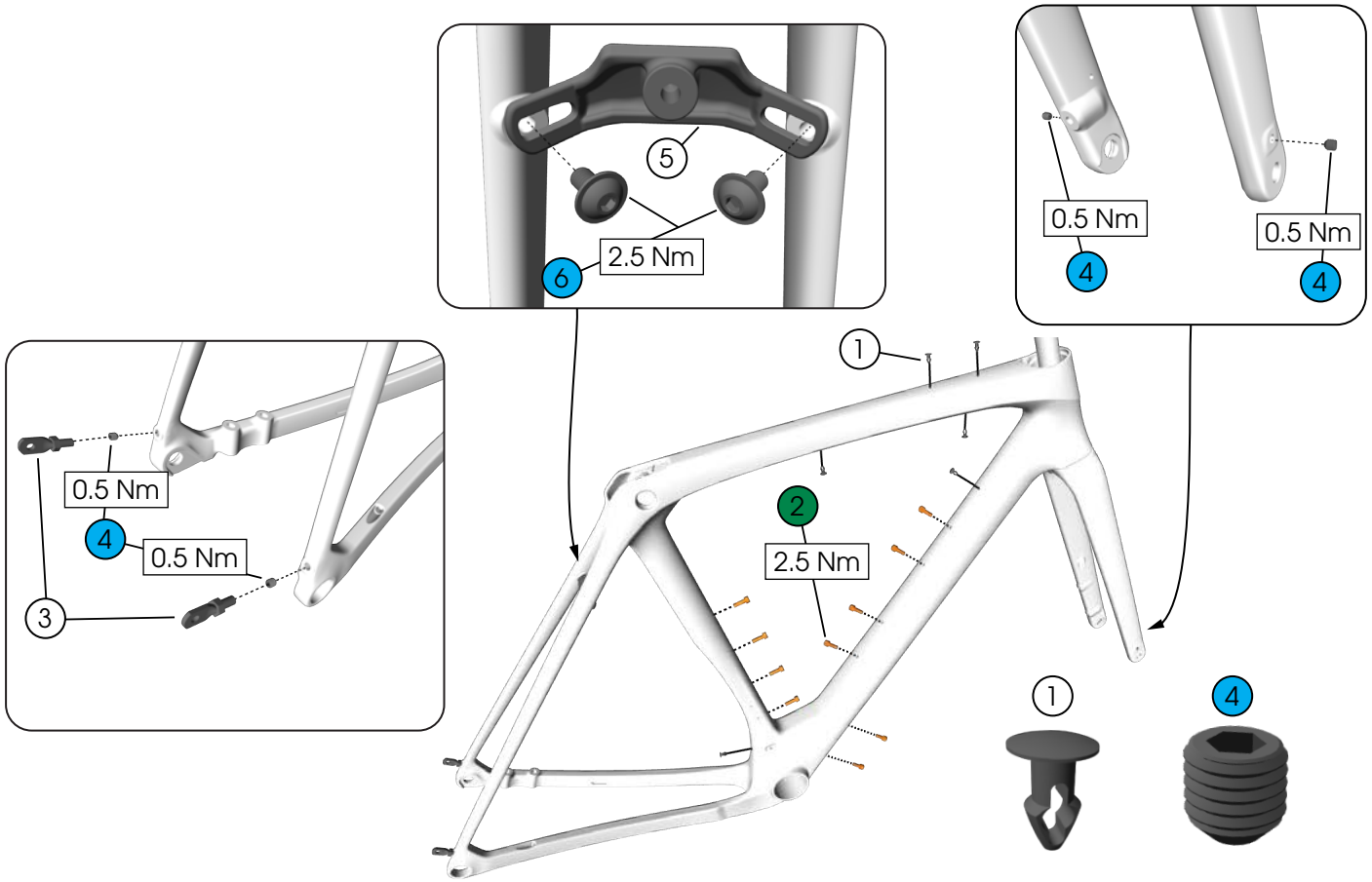

1. Plugs (M5) — *W308963*
2. Fasteners (M5 x 16 mm) — *W596821*
3. Fender mount fasteners — *W317707*
4. Set screws (M5 x 5 mm)
5. Fender mount bridge
   - XS/S — *W595608*
   - M/M-L/L — *W602256*
   - XL — *W5312166*
6. Fasteners (M4 x 8 mm)

Bottle cage adapters

Use the adapter(s) to fit three bottle cages in the frame triangle.

NOTE: Only frame sizes S and larger can fit three bottles in the frame triangle.

**S frame shown below*

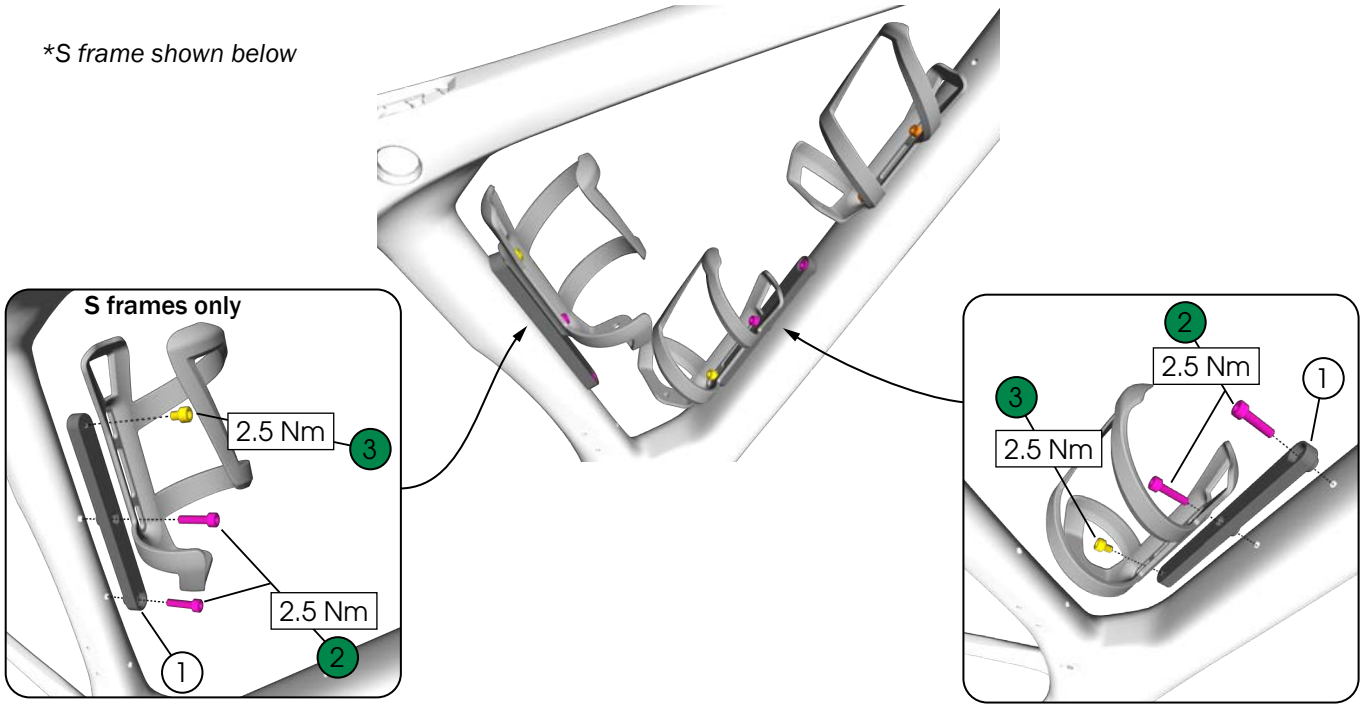

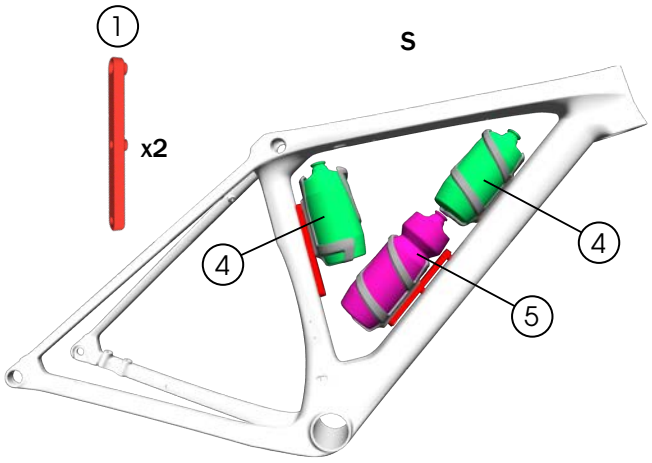

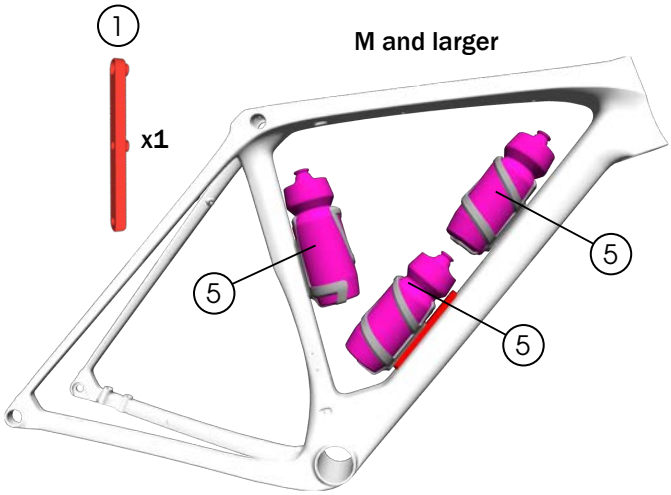

1. Adapters
2. Fasteners (M5 x 20 mm)
3. Fasteners (M5 x 8 mm)

W5271627

4. 21 oz (621 ml) bottle
5. 26 oz (769 ml) bottle





NOTE: Side-load bottle cages are required for these configurations.

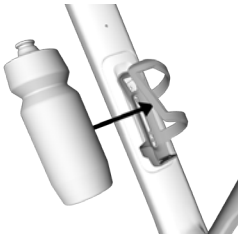

Triangle bag

NOTE: Triangle bags are sold aftermarket.

The charts below show the largest bottles you can fit with the bag installed.

XS

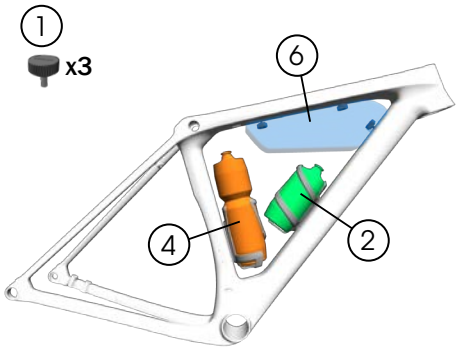

S

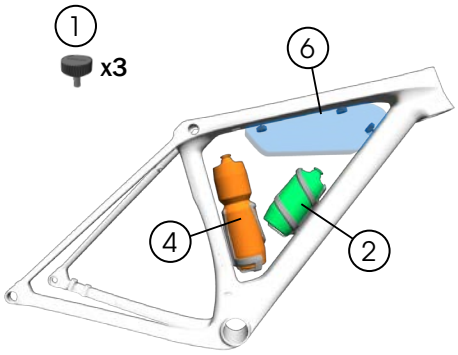

M

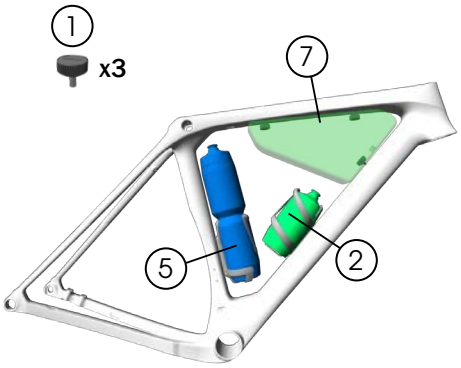

M-L

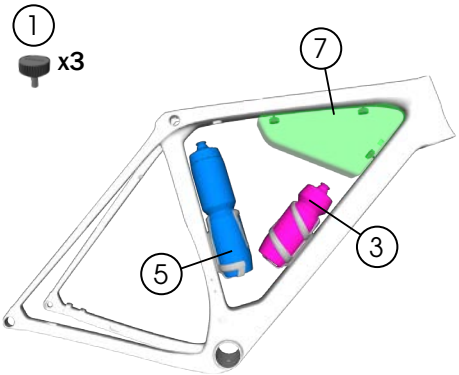

L

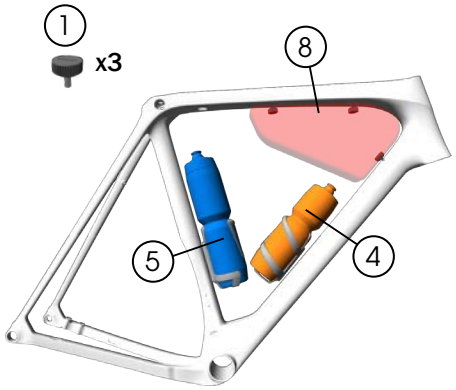

XL

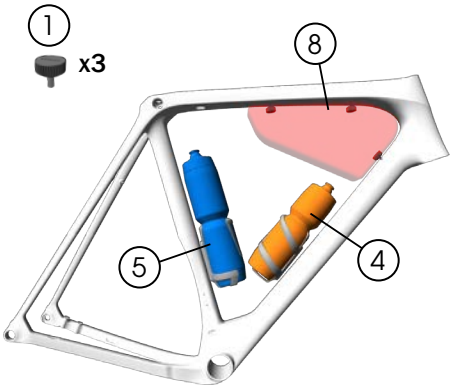

1. Thumb screws — *5324792*
2. 15 oz (444 ml) bottle 
3. 21 oz (621 ml) bottle 
4. 26 oz (769 ml) bottle 
5. 34 oz (1,006 ml) bottle 
6. Triangle bag, XS/S (1 L) — *5323152* 
7. Triangle bag, M/M-L (1.3 L) — *5323153* 
8. Triangle bag, L/XL (1.6 L) — *5323154* 

Adventure bag

NOTE: Adventure bags are sold aftermarket.

The charts below show the largest bottles you can fit with the bag installed.

XS

Not compatible

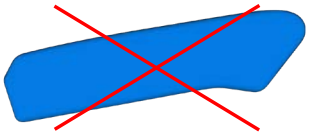

S

Not compatible

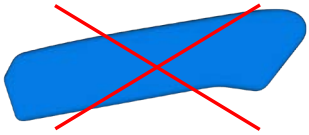

M

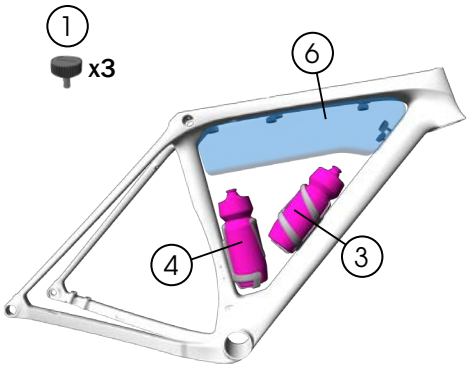

M-L

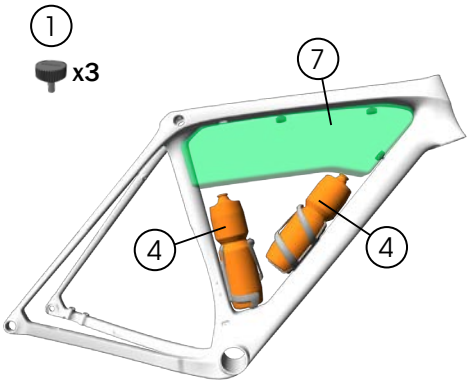

L

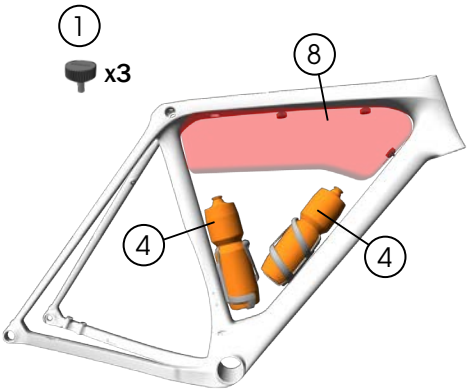

XL

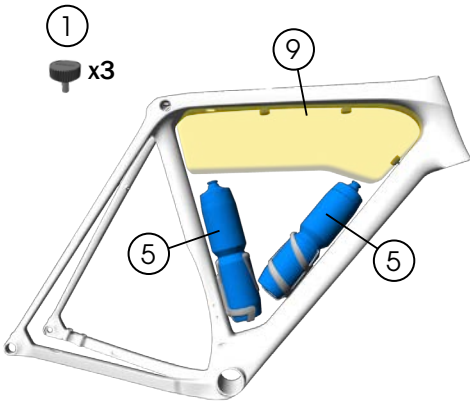

1. Thumb screws — *5324792*
2. 15 oz (444 ml) bottle
3. 21 oz (621 ml) bottle
4. 26 oz (769 ml) bottle
5. 34 oz (1,006 ml) bottle
6. Adventure bag, M (2 L) — *5323148*
7. Adventure bag, M-L (2.6 L) — *5323149*
8. Adventure bag, L (2.8 L) — *5323150*
9. Adventure bag, XL (3 L) — *5323151*

Universal derailleur hanger (UDH) and axles

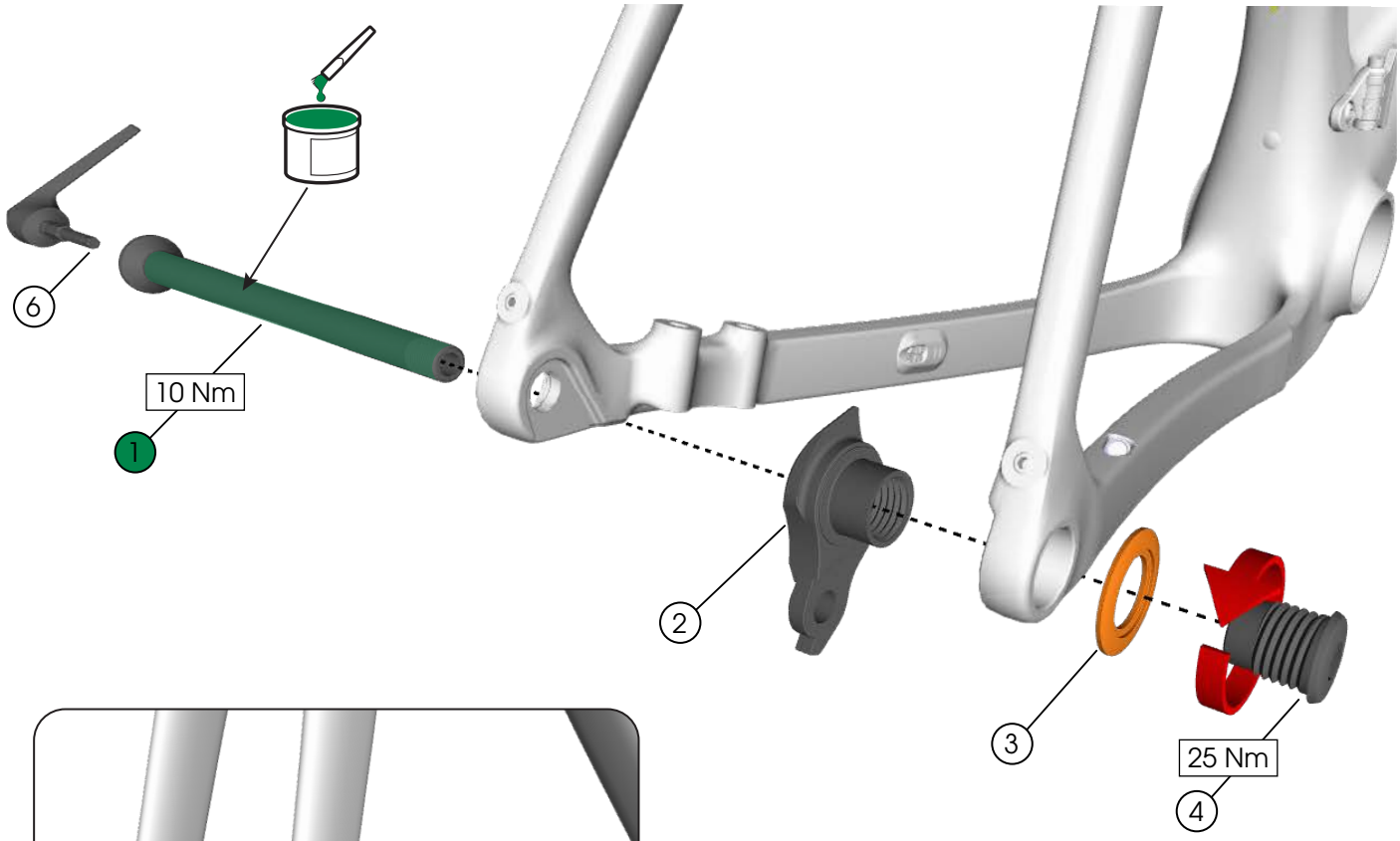

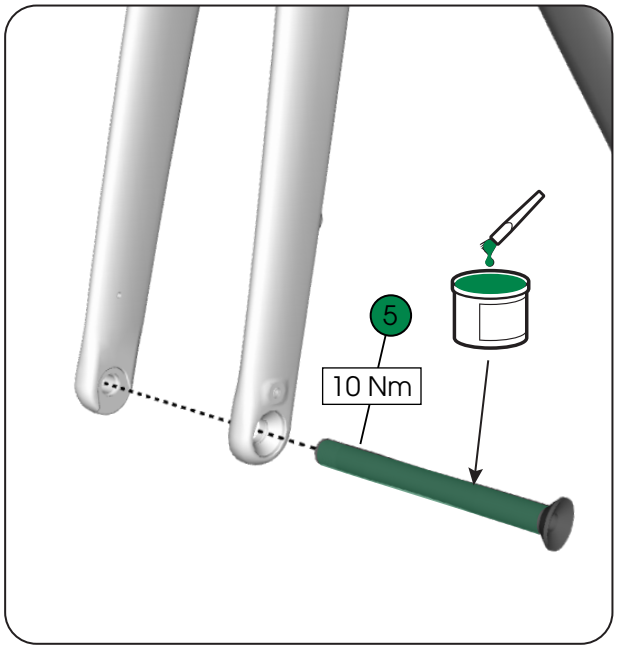

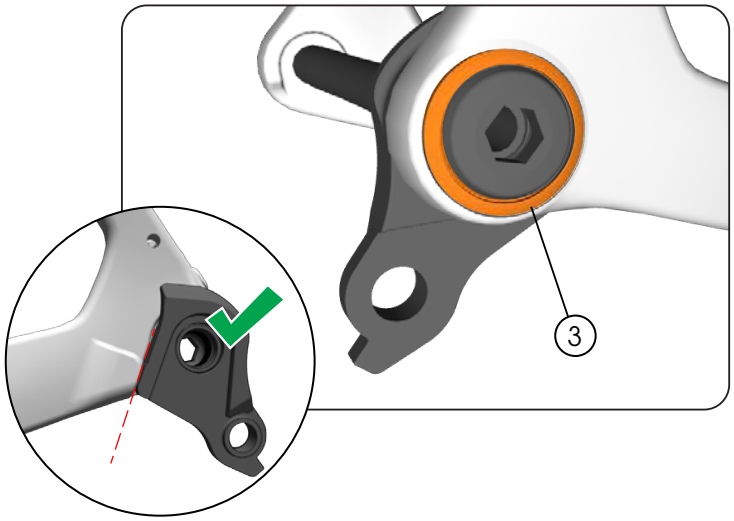

1. Rear axle (M12 x 166 mm) — **W5312169*
2. Derailleur hanger
3. Washer (25 mm)
4. Fastener (M12 x 16 mm)

W5271424

5. Front axle (M12 x 119.5 mm) — **W5312168*
6. Switch lever (black) — **W5312899*

**color-matched part — see Trekbikes.com for full list*

Chainkeeper

NOTE: This chainkeeper is compatbile with inner chainrings 44T and smaller.

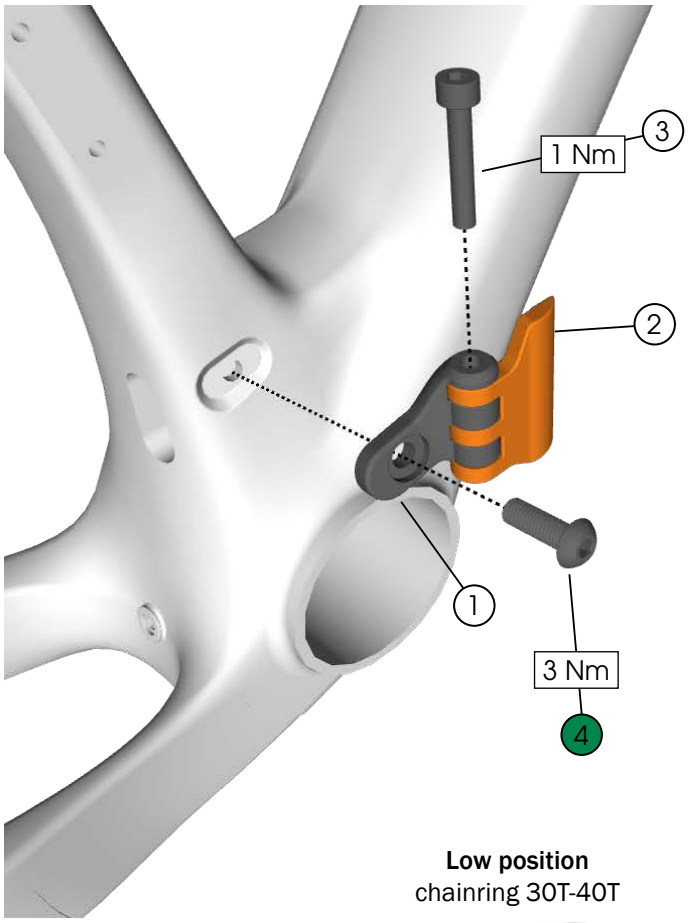

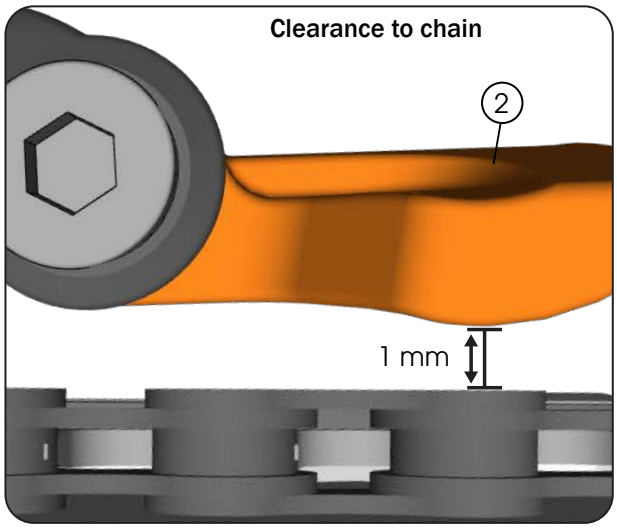

Low position
chainring 30T-40T



High position
chainring 34T-44T

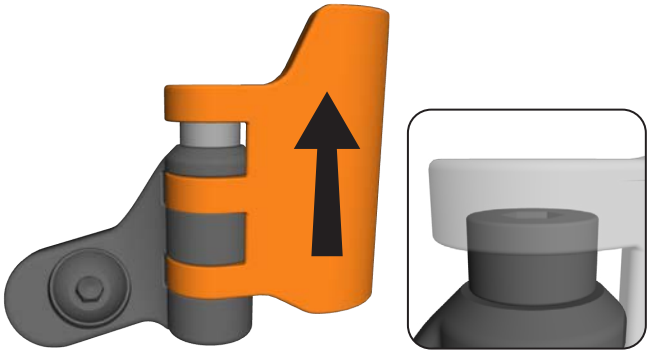

1. Base
2. Tab
3. Fastener (M4 x 22 mm)

— *5320962*

4. Fastener (M5 x 16 mm) — *5328801*

Front derailleur hanger

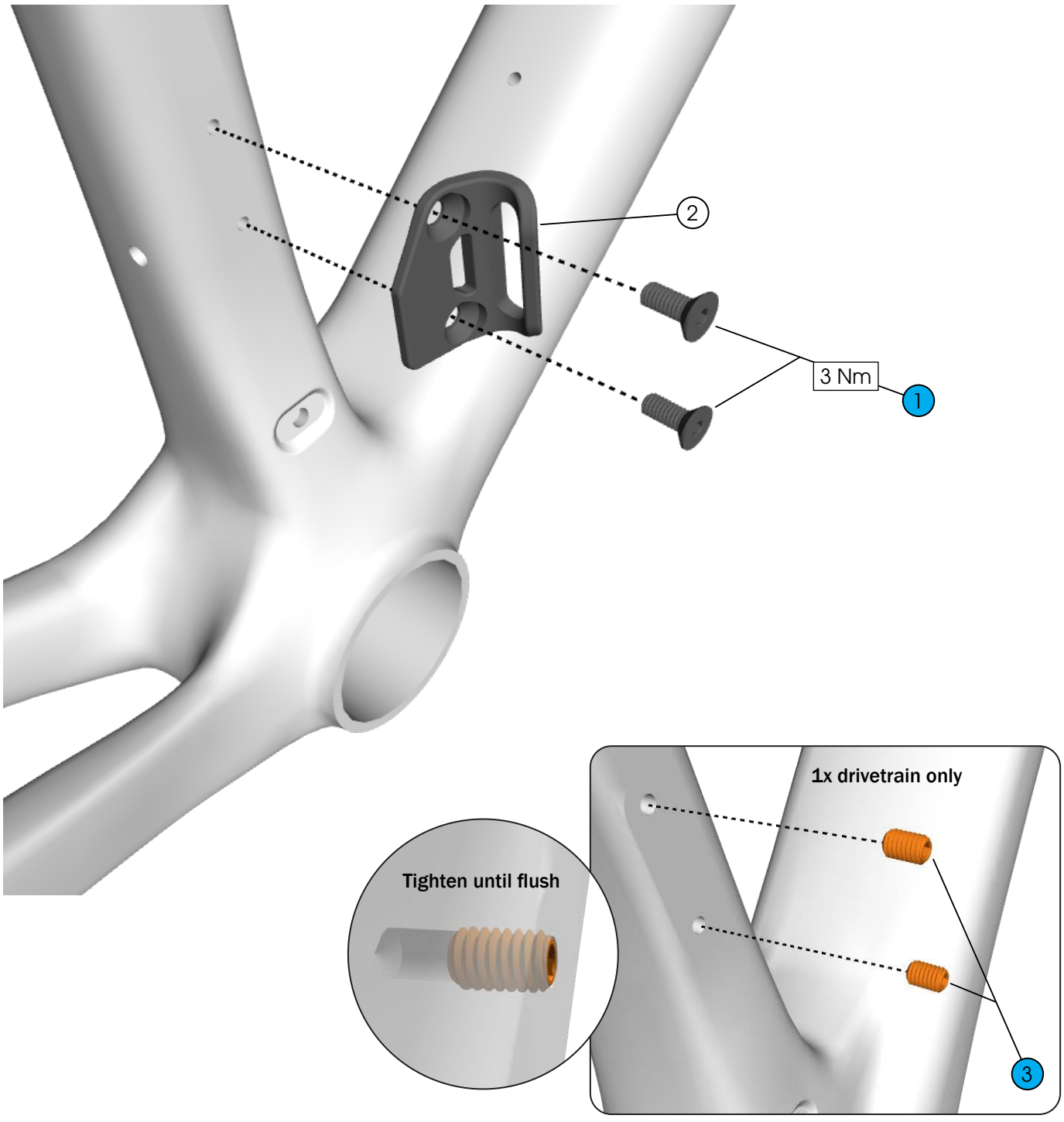

1. Fasteners (M4 x 10 mm)
2. Front derailleur hanger

5320961

3. Set screws (M4 x 8 mm) — *5320962*

Front brake mount adapter

WARNING

Risk of injury or death due to incorrect brake mounting

Correctly orient the brake mount adapter so that the brake pads align fully with rotor. Improper installation of brake mount adapter can result in brake failure, loss of control, and injury or death.

Front	160 mm rotor	180 mm rotor

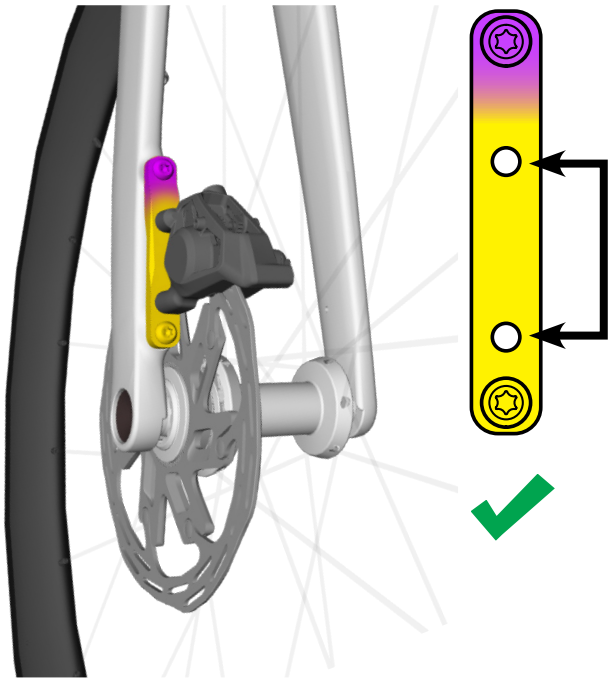

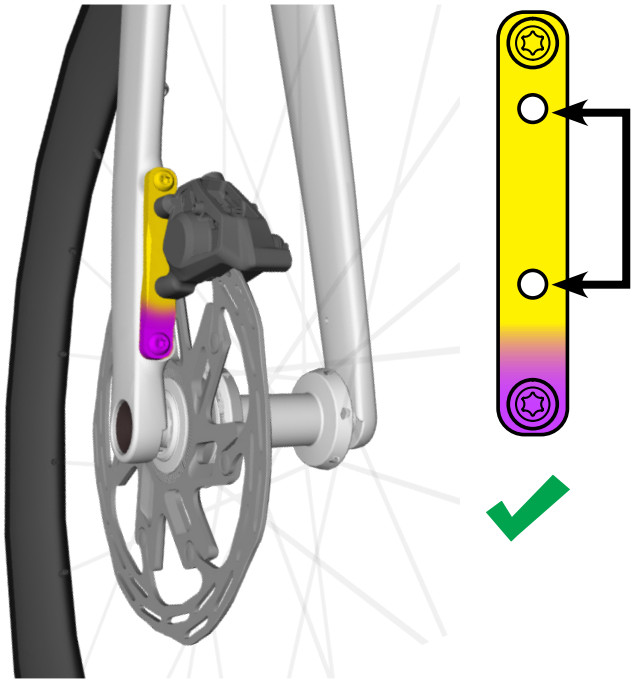

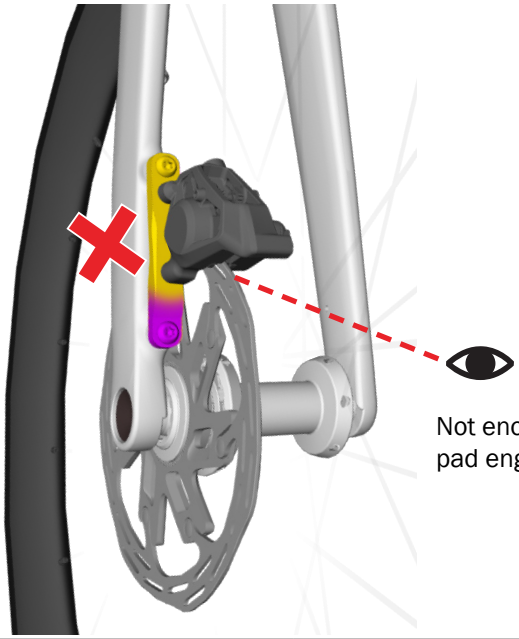

Not enough brake pad engagement

Specifications

Frame

		Checkmate
Hub OLD	Front	100 mm
	Rear	142 mm
Fork steerer tube OD	Upper	28.6 mm
	Lower	38.8 mm
Bottom bracket type/width		T47/85.5 mm
Brake rotor diameter min/max	Front	160/180 mm
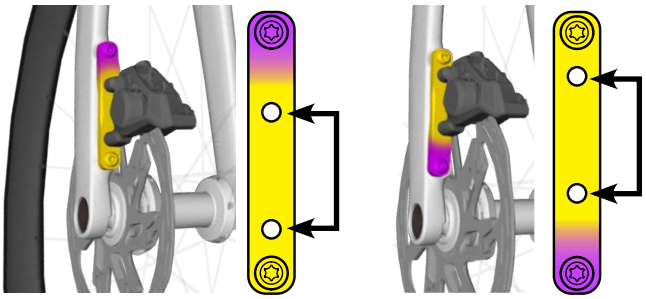 **160 mm** **180 mm**		
Brake rotor diameter min/max	Rear	160/180 mm
Chainstay brake mount thickness		25 mm
Tire width max 700c	Without fender	*45 mm (1x) / *38 mm (2x)
	With fender	*38 mm
Fender compatible	Rear	Yes
	Front	Yes
Dropper post compatible		No

**as measured when the tire is seated on the rim*

Brake hose lengths

NOTE: The lengths below are based on a 44 cm x 100 mm handlebar with 40 mm of headset spacers.

Frame size	Rear brake	Front brake
ALL	1,500–1,700 mm	800–1,000 mm

Chainline/chainring

		Chainline (mm)		Max chainring teeth (T)		
		1x	2x	Small	Large	Single (1x)
Shimano	GRX	49.7	47	–	–	42T
				31T	48T	–
	Road (12 speed)	44.5	44.5	–	–	50T
				34T	50T	–
SRAM	Road	45	45	–	–	48T
				34T	50T	–
	WIDE	47.5	47.5	–	–	50T
				37T	50T	–