TREK



BOSCH

2027 CHARTER+

SERVICE MANUAL

Contents

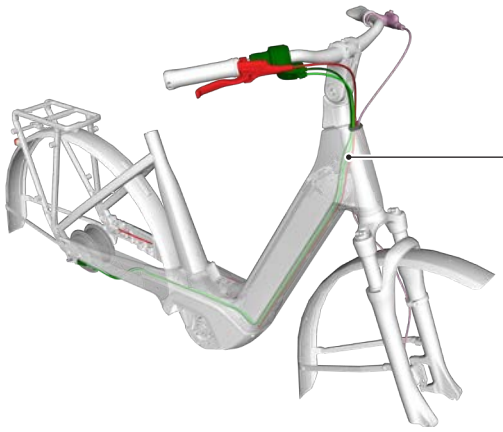

Routing
Brake/shift — mechanical (rest of world)

Brake/shift — mechanical (North America)

Brake/shift — Enviolo

Brake/shift — Nexus

Brake/shift — Enviolo Auto

Brake/shift — Nexus Di2

Headset cabling (rest of world)

Headset cabling (North America)

Frame
Front fender

Rear fender

Rear rack

Frame parts

Specifications

Battery
Battery dock and cable tray

Battery

Battery cover

Headset
Headset

Stem

Adjust the stem angle



E-system
E-system

Lights

Remote

Charge socket

Dropouts
Axle and dropouts — rear derailleur

Rear dropouts — Nexus

Rear dropouts — Enviolo

Adjust the belt tension

Drive unit
Drive unit

Drive unit covers and chainguard

Install the drive unit and covers

Copyright 2026 Trek Bicycle Corporation All Rights Reserved

About this manual

Scope

This manual contains parts diagrams, specifications (such as grease and torque values), instructions, part numbers, and helpful tips. It does not contain instructions for all components (such as brake calipers). Refer to the original manufacturer for more information.

Additional info

The Owner's Manual is available at Trekbikes.com/manuals.

Inspect the bike

Please inspect the bicycle carefully after removal from the box and all packaging:

- Inspect all surfaces of the bicycle for damage, pay special attention to the fork legs and the seat stays (both inside and outside surfaces).
- If packaging damage is located near the front of the bicycle, remove the fork from the frame and inspect the steerer tube for damage.

Replacement parts

Trek recommends using only Trek OEM (original manufacturer) replacement parts.

3D interactive graphics

Click the icon in this manual to view interactive models.

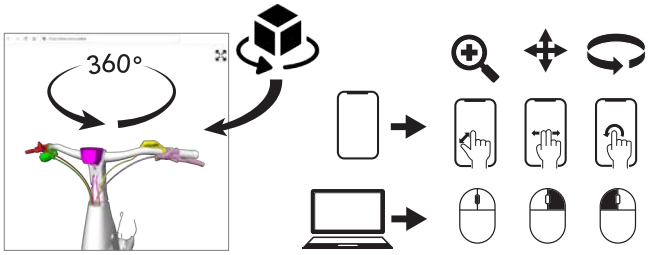

Legend


Cable (zip) tie

Nm Torque value

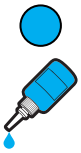
Apply appropriate threadlocker


Apply Bontrager grease


Apply assembly paste

Safety

WARNING

Properly tighten hardware

Always tighten hardware to the specified torque. Over-tightening hardware could deform or break the hardware or components. Under-tightening or over-tightening hardware could cause hardware or components to become loose. Either situation could damage the bicycle and result in injury to the rider.

WARNING

Reapply threadlocker

All reused-fasteners with pre-applied threadlocker must be cleaned with isopropyl alcohol and have new threadlocker applied before re-assembly. If threadlocker is not applied, the fasteners may loosen which could damage the bicycle and result in injury to the rider.

E-system

NOTE: The e-system cables are routed differently on some early production models — see image at bottom of page for details. If servicing, reroute following the top images.

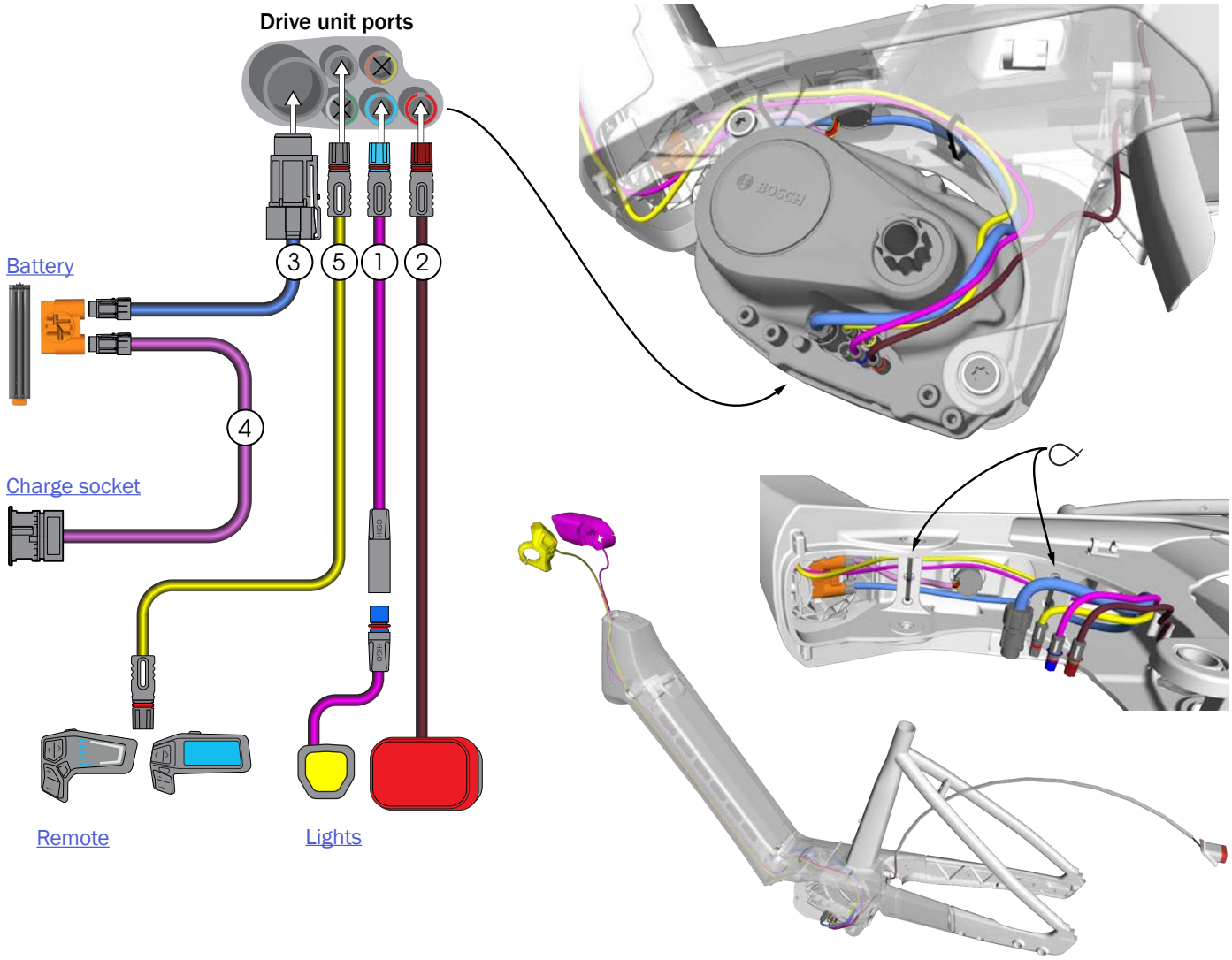

1. Front light cable — *W5331590*
2. Rear light/cable
   - North America — *W5330939*
   - Rest of world — *W5330938*
3. Battery cable — **EB12.100.015*
4. Charge socket/cable — **EB12.120.049*
5. HMI cable (1,500 mm) — **EB12.120.005*

**Bosch part number*

Early production routing

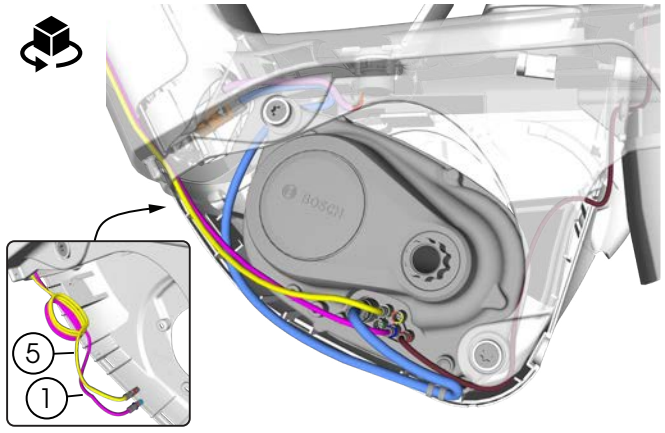

Brake/shift — mechanical (rest of world)

NOTE: This configuration is for bikes sold outside of North American — see Brake/shift — mechanical (North America).

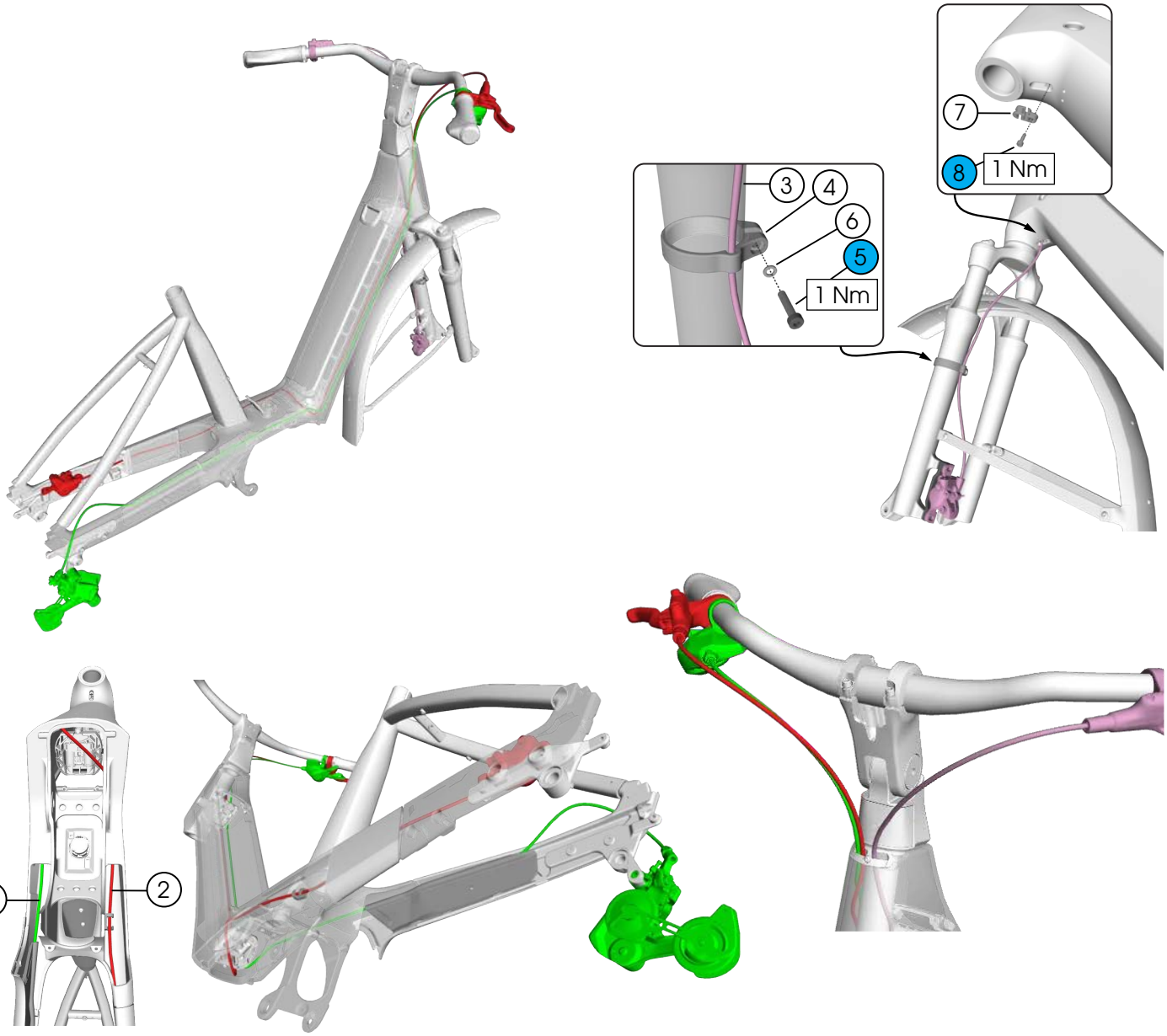

1. Shift cable
2. Rear brake hose
3. Front brake hose
4. Cable guide — *W5332729*
5. Fastener (M4 x 20 mm)



6. Washer (M4)
7. Grommet — *W5331956*
8. Fastener (M3 x 10 mm)



Brake/shift — mechanical (North America)

NOTE: This configuration is for bikes sold outside of North America — see Brake/shift — mechanical (rest of world).

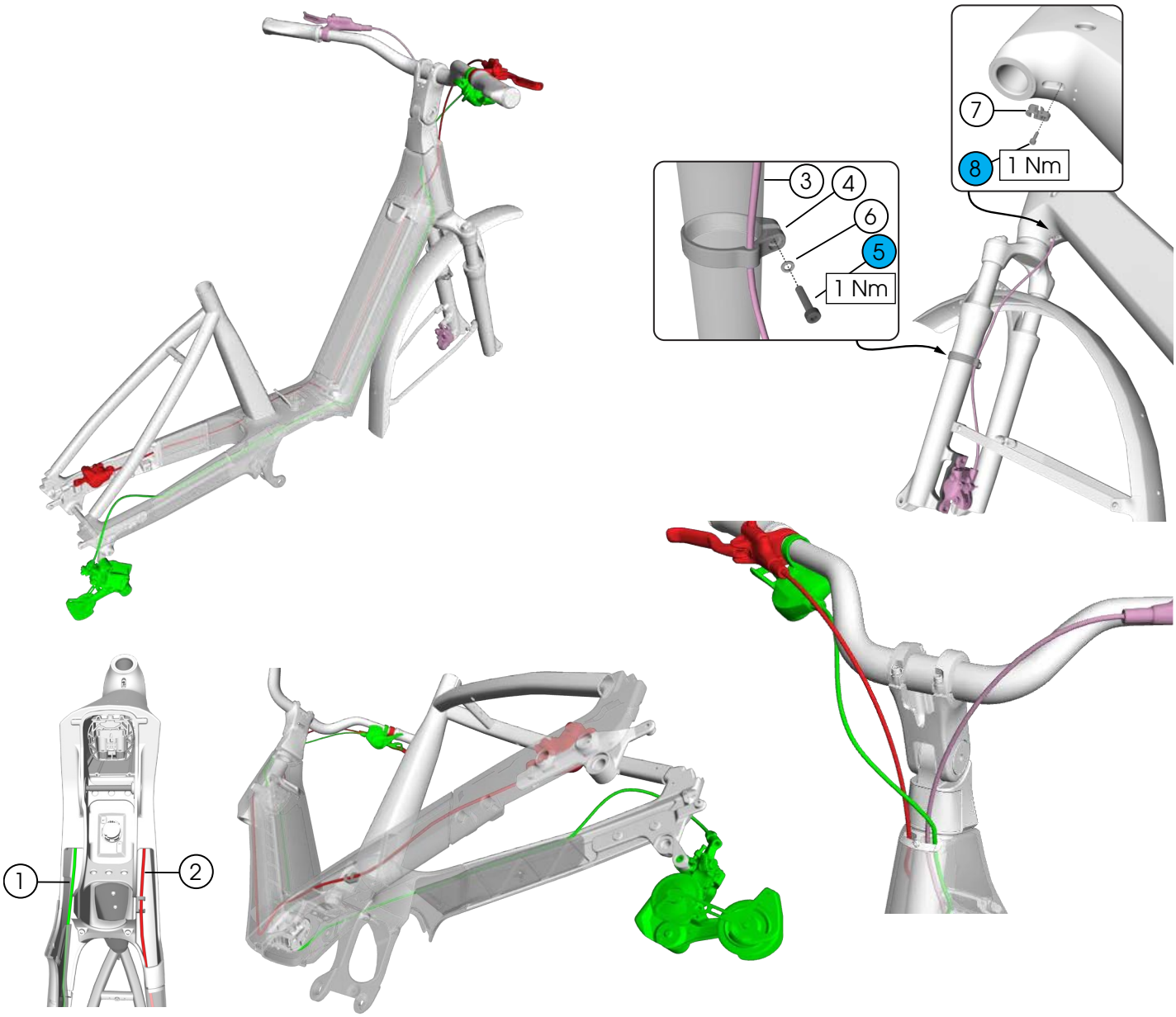

1. Shift cable
2. Rear brake hose
3. Front brake hose
4. Cable guide — *W5332729*
5. Fastener (M4 x 20 mm)



6. Washer (M4)
7. Grommet — *W5331956*
8. Fastener (M3 x 10 mm)



Brake/shift — Enviolo



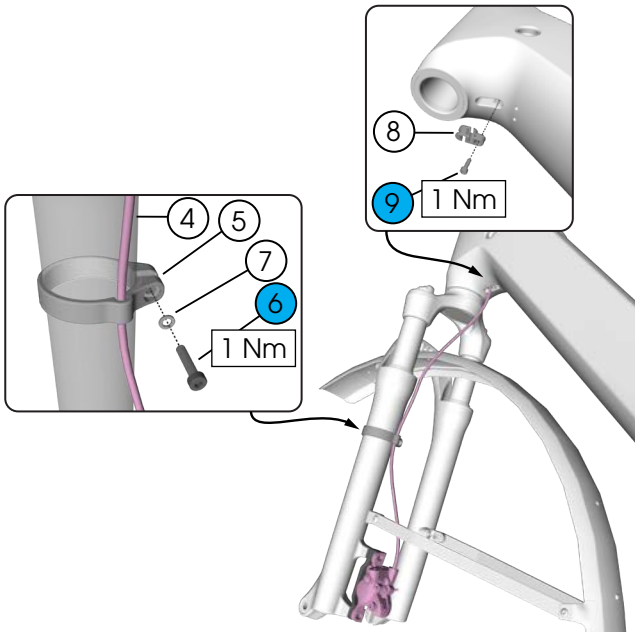

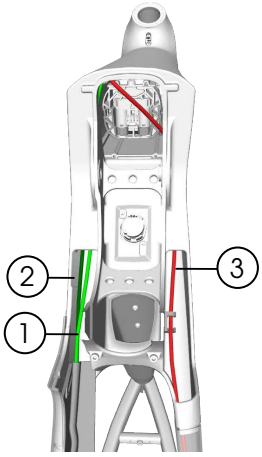

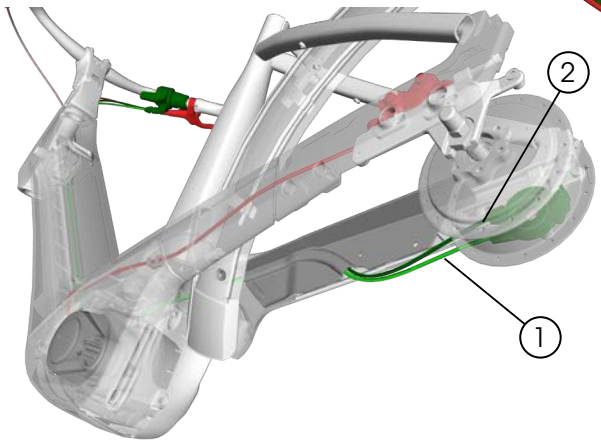

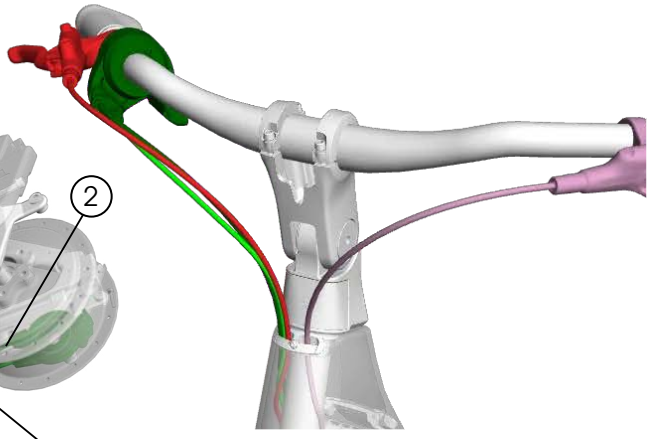

1. Shift cable, overdrive
2. Shift cable, underdrive
3. Rear brake hose
4. Front brake hose
5. Cable guide — *W5332729*
6. Fastener (M4 x 20 mm)



7. Washer (M4)
8. Grommet — *W5331956*
9. Fastener (M3 x 10 mm)



Brake/shift — Nexus



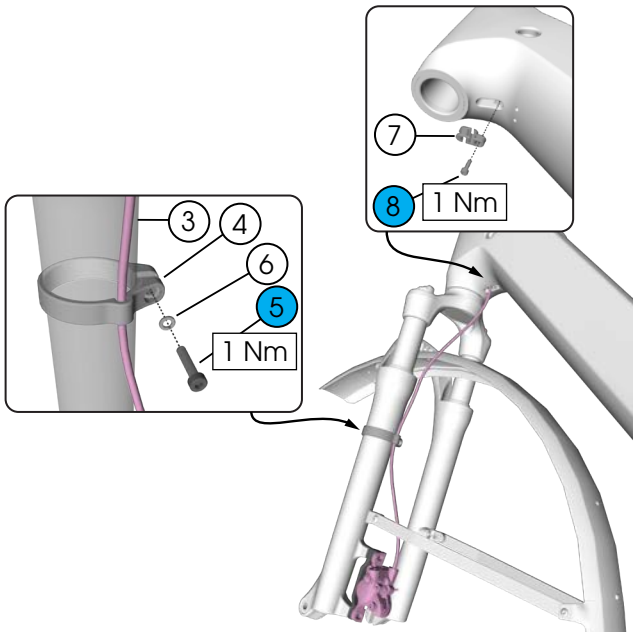

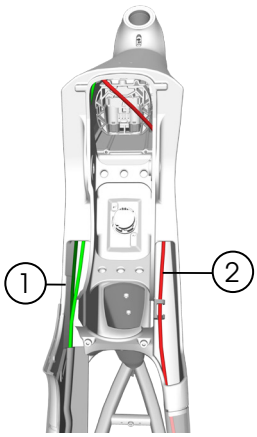

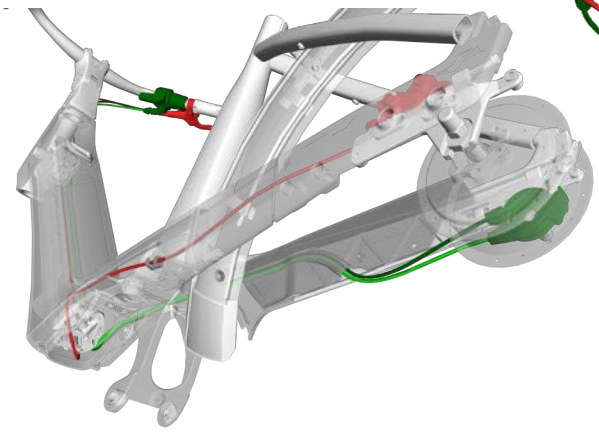

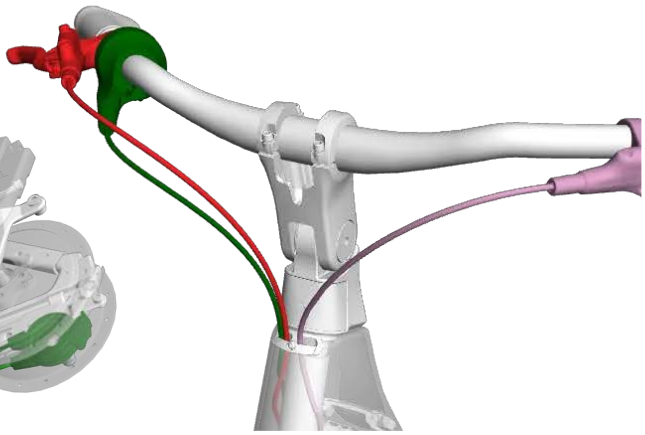

1. Shift cable
2. Rear brake hose
3. Front brake hose
4. Cable guide — *W5332729*
5. Fastener (M4 x 20 mm)



6. Washer (M4)
7. Grommet — *W5331956*
8. Fastener (M3 x 10 mm)



Brake/shift — Enviolo Auto



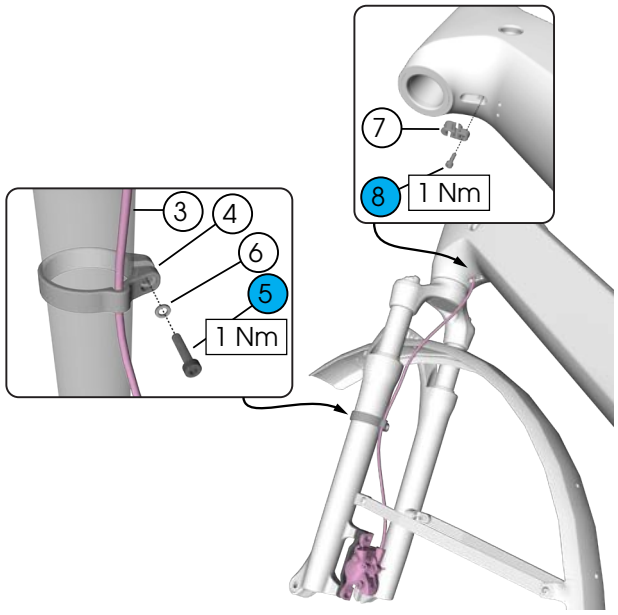

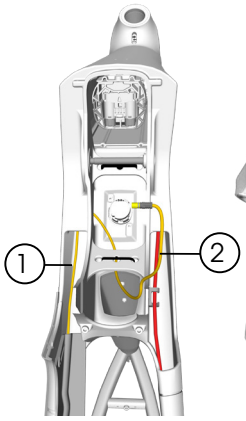

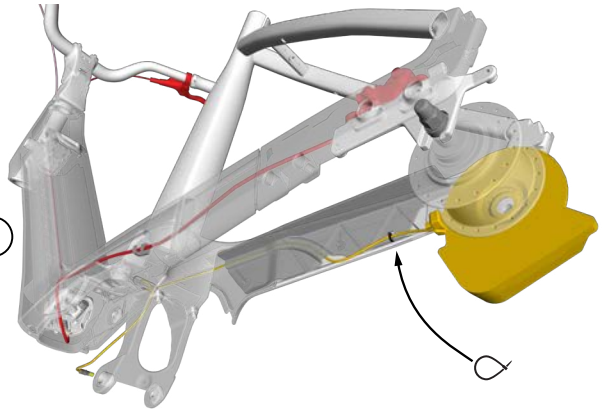

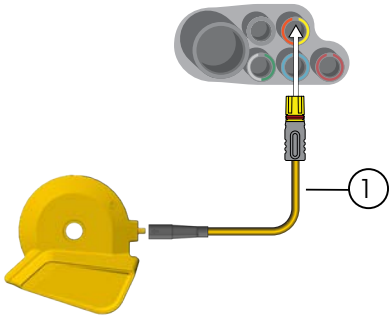

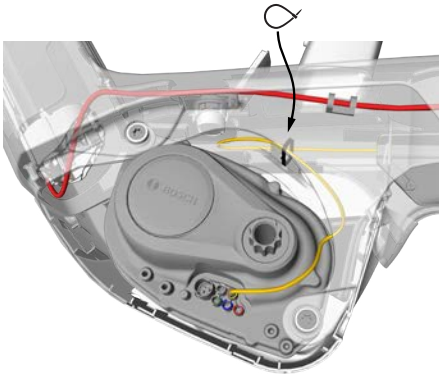

1. Shift cable — *WIRE-AT3-800-OE-12V (Enviolo)*
2. Rear brake hose
3. Front brake hose
4. Cable guide — *W5332729*
5. Fastener (M4 x 20 mm)



6. Washer (M4)
7. Grommet — *W5331956*
8. Fastener (M3 x 10 mm)

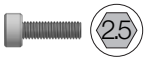

Brake/shift — Nexus Di2



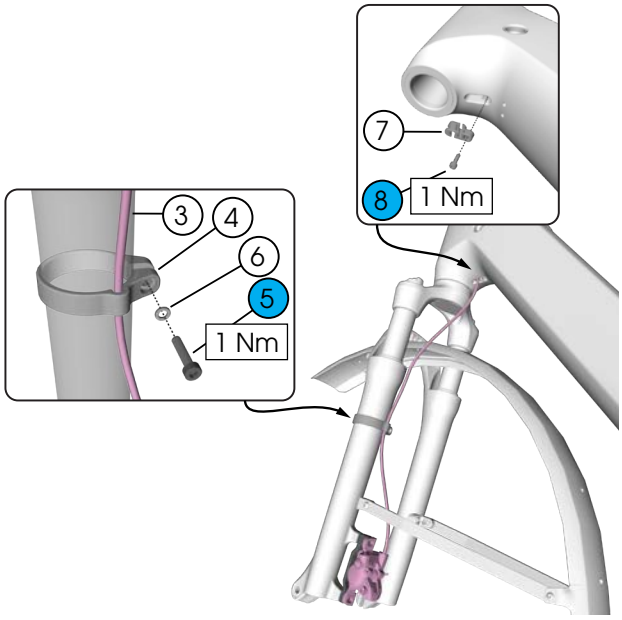

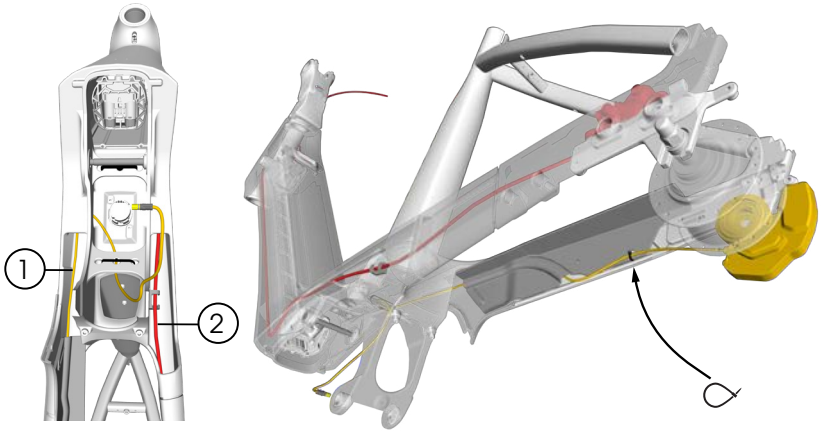

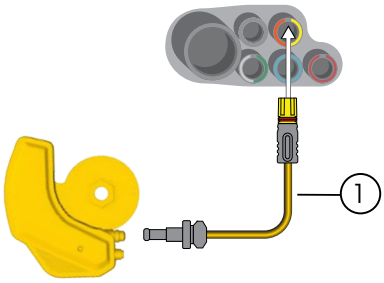

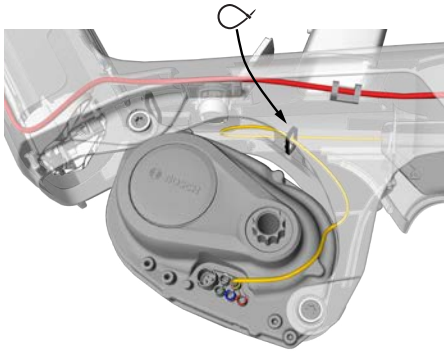

1. Shift cable (1,000 mm) — **EW-PS300*
2. Rear brake hose
3. Front brake hose
4. Cable guide — *W5332729*
5. Fastener (M4 x 20 mm) 

6. Washer (M4)
7. Grommet — *W5331956*
8. Fastener (M3 x 10 mm) 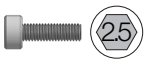

**Shimano part number*

Lights

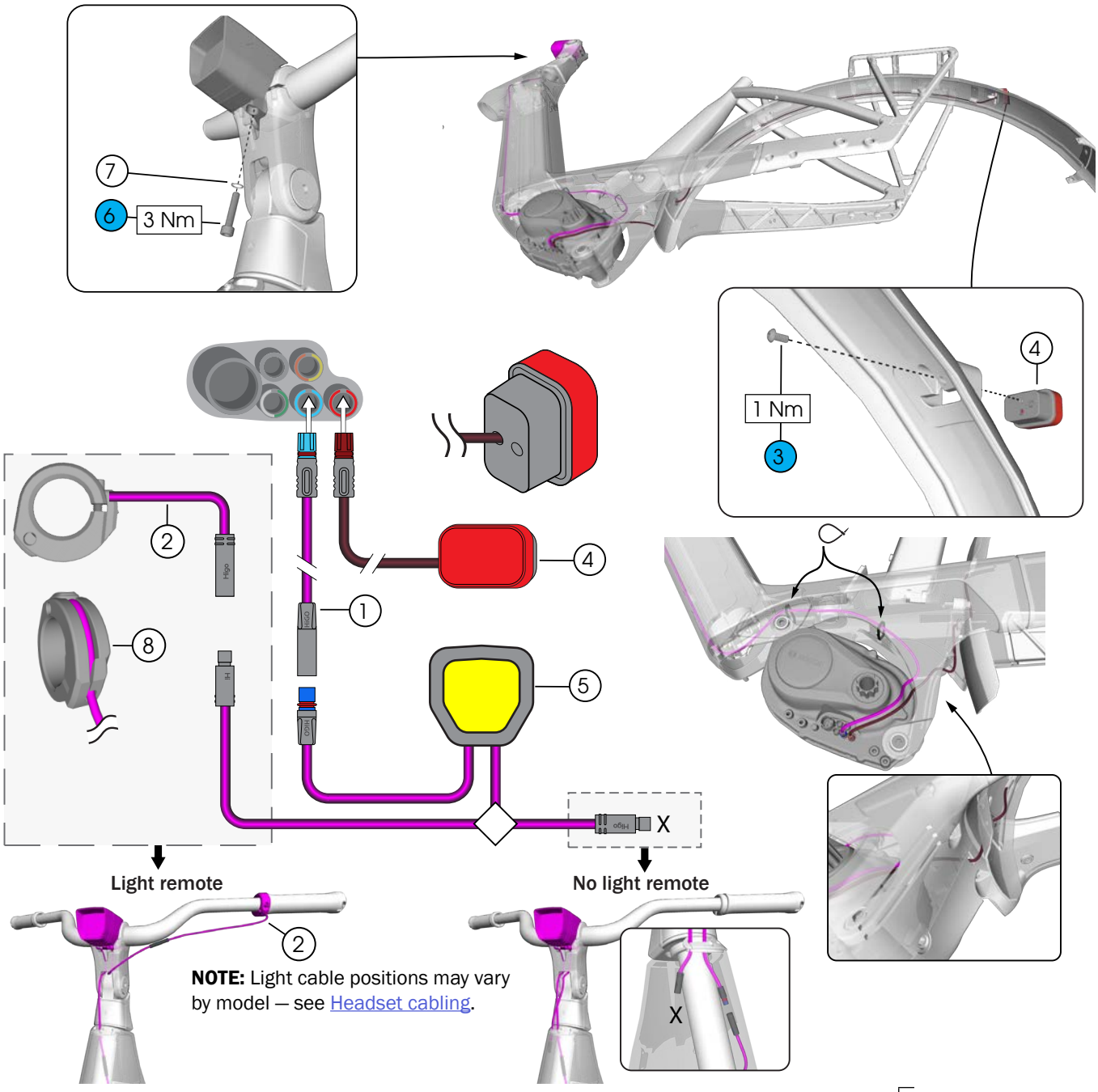

NOTE: Light cable positions may vary by model — see Headset cabling.

1. Front light cable — *W5331590*
2. Light remote — *W5328351*
3. Fastener (M3 x 6 mm)
4. Rear light
   - North America — *W5330939*
   - Rest of world — *W5330938*
5. Front light
   - North America — *W5330941*
   - Rest of world — *W5330940*
6. Fasteners (M5 x 25 mm)
7. Split washer (M5)
8. Light remote mount — *W5345521*

Remote

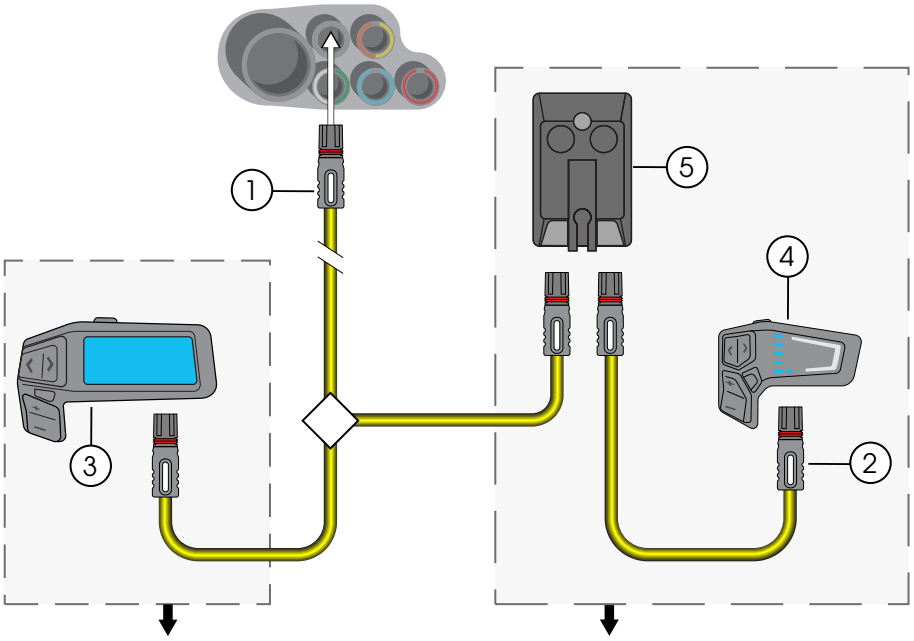

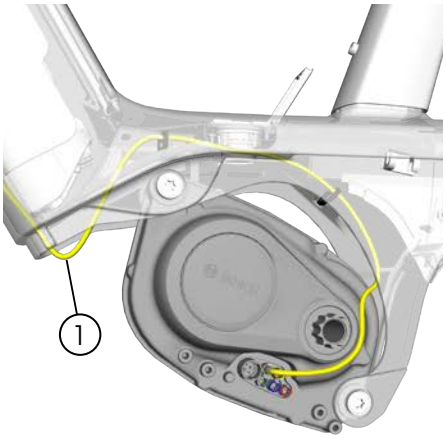

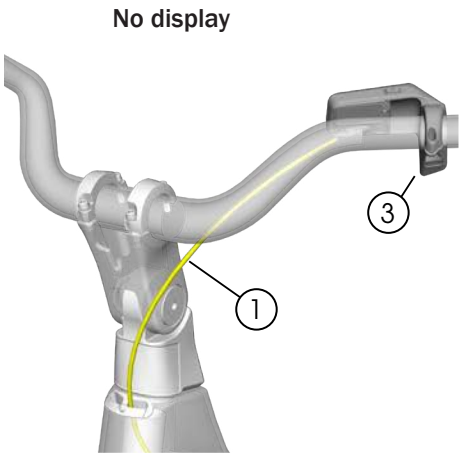

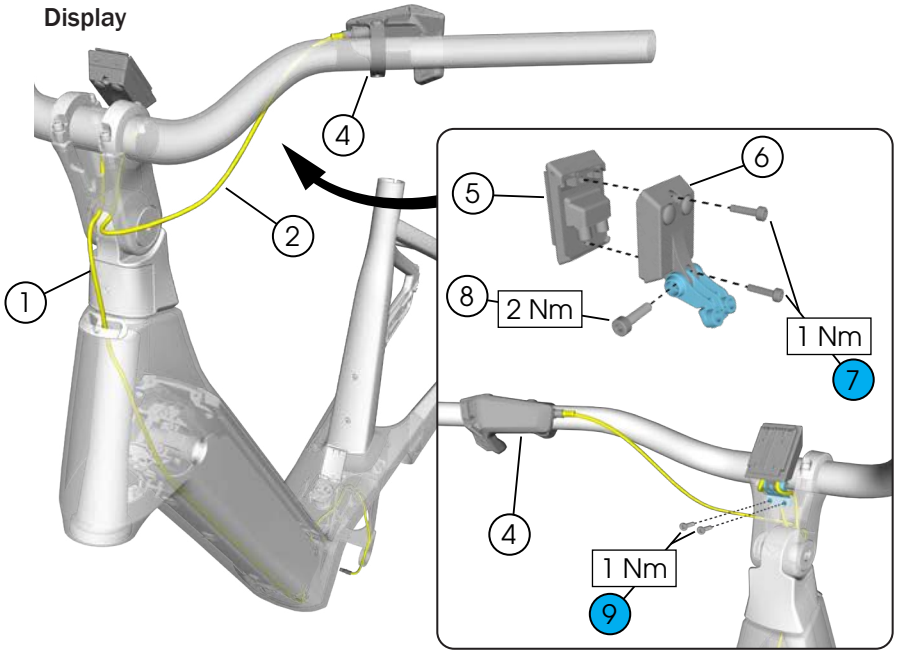

1. HMI cable (1,500 mm) — **EB12.120.005*
2. HMI cable (350 mm) — **EB12.120.009*
3. Remote, Purion 200 — **EB13.200.00B*
4. Remote, LED — **EB13.100.00E*
5. Display interface — **EB13.100.00A*
6. Display adapter
7. Fastener (M3 x 12 mm)
8. Fastener (M4 x 16 mm)
9. Fasteners (M3 x 10 mm) — *W285213*

5344974

**Bosch part number*

Charge socket

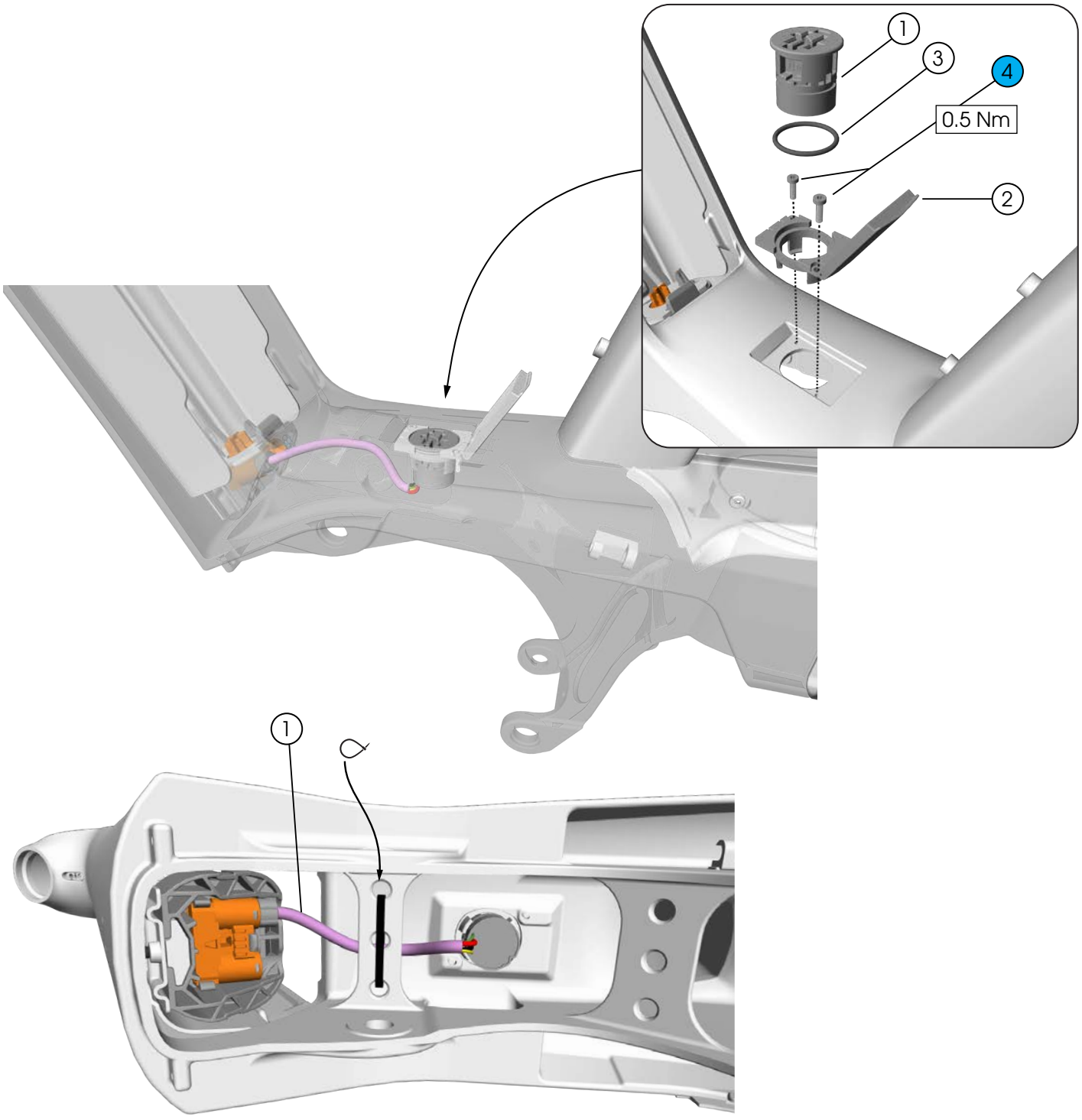

1. Charge socket/cable — **EB12.120.049*
2. Charge port cover — *W5251862*
3. O-ring — **EB12.120.019*
4. Fasteners (M3 x 10 mm) — *W5252139*

**Bosch part number*

Headset cabling (rest of world)

NOTE: These configurations are for bikes sold outside of North America — see Headset cabling (North America).

Mechanical (no light remote or display)

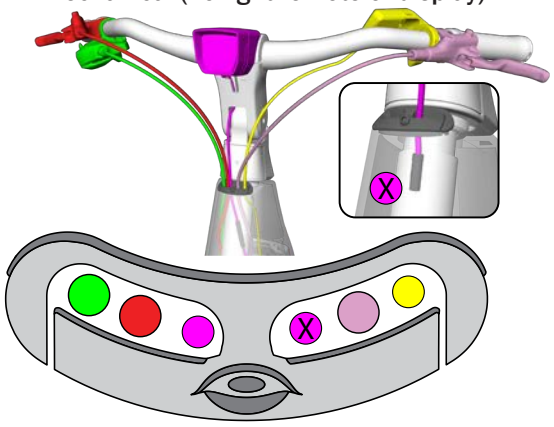

Mechanical (with light remote and display)

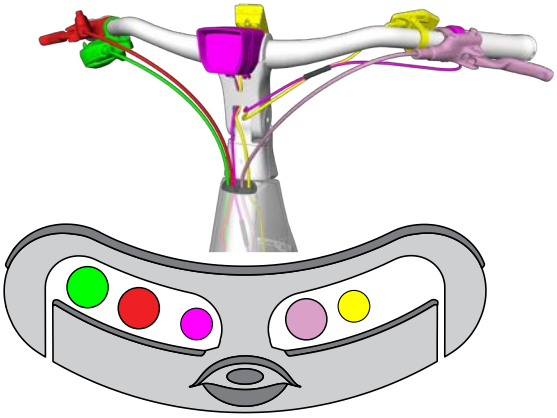

Enviolo

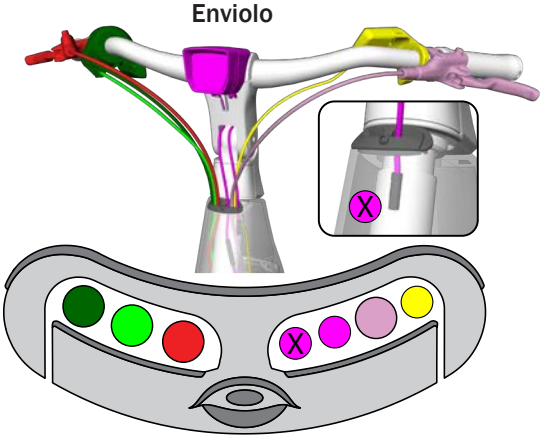

Nexus

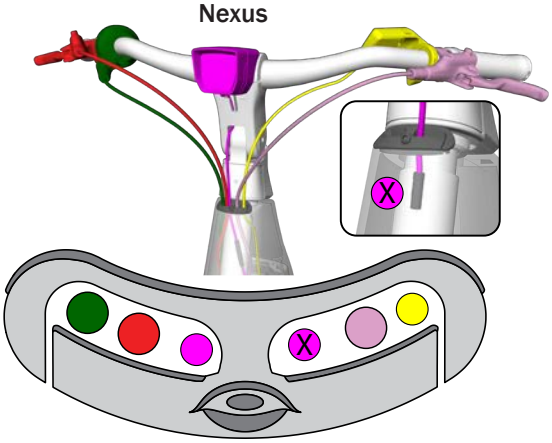

Enviolo Auto

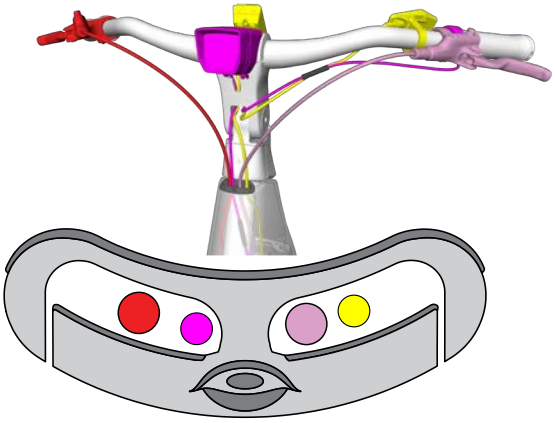

- Shift cable
- Shift cable (internal gear hub)
- Brake hose
- Front light / cable
- Light remote (disconnected)
- HMI cable (1,500 mm) — *EB12.120.005 (Bosch)*
- Front brake hose

Headset cabling (North America)

NOTE: These configurations are for bikes sold in North America — see Headset cabling (rest of world).

Mechanical (no light remote)

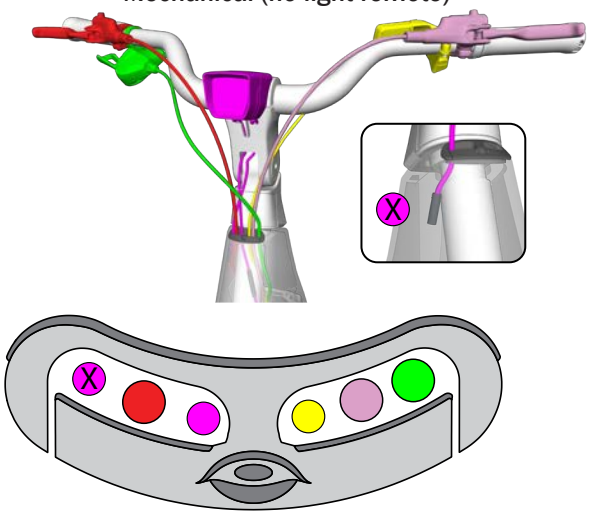

Nexus Di2

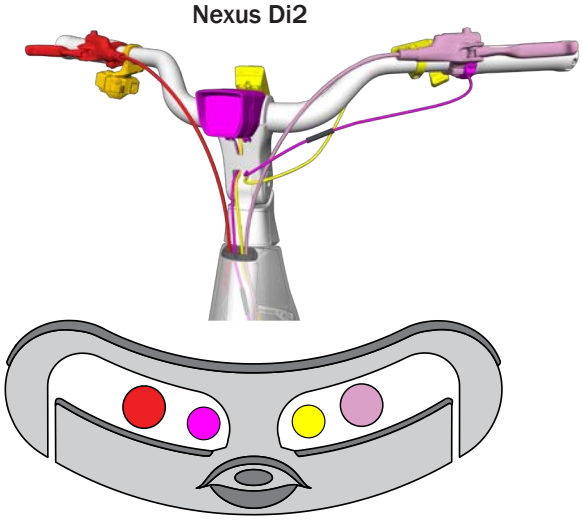

Mechanical (with light remote)

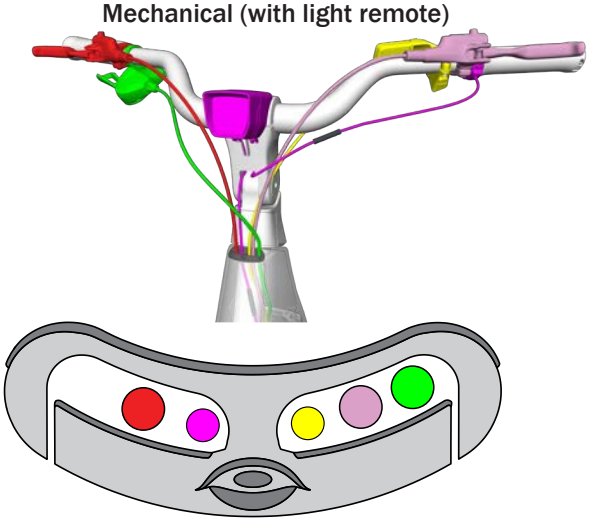

- Shift cable
- Brake hose
- Front light / cable
- Light remote (disconnected)
- HMI cable (1,500 mm) — *EB12.120.005 (Bosch)*
- Front brake hose

Headset

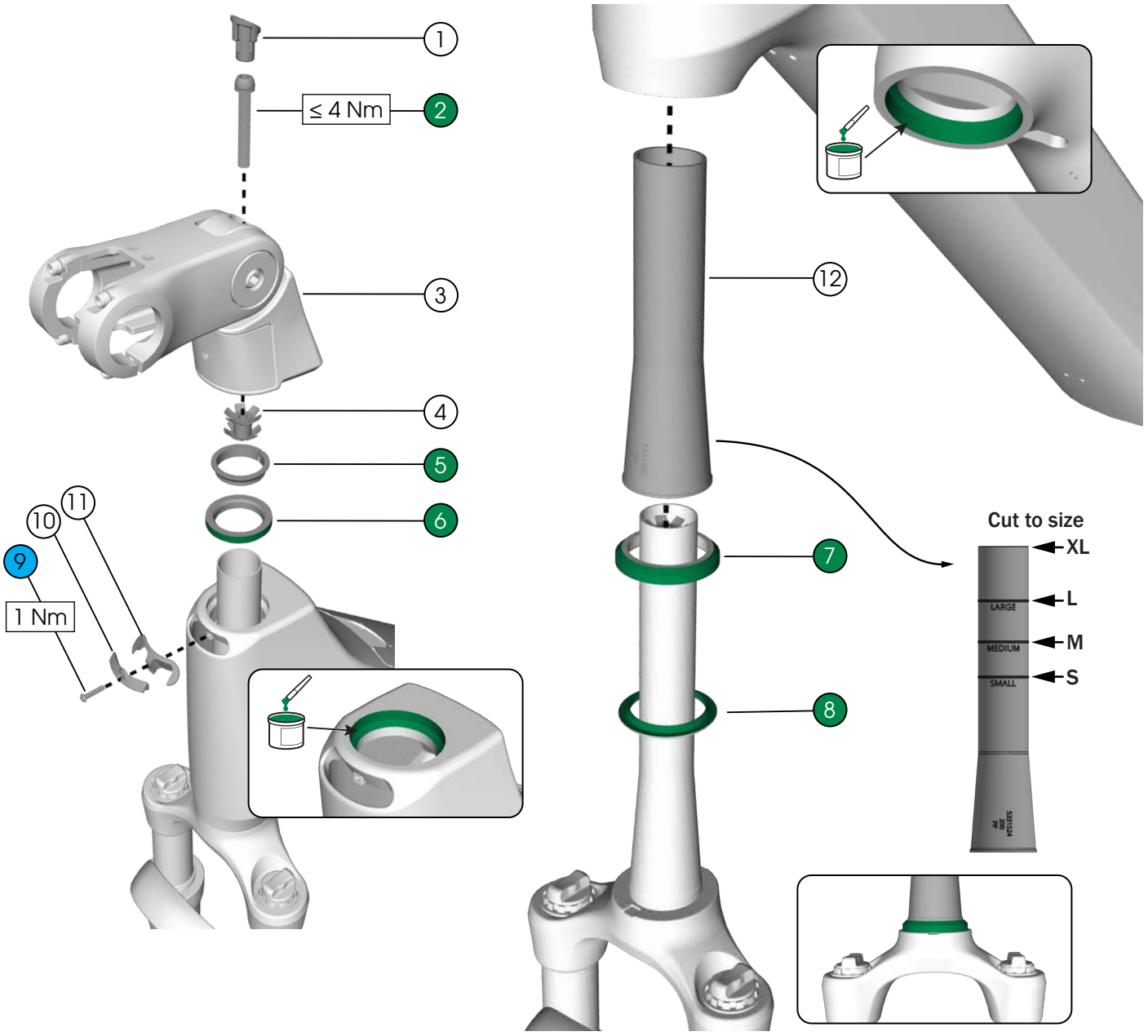

1. Plug
2. Fastener (M6 x 35 mm) 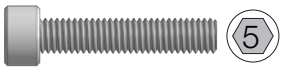
3. Stem — *W5330566*
4. Compression nut (1 1/8" / 28.6 mm) — *63377*
5. Compression ring — *W532842*
6. Headset bearing, upper — *581403*
7. Headset bearing, lower — *W532843*
8. Crown race — *W532844*
9. Fastener (M3 x 14 mm) 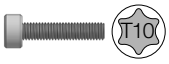
10. Grommet, upper
11. Grommet, lower

5347290

12. Steerer tube sleeve — *W5331524*

Stem

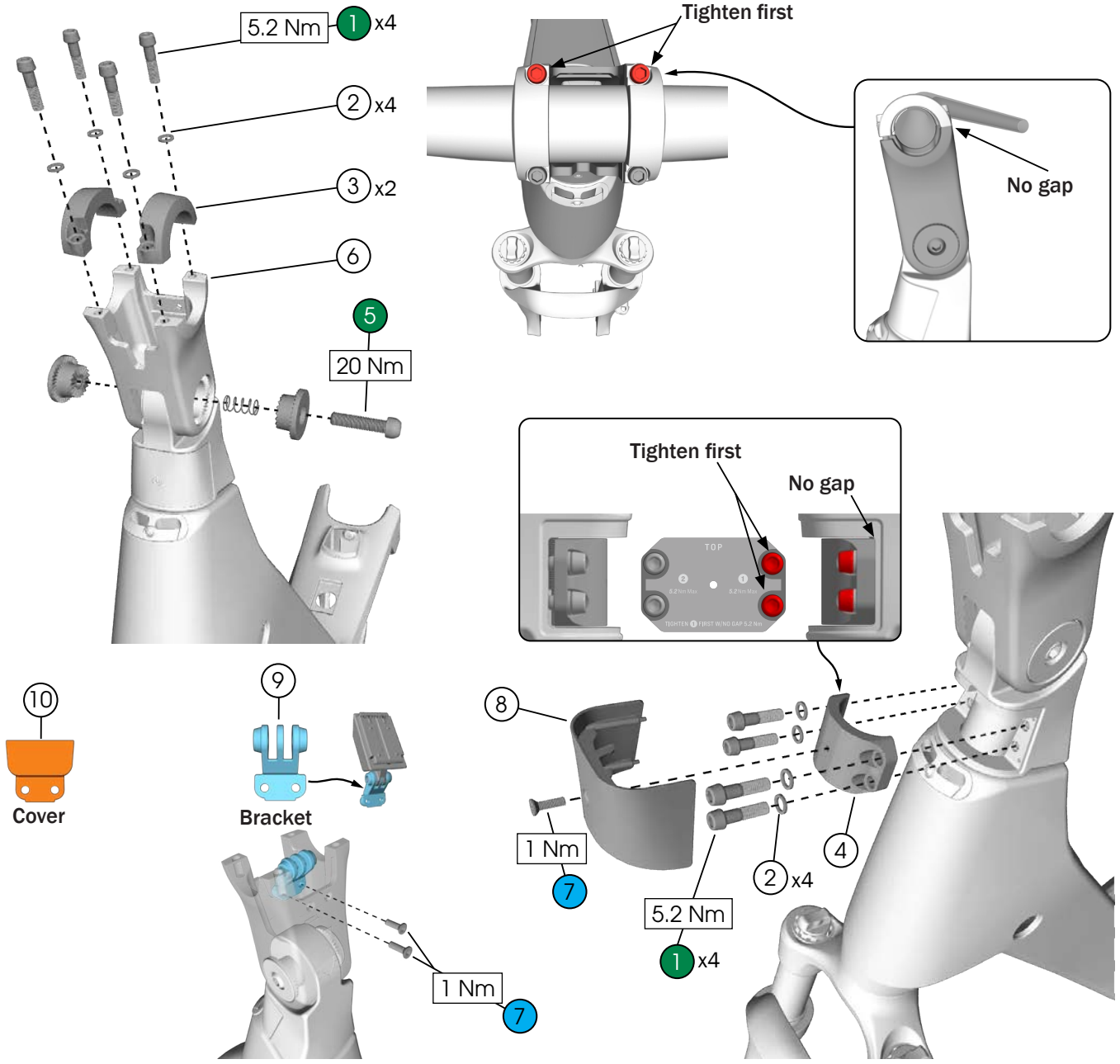

1 Fasteners (M5 x 18 mm) — 4
2 Washers (M5)
3 Faceplates
4 Steerer clamp
5 Fastener (M8 x 35 mm) — 6
6 Stem

W5330566

7 Fasteners (M3 x 10 mm) — *W285213* — T10
8 Clamp cover — *W5330576*
9 Bracket — *5344974*
10 Gap cover — *5330578*

Adjust the stem angle

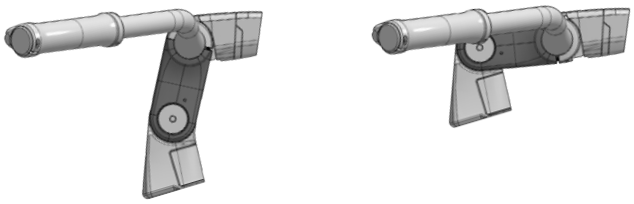

Extended Compressed

NOTE: Some early production models have markings on the stem.

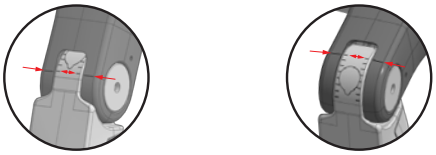

1. Loosen the light mount fastener.

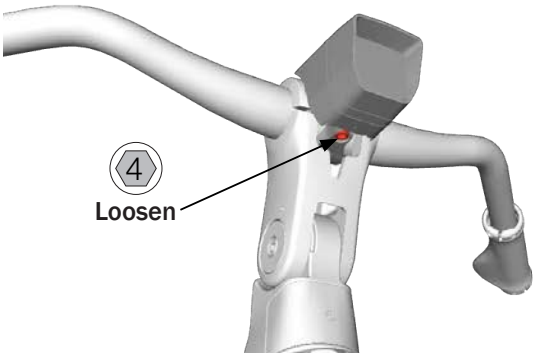

2. Loosen the stem fastener — adjust the stem angle, then tighten the fastener.

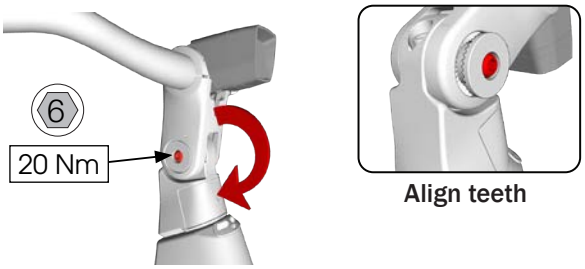

3. Loosen the upper faceplate fasteners, then the bottom fasteners.

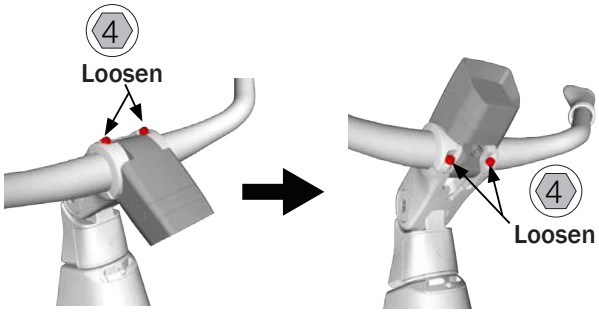

4. Adjust the handlebar angle to about 45° and fully tighten the upper fasteners. Then fully tighten the bottom fasteners.

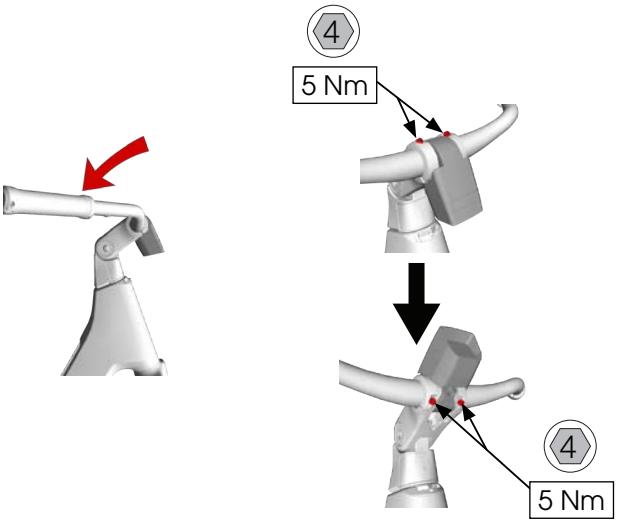

5. Angle the front light so the top is parallel to ground and fully tighten the fastener. If any cables are in front of the light, push them into the head tube to reduce the external cable length.

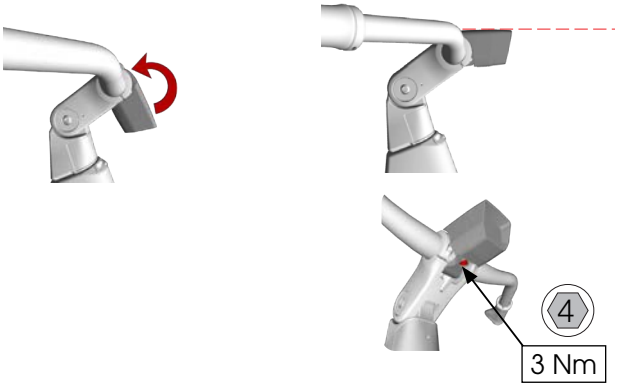

Drive unit

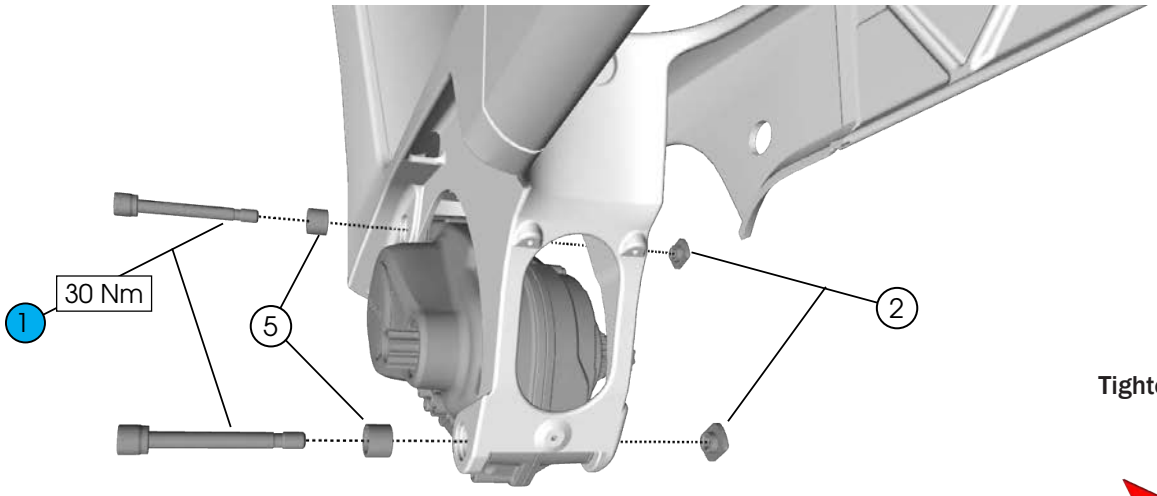

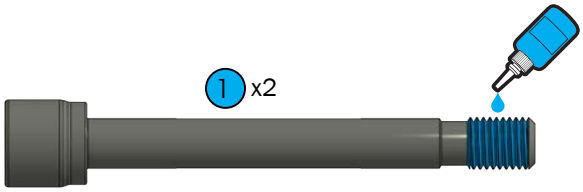

Tighten counter-clockwise

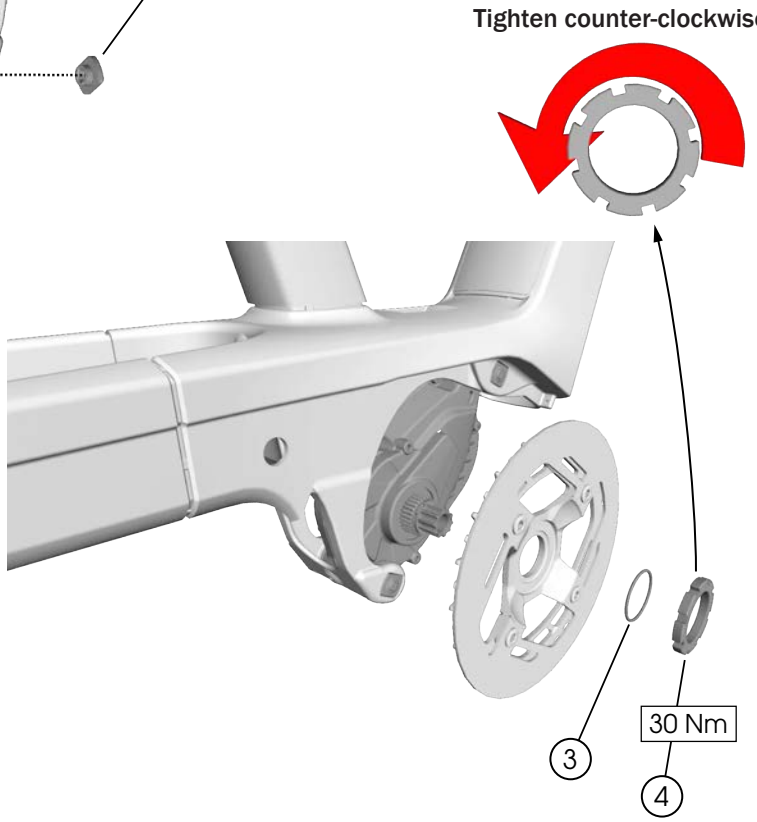

1. Fasteners, short (M8 x 68.7 mm) — **EB11.200.12G* (T40)
2. Nut-square (M8) — **EB11.200.03C*
3. O-ring — **1270.016.119*
4. Lockring — **EB11.200.0JH*
5. Insert sockets — **EB11.200.12F*

**Bosch part number*

Drive unit covers and chainguard

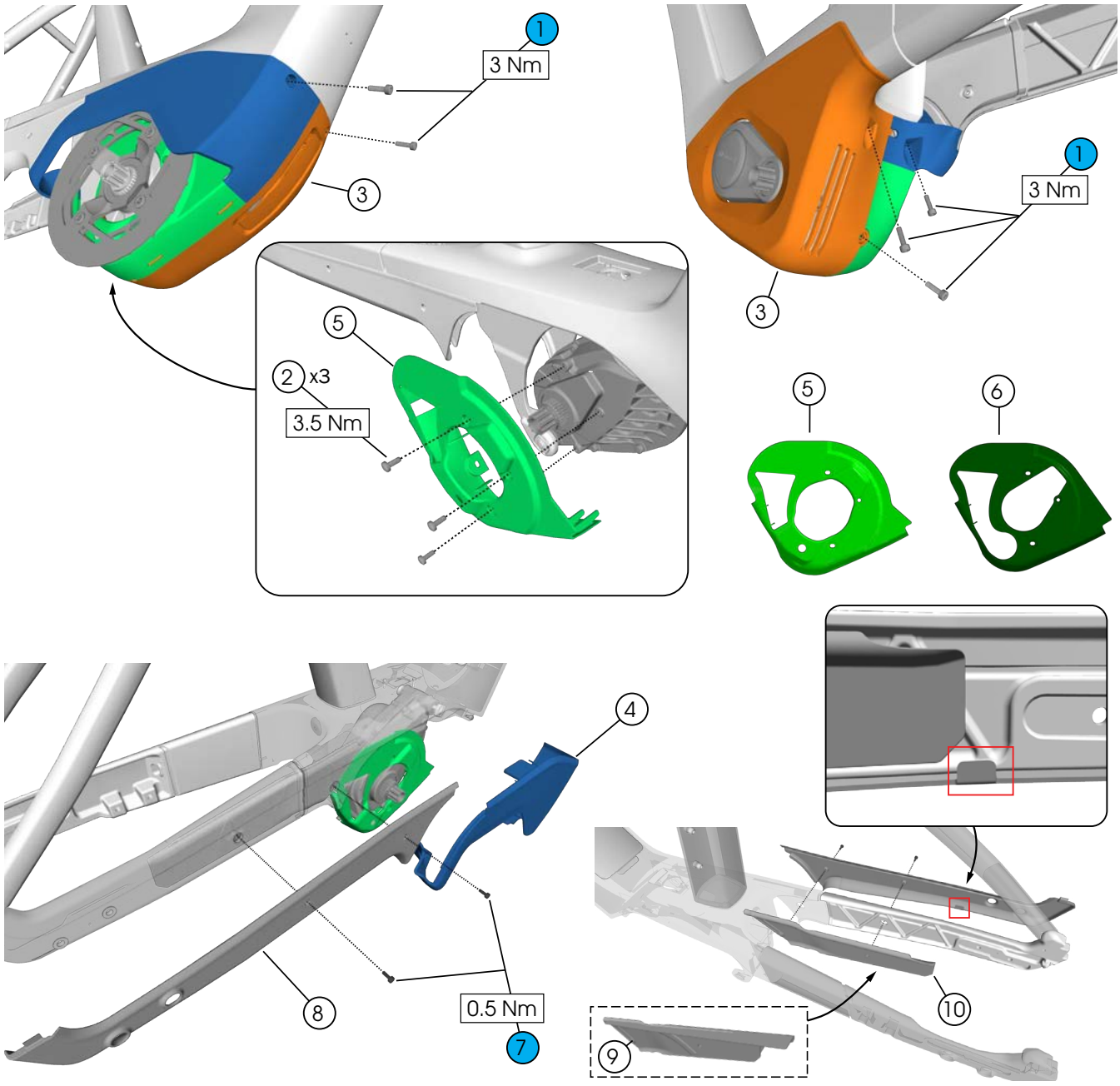

1. Fasteners (M4 x 14 mm) — 3
2. Fasteners (M4 x 10 mm) — *EB11.200.0NU (Bosch)* — T20
3. Drive unit cover, non-drive side — *W5342967*
4. Outer chainguard — *W5342955*
5. Drive unit cover, drive side — *W5342956*
6. Drive unit cover, drive side (IGH Di2 only) — *W5348189*
7. Fasteners (M3 x 8 mm) — 2.5
8. Chainstay cover, outer — *W5333226*
9. Chainstay cover, inner (internal gear hub) — *W5333227*
10. Chainstay cover, inner (rear derailleur) — *W5333226*

Install the drive unit and covers

BEFORE YOU BEGIN:

- (belt drive only) Move both dropouts forward to relieve tension on the belt. See Adjust the belt tension.
- Loosen outer chainstay cover fasteners.

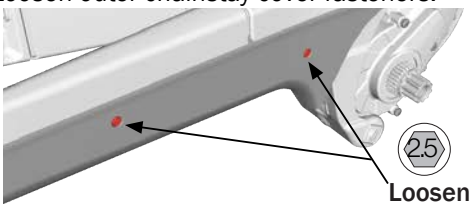

1. Install the drive unit.

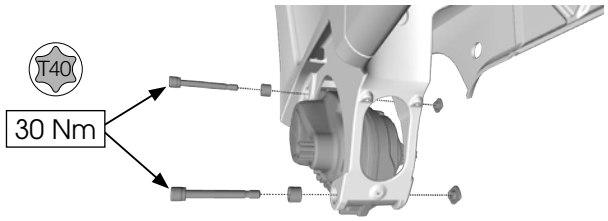

2. Plug in all cables and verify the e-system works properly.

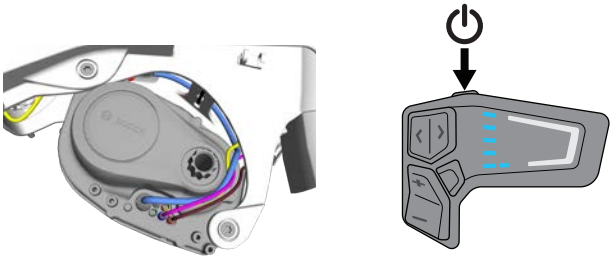

3. Install the driveside drive unit cover.

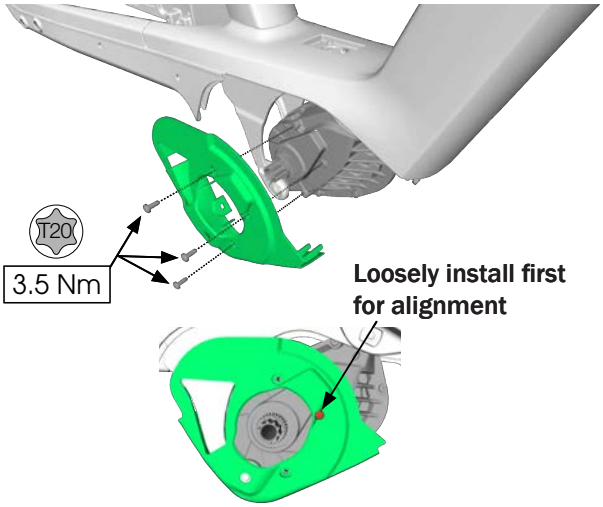

4. Install the chainring/beltring — place a crank over the non-driveside spindle for leverage when tightening.

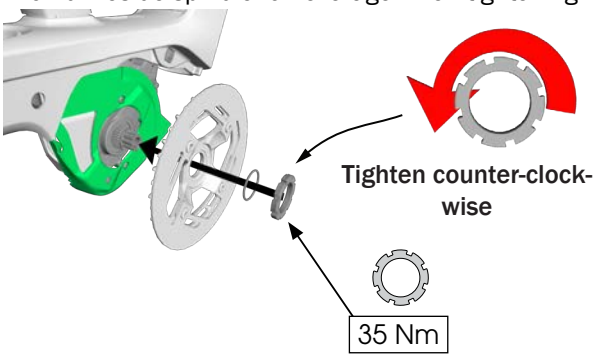

5. Fit the non-driveside drive unit cover on.



6. Install the belt/chain.

7. Fit the outer chainguard on.

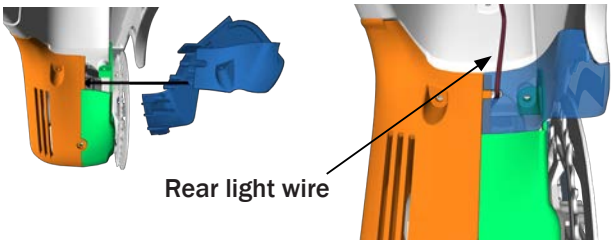

8. Fully tighten all fasteners.

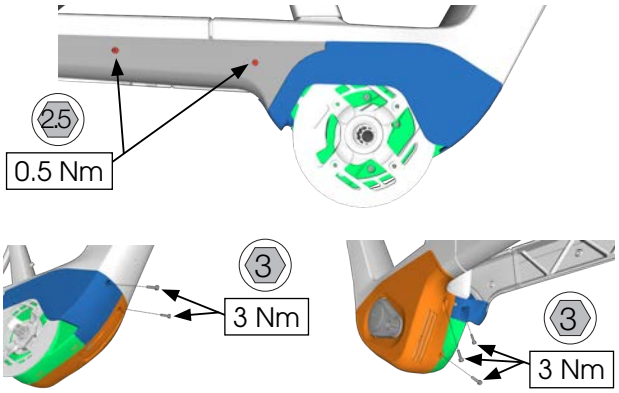

Battery dock and cable tray

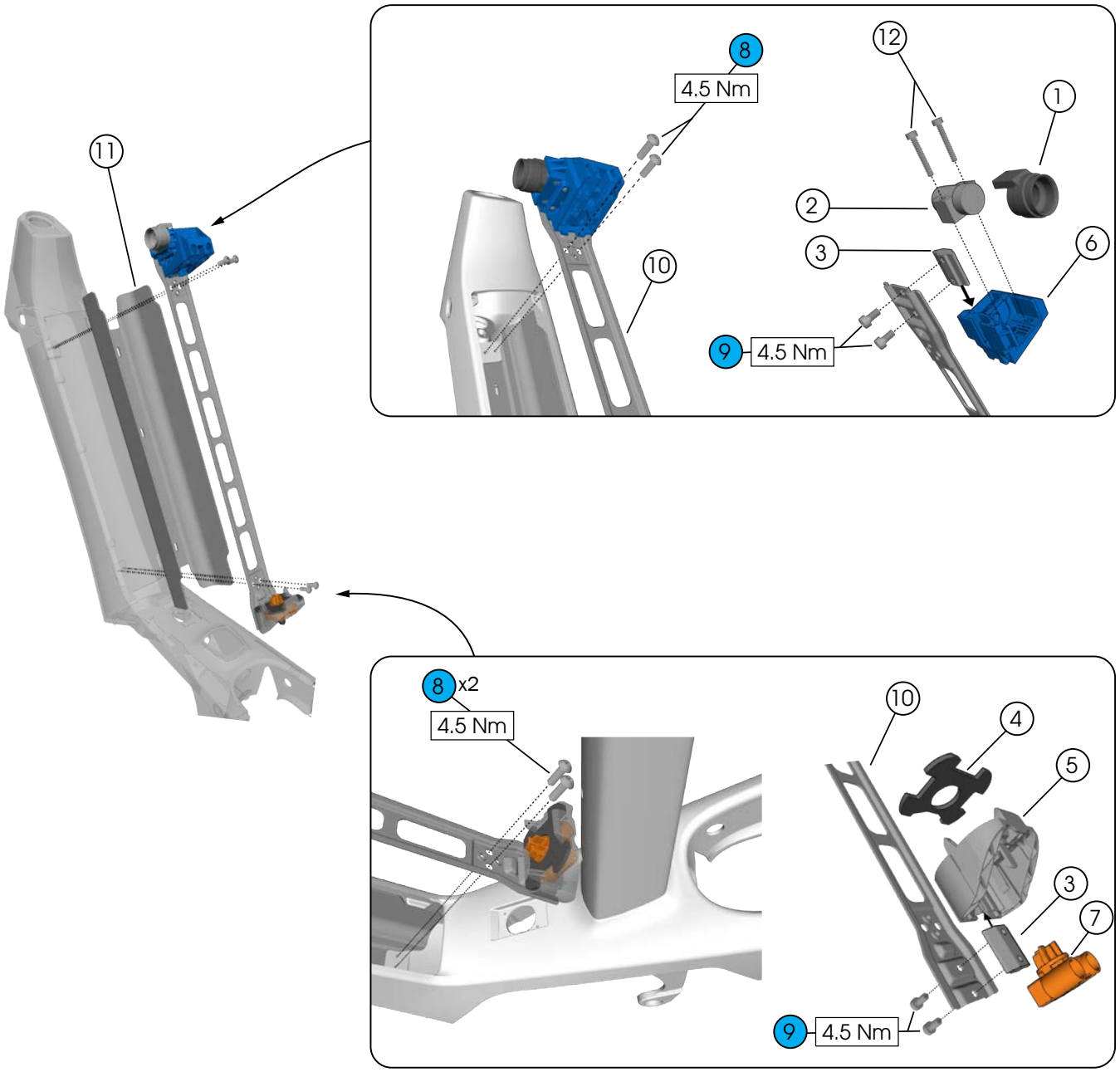

1. Lock grommet — *W5325174*
2. Lock cylinder — *W5329845*
3. Clamping plates — **EB12.200.0LG*
4. Damper foil — **EB12.200.0LK*
5. Cradle — **EB12.200.0LJ*
6. Locking assembly — **EB12.200.0L7*
7. Battery outlet — **EB12.100.015*
8. Fasteners (M5 x 14 mm) 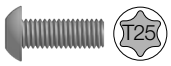

9. Fasteners (M5 x 9 mm) 

10. Rail — **EB12.200.0NT*
11. Cable tray — *W5332943*
12. Fasteners (M4 x 25 mm) 

Battery

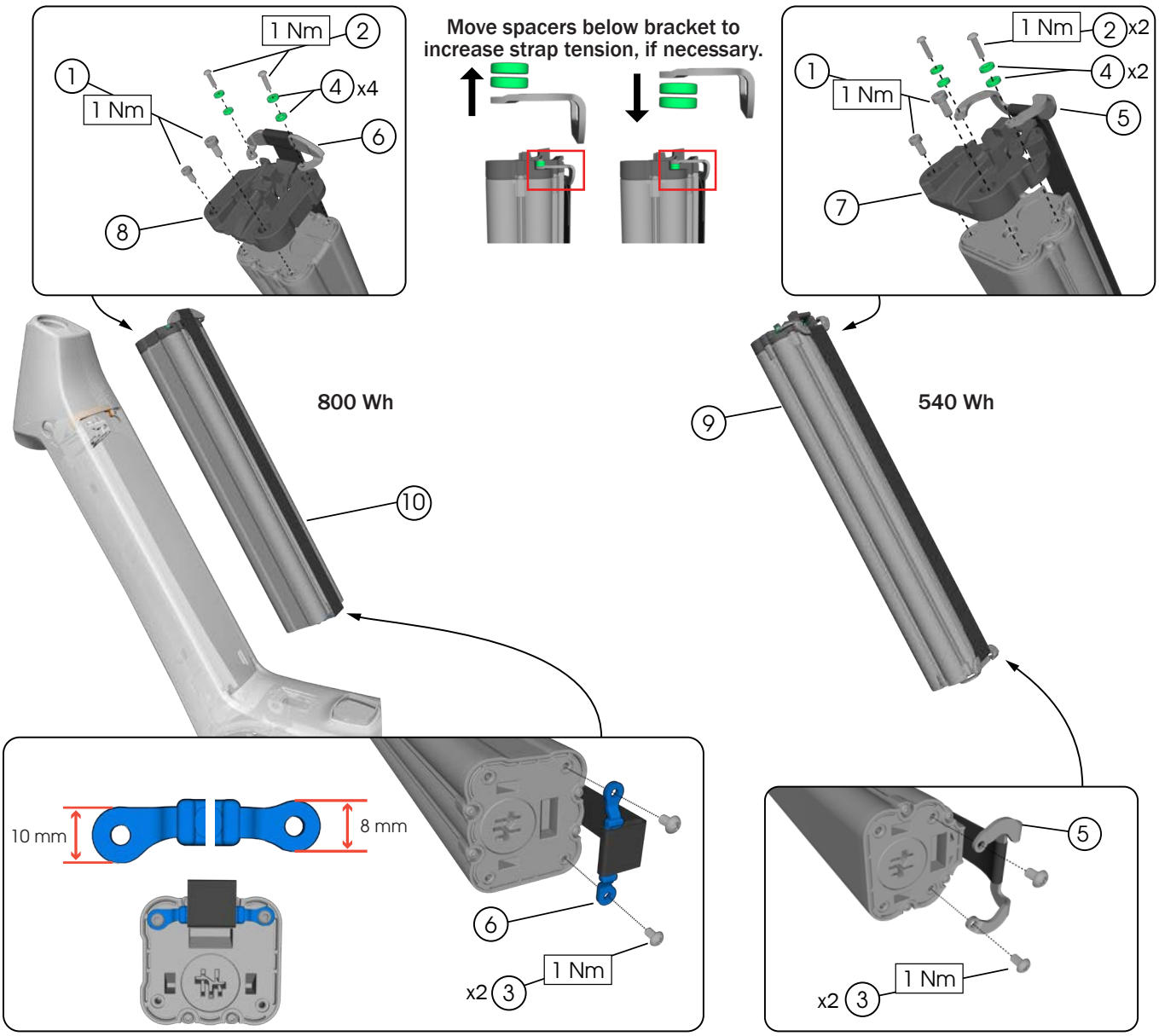

1. Fasteners (M4 x 8 mm) — **F04N.002.664*
2. Fasteners (M4 x 14 mm)
3. Fasteners (M4 x 6 mm)

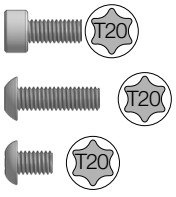

4. Tensioning spacers (2 mm)
5. Handle, 540 Wh battery — *5344608*
6. Handle, 800 Wh battery — *5344607*
7. Mounting plate, 540 Wh battery — **EB12.200.0L2*
8. Mounting plate, 800 Wh battery — **EB12.200.0L4*
9. Battery, 540 Wh
   - North America — **EB12.100.05R*
   - Rest of world — **EB12.100.05R*
10. Battery, 800 Wh
    - North America — **EB12.100.051*
    - Rest of world — **EB12.100.04Z*

**Bosch part number*

Battery cover

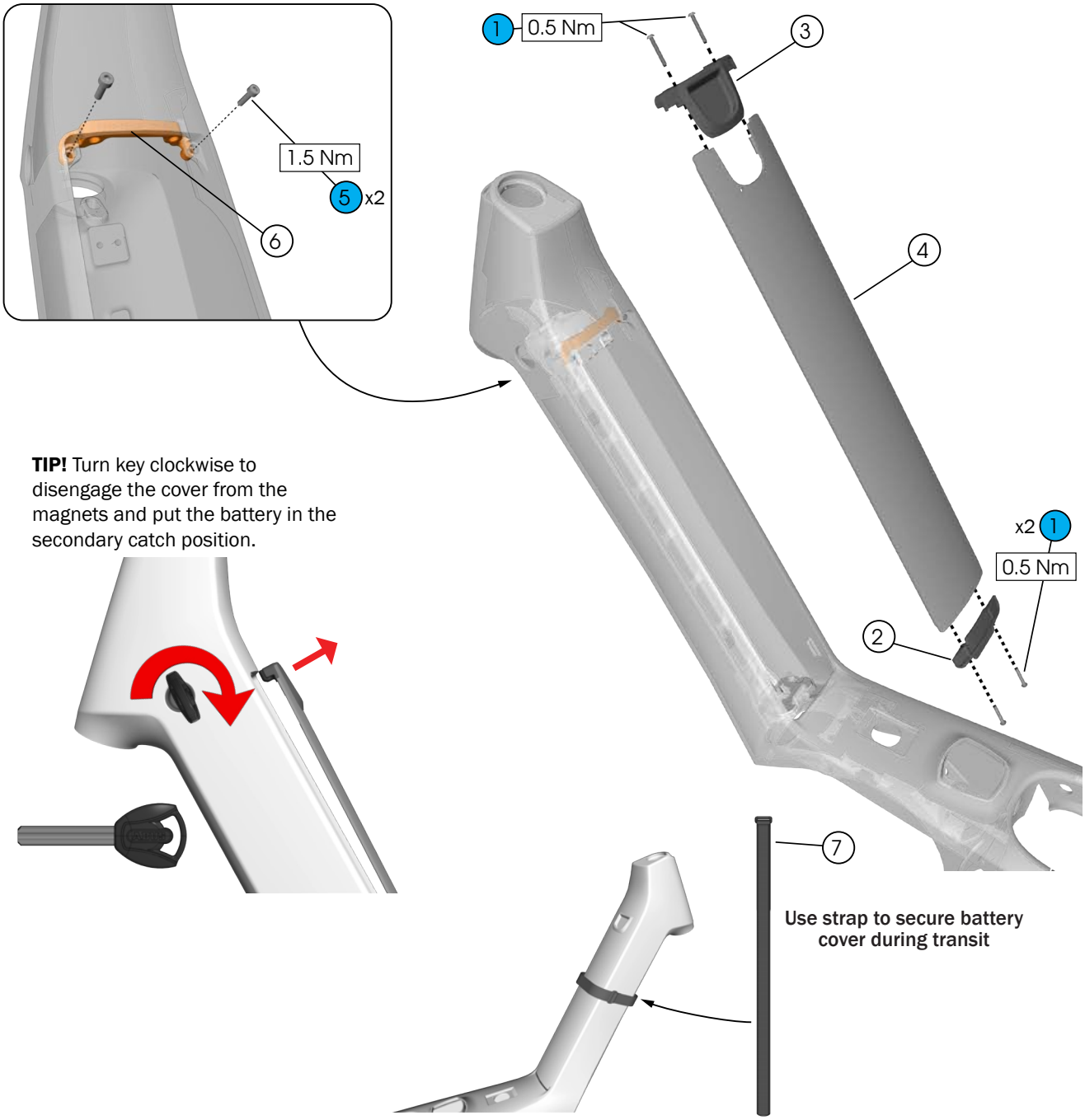

TIP! Turn key clockwise to disengage the cover from the magnets and put the battery in the secondary catch position.

1 Fasteners (M3 x 20 mm) — 2

2 Bracket, lower
3 Bracket, upper
— *5347291*

4 Cover (color-matched)
— S — **5346472 (blue)*
— M/L/XL — **5346463 (blue)*

5 Fasteners (M3 x 10 mm) — 2.5

6 Frame bracket — *W5325173*

7 Cover strap (comes with your bike)

**Color matched part — see Trekbikes.com for full product list*

Axle and dropouts — rear derailleur

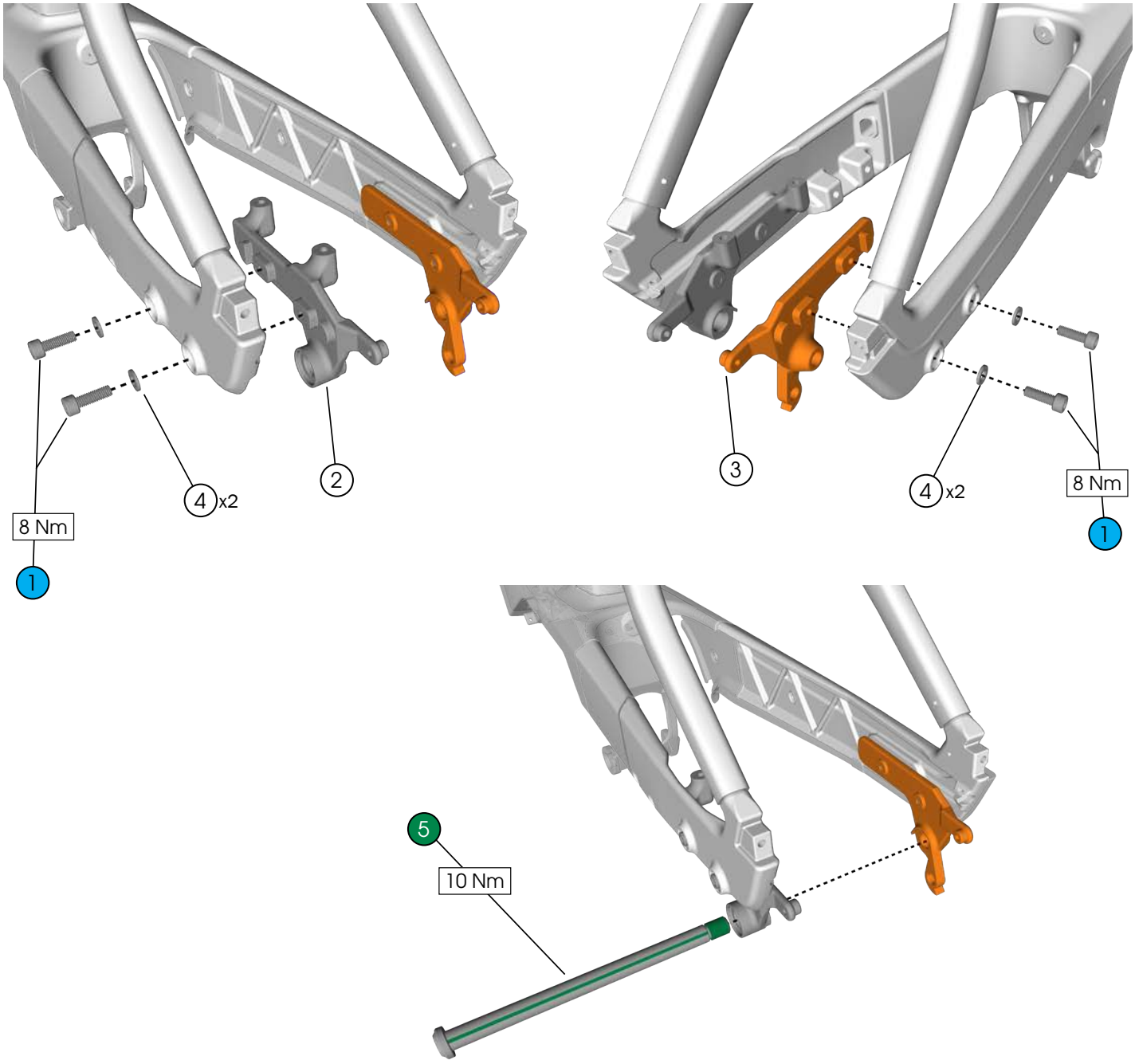

1 Fasteners (M6 x 18 mm)

2 Dropout slider, non-drive side

3 Dropout slider, drive side

5347417

4 Washers (M6)

5 Axle (M12 x 174.5 mm) — *W565791*

Rear dropouts — Nexus

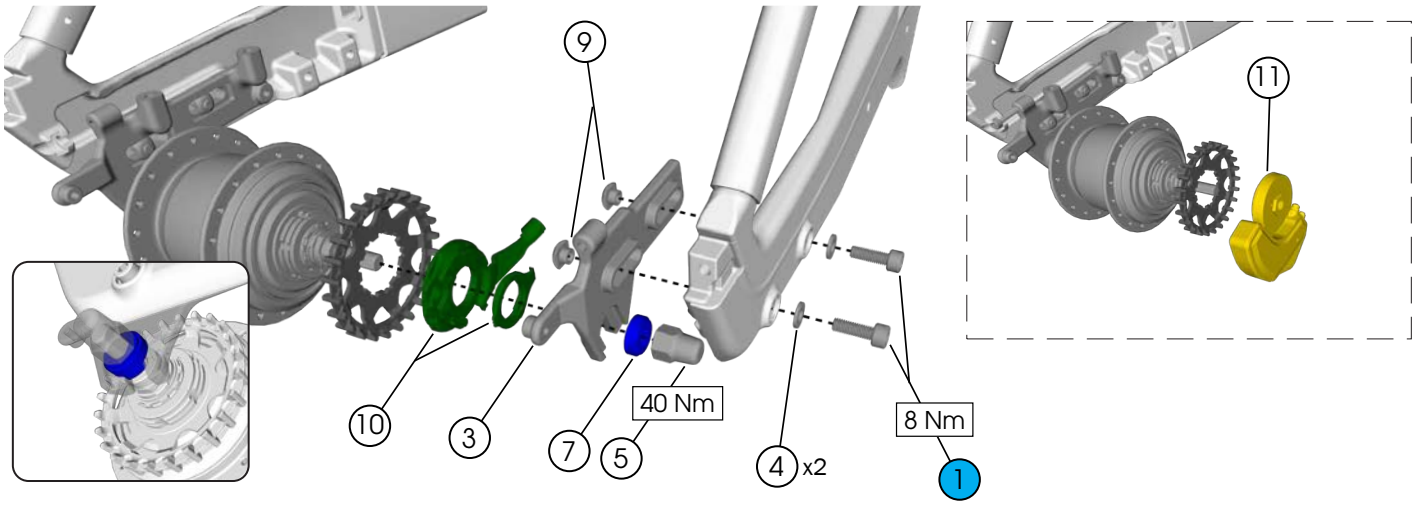

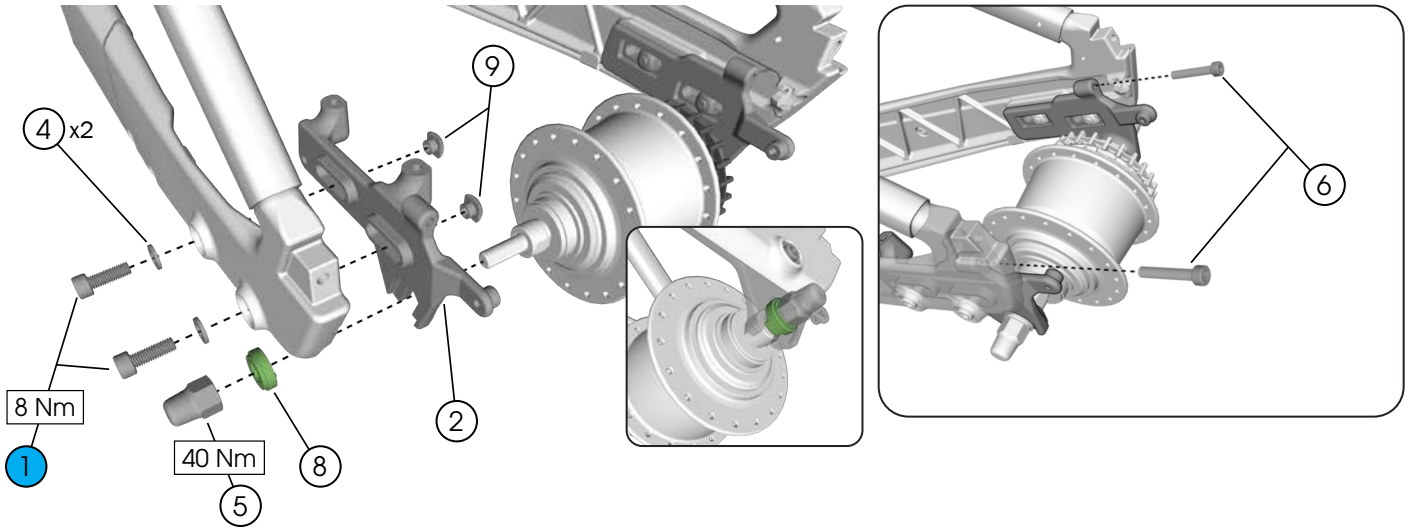

1. Fasteners (M6 x 18 mm) — 5
2. Dropout slider, non-drive side — *5347416*
3. Dropout slider, drive side — *5347416*
4. Washers (M6)
5. Cap nuts (3/8") — **Y31414010* — 15
6. Fasteners (M5 x 30 mm) — *5332529* — 4
7. Non-turn washers, drive side — **Y34R85010*
8. Non-turn washers, non-drive side — **Y34R85000*
9. Square nuts (M6) — *W5325889*
10. Cassette joint unit — **Y7ZP98030*
11. Di2 motor unit — *MU-UR520 (Shimano)*

**Nexus part number*

Rear dropouts — Enviolo

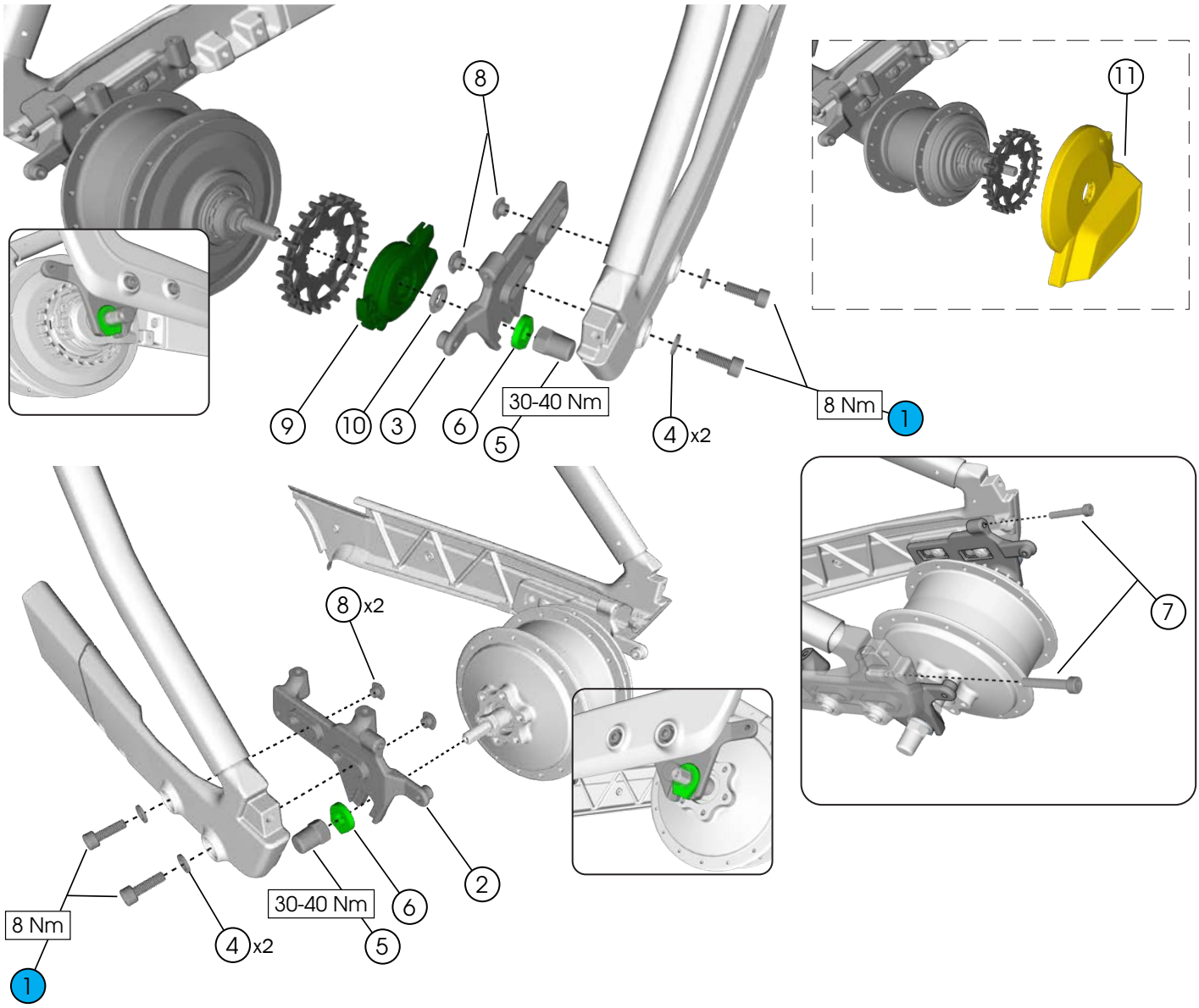

1. Fasteners (M6 x 18 mm) — 5
2. Dropout slider, non-drive side — *5347416*
3. Dropout slider, drive side — *5347416*
4. Washers (M6)
5. Axle nuts (15 mm) — **HW-ANUT-OE* — 15
6. Non-turn washers — **HW-WASH-OE*
7. Fasteners (M5 x 30 mm) — *5332529* — 4
8. Square nuts (M6) — *W5325889*
9. Hub interface — **MHI-MT-40T-OE*
10. Locknut — **HW-MA-LNUT-OE*
11. AUTOMATiQ hub interface — **AHI-Pro-44T-OE*

**Enviolo part number*

Adjust the belt tension

DESIRED BELT TENSION: 50 Hz / 40 lbs / 1.0-1.5 mm

1. Measure the belt tension using a tension gauge such as the Gates Krikit Tension Gauge. Move on to Step 2 if it is not within the values listed above.

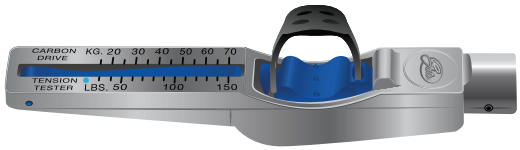

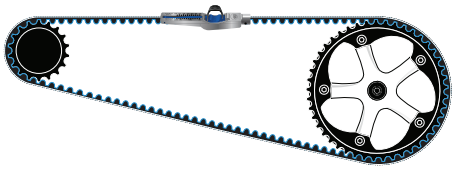

Source: Gates Corporation

2. Loosen all four dropout slider fasteners 1/2 turn.

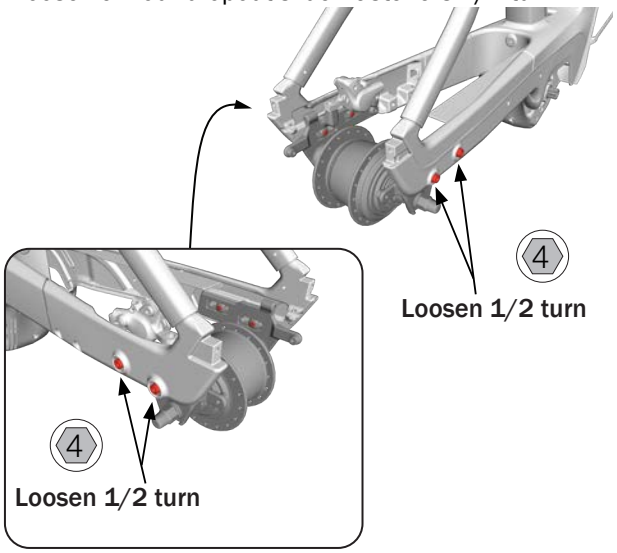

3. Loosen or tighten the tension fasteners 1/4 turn at time (depending on if the belt tension is too tight or too loose). Adjust both fasteners the same.

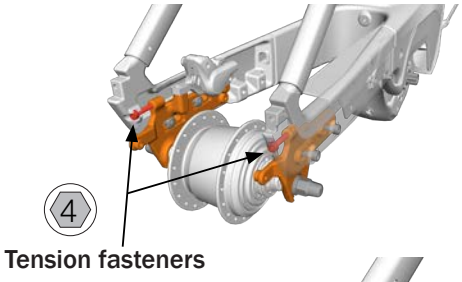

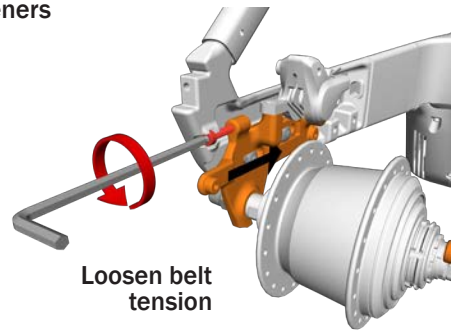

4. Measure the belt tension at four different belt positions. Adjust the belt tension as necessary (see Step 3).

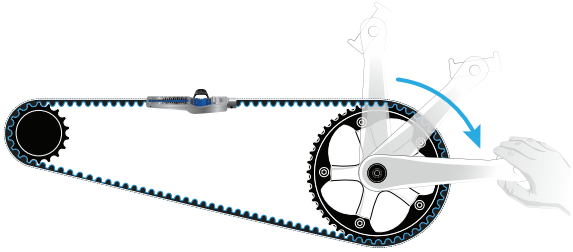

Source: Gates Corporation

5. Tighten the four dropout slider fasteners.

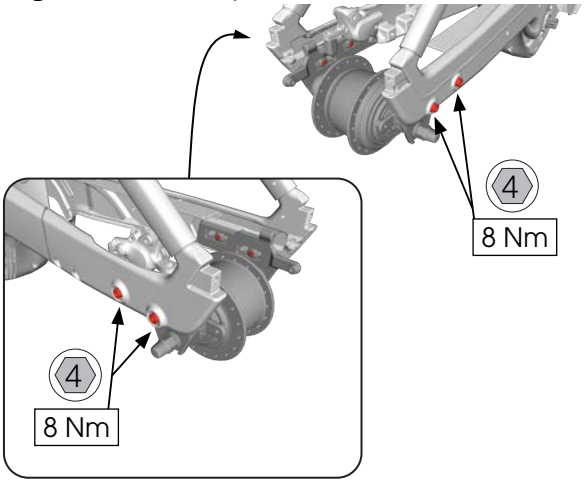

Front fender

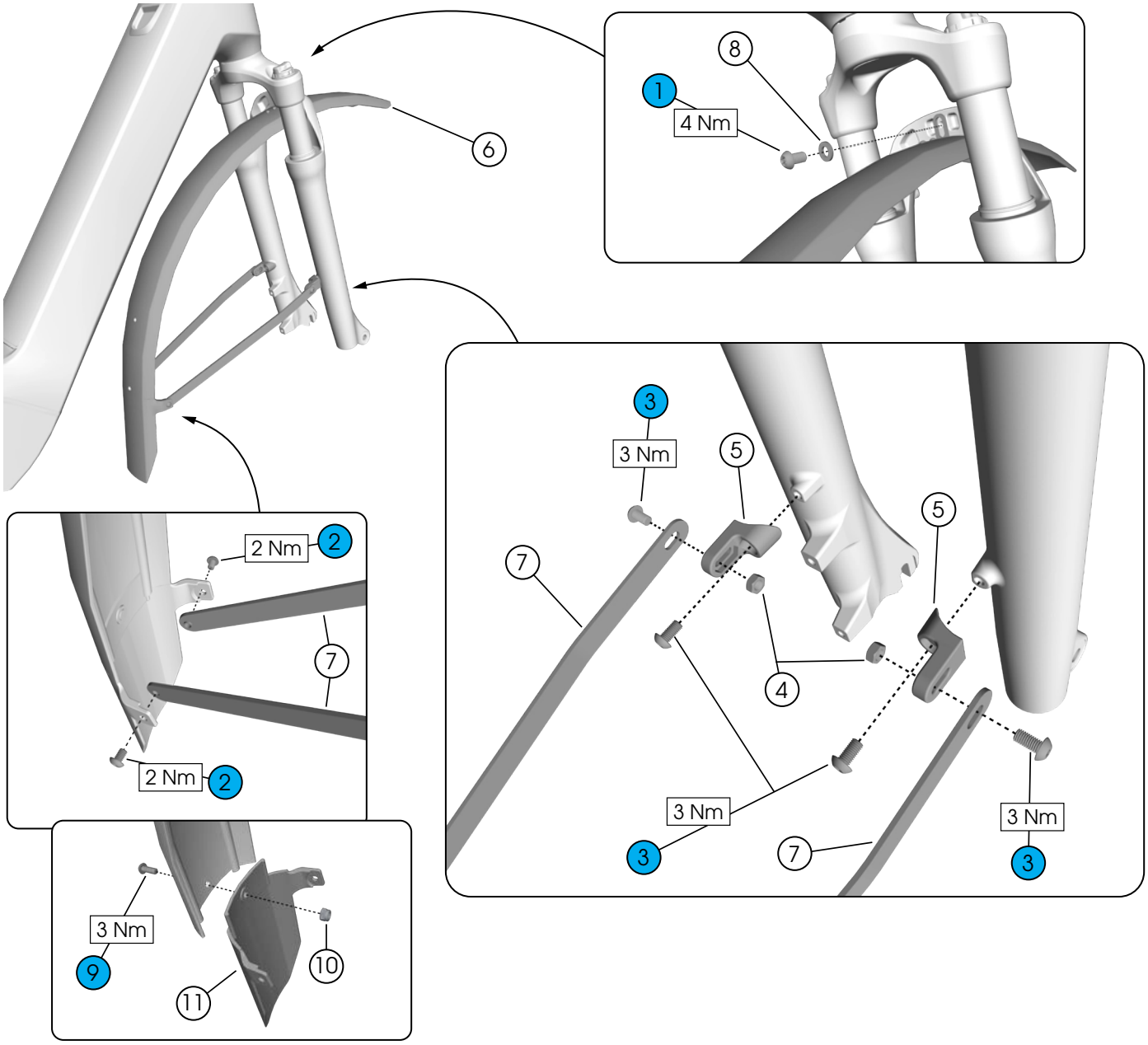

1. Fastener (M6 x 10 mm)
2. Fasteners (M4 x 6 mm)
3. Fasteners (M5 x 12 mm)
4. Nuts (M5)
5. Stay mounts — *W5330790*
6. Fender — *W5328032*

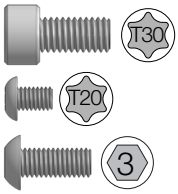

7. Stays — *5344936*
8. Washer (M6)
9. Fastener (M4 x 10 mm)
10. Lock-nut (M4)
11. Flap

5348478

Rear fender

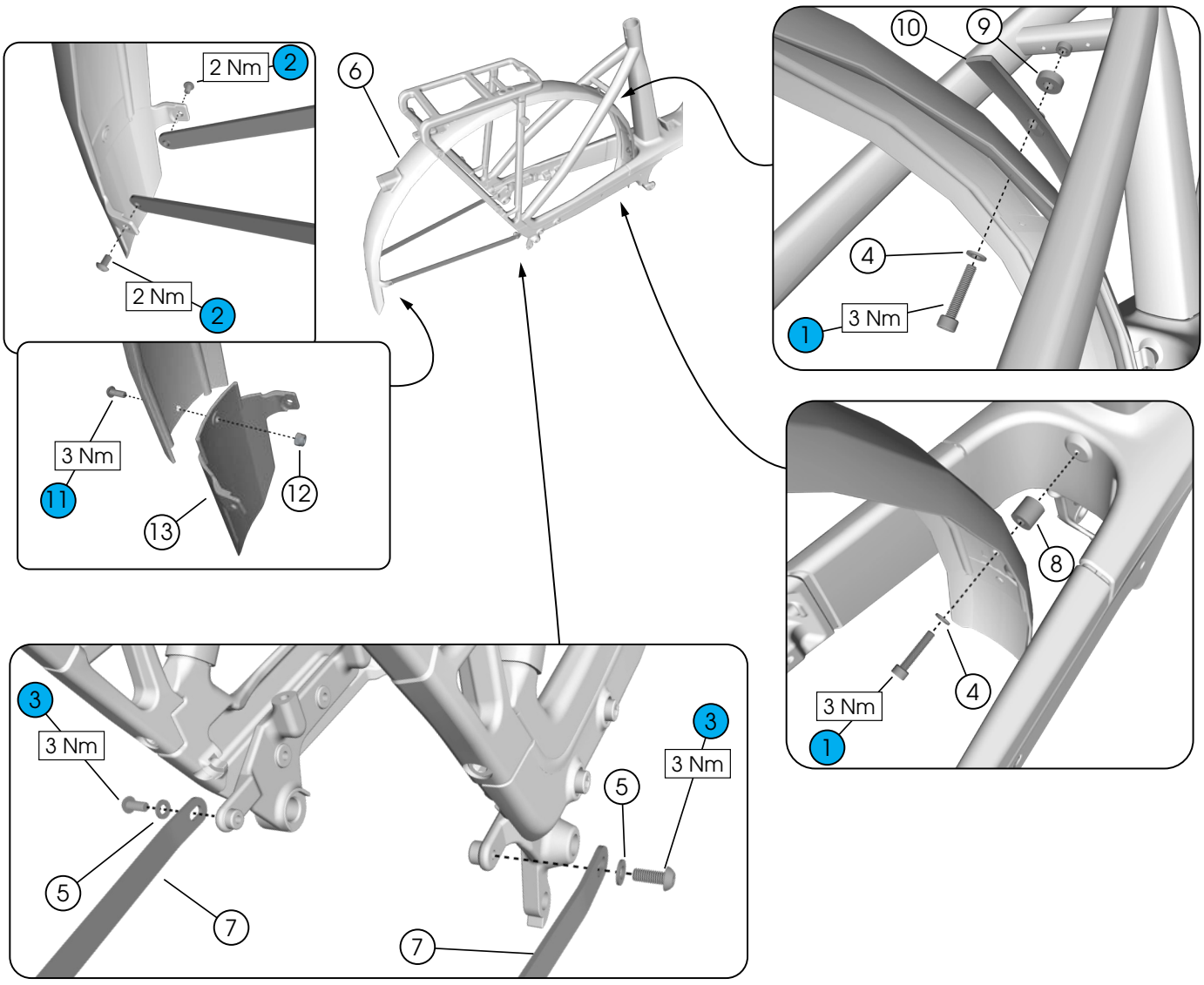

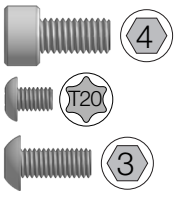

1. Fasteners (M5 x 25 mm)
2. Fasteners (M4 x 6 mm)
3. Fasteners (M5 x 12 mm)
4. Washers (M5)
5. Washers (M4)
6. Fender
   - S — *W5331761*
   - M — *W5330968*
   - L — *W5328033*
   - XL — *W5330967*
8. Spacer, 15 mm
9. Spacer, 5 mm
10. Slot cover
11. Fastener (M4 x 10 mm)
12. Lock-nut (M4)
13. Flap

5348478

Rear rack

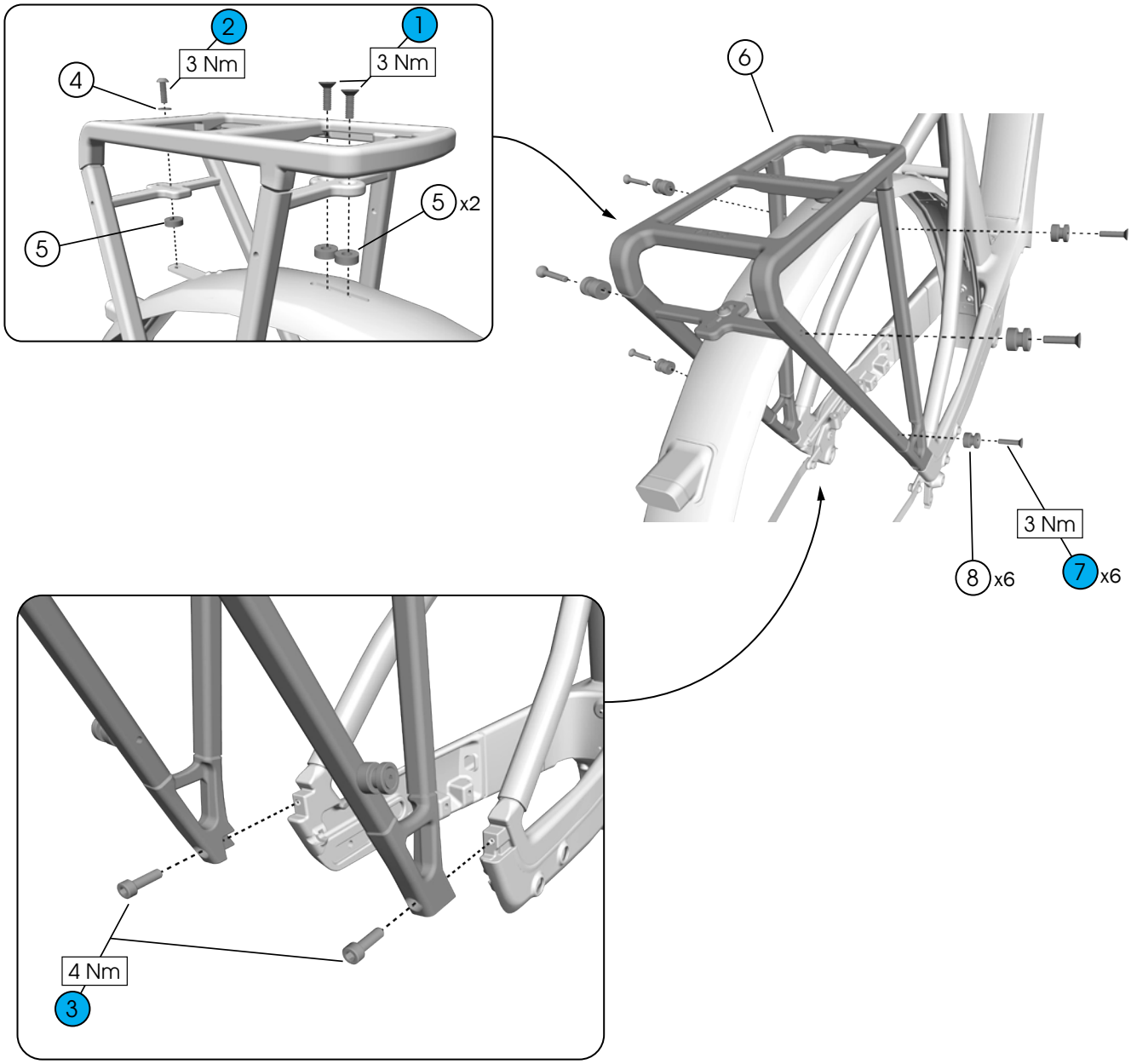

1. Fasteners (M5 x 16 mm)
2. Fastener (M5 x 16 mm)
3. Fasteners (M6 x 16 mm)
4. Washer (M5)
5. Spacers, 5 mm
6. Rack — *W5329850*

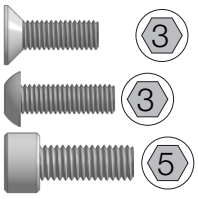

7. Fasteners (M5 x 20 mm)
8. Studs



Frame parts

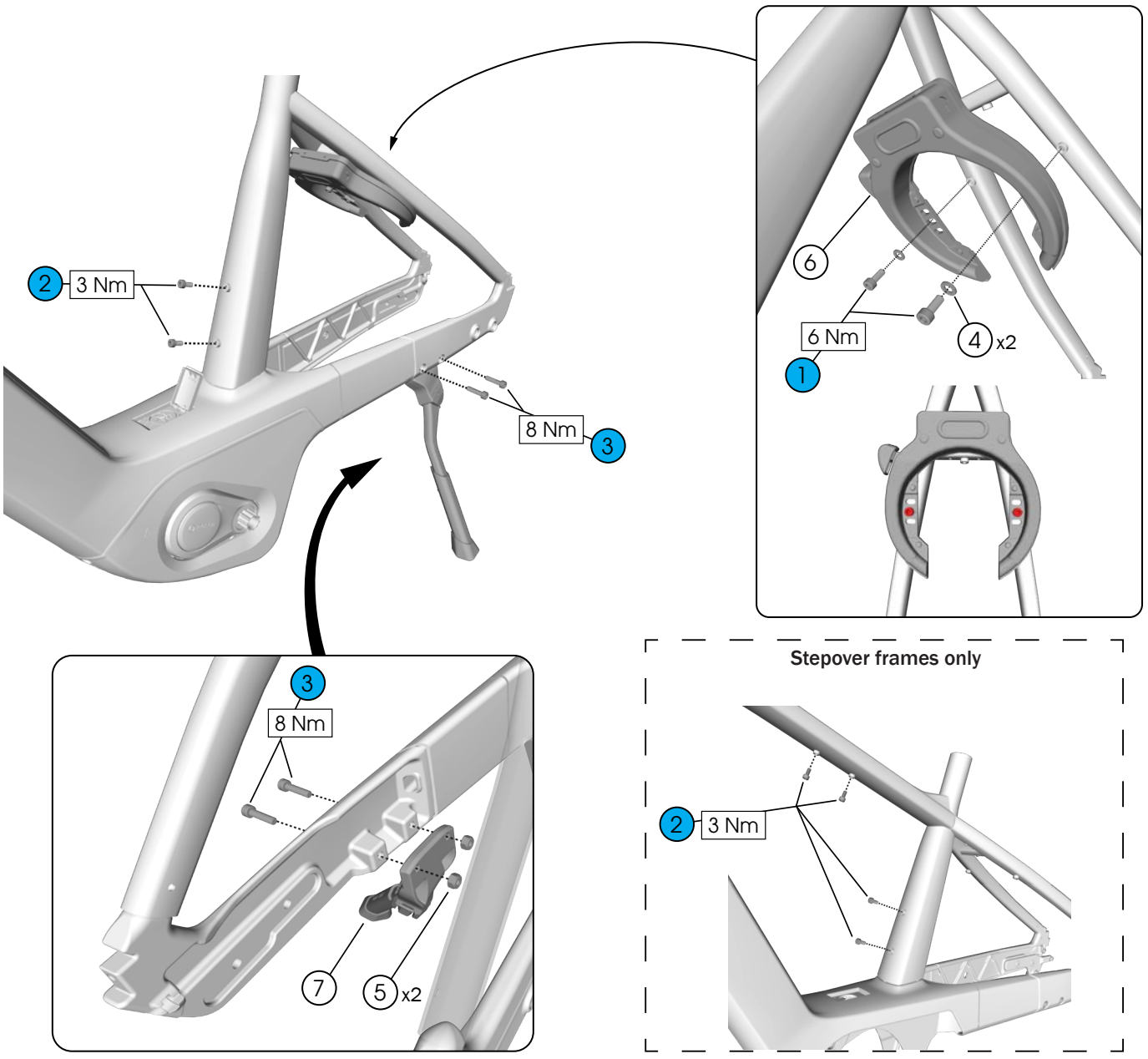

1. Fasteners (M5 x 12 mm)
2. Fasteners (M5 x 10 mm)
3. Fasteners (M6 x 25 mm)
4. Washers (M5)
5. Lock-nuts (M6)
6. Ring lock — *592162*
7. Kickstand

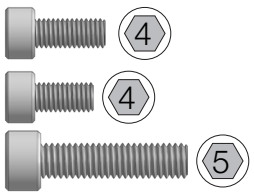

Specifications

Frame

		Charter+
Hub OLD, rear		135 mm (belt) / 142 mm (chain)
Fork steerer tube OD	Upper	28.6 mm
	Lower	38.1 mm
Brake rotor diameter min/max	Front	180/203 mm
	Rear	180/203 mm
Min chainring		40T chain / 46T belt
Max chainring		46T chain / 50T belt
Chain line		52 mm chain / 46.5 mm belt
Seatpost diameter		31.6 mm
Tire width max		2.4" / 61 mm